查询MAX1513供应商 捷多邦，专业PCB打样工厂，24小时加急出货

19-3541; Rev 0; 2/05

MAX1515 Evaluation Kit

Evaluates: MAX1515

General Description

The MAX1515 evaluation kit (EV kit) is designed to evaluate the MAX1515 constant off-time, pulse-width-modulated (PWM) source/sink step-down DC-DC converter that is optimized for use in low-voltage active-termination power solutions in notebook and subnotebook computers. The EV kit board defaults in DDR mode and accepts 1.3V to 3.6V at V_{IN}, 3.3V at V_{DD} as the bias, and 2.5V or 1.8V at VDDQ as the reference. An output voltage is produced at V_{OUT} equal to VDDQ / 2 that can sink or source 2.5A.

In non-DDR mode, the voltage at V_{OUT} is pin selectable with the following options: 1.5V, 1.8V, or 2.5V. In addition, the voltage at V_{OUT} is adjustable from 0.5V to 2.7V.

The MAX1515 EV kit is conveniently designed with jumpers to activate the feedback selection (FBSEL0, FBSEL1), reference selection ($\overline{\text{REFIN}}$), DDR mode ($\overline{\text{MODE}}$), pulse-skipping mode ($\overline{\text{SKIP}}$), and shutdown mode ($\overline{\text{SHDN}}$).

Features

- **1.3V to 3.6V V_{IN} Range**
- **V_{OUT} Range: 0.5V to 2.7V at 2.5A**
- **Pin-Selectable Output Voltages: 1.5V, 1.8V, or 2.5V at 2.5A**
- **DDR Mode Enable ($\overline{\text{MODE}}$)**
- **Forced PWM/Pulse-Skipping Selection ($\overline{\text{SKIP}}$)**
- **Optimized Switching Frequency: 500kHz**
- **Shutdown Input ($\overline{\text{SHDN}}$)**
- **Power-Good Output (PGOOD)**

Ordering Information

PART	TEMP RANGE	IC PACKAGE
MAX1515EVKIT	0°C to +70°C	24 TQFN (4mm x 4mm)

Component List

DESIGNATION	QTY	DESCRIPTION
C1	1	22µF, 6.3V X5R ceramic capacitor (0805) TDK C2012X5R0J226
C2	1	220µF, 4V, 15mΩ, 3.1A_{RMS} POSCAP (D2E) Sanyo 4TPE220MF
C3, C4, C8	3	0.01µF ±10%, 25V X7R ceramic capacitors (0402) Murata GRP155R71E103J TDK C1005X7R1E103K
C5	1	470pF ±5%, 50V C0G ceramic capacitor (0402) Murata GRP155R71H471K TDK C1005COG1H471J
C6, C7, C9, C11	4	1µF ±20%, 6.3V X5R ceramic capacitors (0402) TDK C1005X5R0J105M
C10	1	0.47µF ±20%, 6.3V X5R ceramic capacitor (0402) TDK C1005X5R0J474M
C12	1	0.01µF ±10%, 16V X7R reverse-termination ceramic capacitor (0306) TDK C0816X7R1C103K
C13	1	100µF, 4V, 35mΩ, 1.4A_{RMS} POSCAP (B2) Sanyo 4TPE100MZB
D2, D3	0	Not installed, diodes (SOD123)
L1	1	1.2µH inductor (7.6mm x 7.6mm x 3mm) Sumida CDR7D28MN-1R2
R1	1	110kΩ ±1% resistor (0402)
R2, R3	2	10kΩ ±1% resistors (0402)
R4	1	100kΩ ±5% resistor (0402)
R5	1	10Ω ±5% resistor (0402)
R6	0	Shorted trace resistor (0402)
R7	0	Not installed, resistor (0402)
U1	1	MAX1515ETG (4mm x 4mm 24-pin thin QFN)
None	6	3-pin headers
None	1	MAX1515 evaluation kit PC board

For pricing, delivery, and ordering information, please contact Maxim/Dallas Direct! at

MAX1515 Evaluation Kit

Quick Start

Recommended Equipment

- 2.5VDC power supply (2.5A rated): VIN/VDDQ
- 3.3VDC power supply: VDD
- 2 digital voltmeters (DVMs)

The MAX1515 EV kit is fully assembled and tested. Follow these steps to verify board operation. **Do not turn on the power supplies until all connections are completed:**

1) Verify the shunts are placed in the proper positions for the jumpers below:

   JU0 (2-3): FBSEL0 = GND.

   JU1 (2-3): FBSEL1 = GND. VOUT = VREFIN.

   JU2 (1-2): MODE = VCC. DDR mode enabled.

   JU3 (1-2): REFIN = VDDQ / 2.

   JU4 (1-2): $\overline{SHDN}$ = VCC. Shutdown mode disabled.

   JU5 (1-2): $\overline{SKIP}$ = VCC. Forced-PWM mode enabled.

2) Connect the 2.5VDC power supply rated for 2.5A across the VIN pad and the corresponding PGND pad.
3) Connect the 3.3VDC power supply across the VDD pad and the corresponding PGND pad.
4) Turn on both supplies: VDD = 3.3V and VIN = 2.5V. (Power-up sequence does not matter.)
5) Using a DVM, verify that the REFOUT voltage between the REFOUT and GND pads is 1.25V.
6) Using the other DVM, verify that the VOUT voltage between the VOUT and PGND pads is 1.25V.

Detailed Description

The MAX1515 EV kit is designed to evaluate the MAX1515 constant off-time, PWM source/sink step-down DC-DC converter that is optimized for use in low-voltage, active-termination power solutions in notebook and subnotebook computers.

Setting the Output Voltage in DDR Mode (VOUT = VTT)

In DDR mode, the voltage produced at VOUT is equal to REFIN (VDDQ / 2) and can sink or source 2.5A. Connect FBSEL0 and FBSEL1 to GND for DDR mode.

Setting the Output Voltage in Non-DDR Mode (VOUT)

In non-DDR mode, the voltage at VOUT is pin selectable with the following options: 1.5V, 1.8V, or 2.5V. See Table 1 for the correct FBSEL0 and FBSEL1 settings.

In addition, the voltage at VOUT is adjustable from 1.1V to 2.7V by setting the FBSEL0/FBSEL1 to GND, shorting REFIN to REF, opening the PC board short across R6, and installing R6 and R7. Calculate R6 using the following equation:

$$R6 = ((V_{OUT} / V_{REF}) - 1) \times R7$$

where V_{REF} = 1.1V, R7 = 100kΩ.

The voltage at VOUT is also adjustable from 0.5V to 1.1V by setting FBSEL0/FBSEL1 to GND and directly driving REFIN to a voltage equal to the desired voltage at VOUT. When adjusting VOUT from 0.5V to 1.1V, use the following equation:

$$V_{OUT} = V_{REFIN}$$

Table 1 shows the proper jumper configurations for setting the output voltage.

Jumper Settings

See Tables 1–5 for all jumper setting descriptions on the MAX1515 EV kit.

Table 1. Output Voltage Settings (FBSEL0/FBSEL1)

FBSEL0 JU0	FBSEL1 JU1	DESCRIPTION
2-3*	2-3*	Adjustable $V_{FB} = V_{REFIN}$
2-3	1-2	1.5V
1-2	2-3	1.8V
1-2	1-2	2.5V

** = Default position.*

Note: Refer to the MAX1515 data sheet for additional information on FBSEL0/FBSEL1.

Table 2. DDR Mode (MODE)

JUMPER	SHUNT POSITION	DESCRIPTION
JU2	1-2*	DDR mode (REFOUT is active)
	2-3	Non-DDR mode (REFOUT is disabled)

** = Default position.*

Note: Refer to the MAX1515 data sheet for additional information on MODE.

Table 3. REFIN Selection (REFIN)

JUMPER	SHUNT POSITION	DESCRIPTION
JU3	1-2*	REFIN = VDDQ / 2
	2-3	REFIN = REF

** = Default position.*

Note: Refer to the MAX1515 data sheet for additional information on REFIN.

Table 4. Shutdown Control Input ($\overline{\text{SHDN}}$)

JUMPER	SHUNT POSITION	DESCRIPTION
JU4	1-2*	The MAX1515 is in normal operation.
	2-3	The MAX1515 is in low-power shutdown. REFOUT is only in shutdown when MODE is connected to GND.

** = Default position.*

Note: Refer to the MAX1515 data sheet for additional information on $\overline{\text{SHDN}}$.

Table 5. Pulse-Skipping Control Input ($\overline{\text{SKIP}}$)

JUMPER	SHUNT POSITION	DESCRIPTION
JU5	1-2*	Low-noise forced PWM mode
	2-3	Low-power pulse-skipping mode

** = Default position.*

Note: Refer to the MAX1515 data sheet for additional information on $\overline{\text{SKIP}}$.

Component Suppliers

SUPPLIER	PHONE	WEBSITE
Murata	770-436-1300	www.murata.com
Sanyo USA	619-661-6835	www.sanyo.com
Sumida USA	847-545-6700	www.sumida.com
TDK	847-803-6100	www.component.tdk.com

Note: Indicate you are using the MAX1515 when contacting these component suppliers.

MAX1515 Evaluation Kit

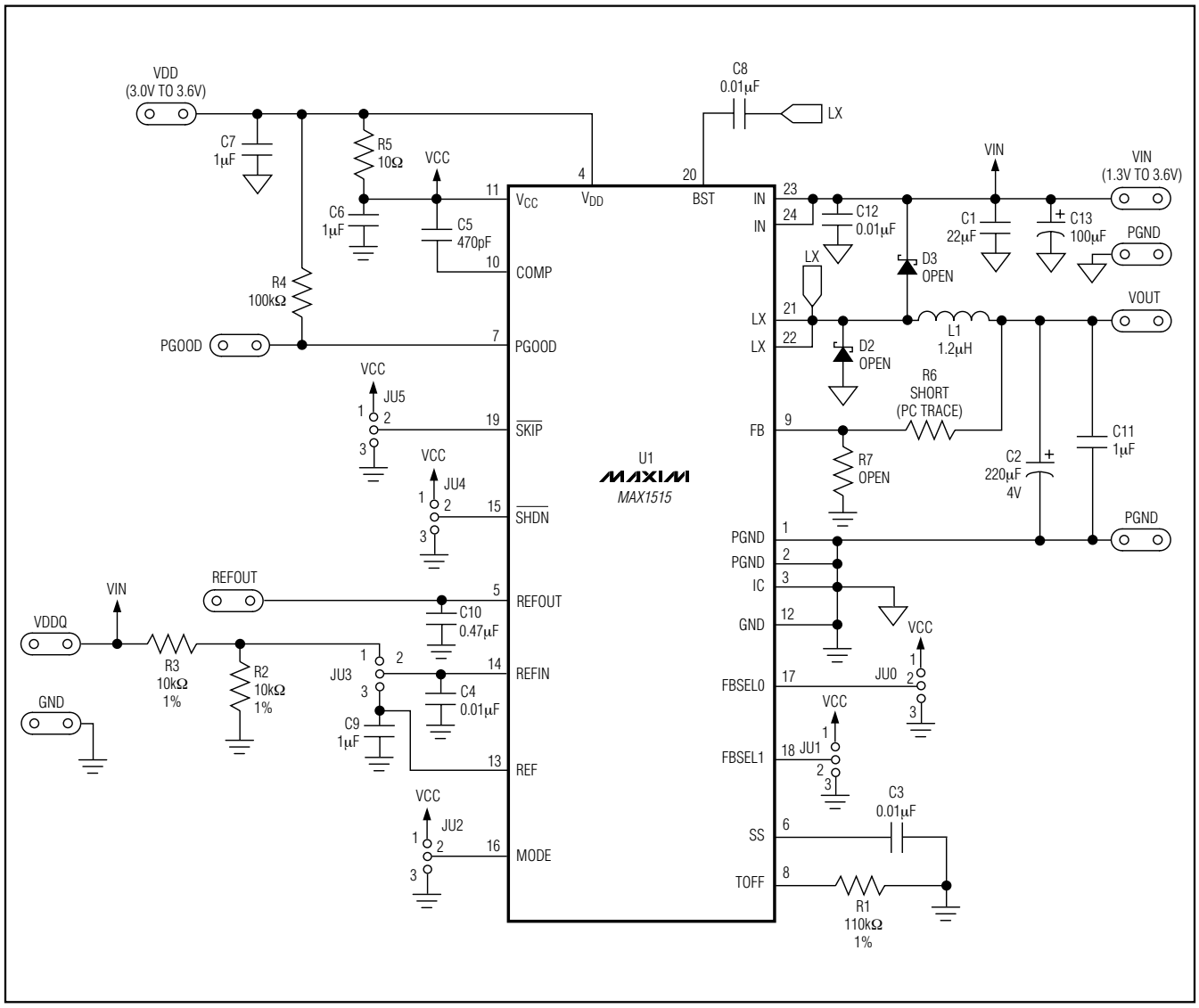

Figure 1. MAX1515 EV Kit Schematic

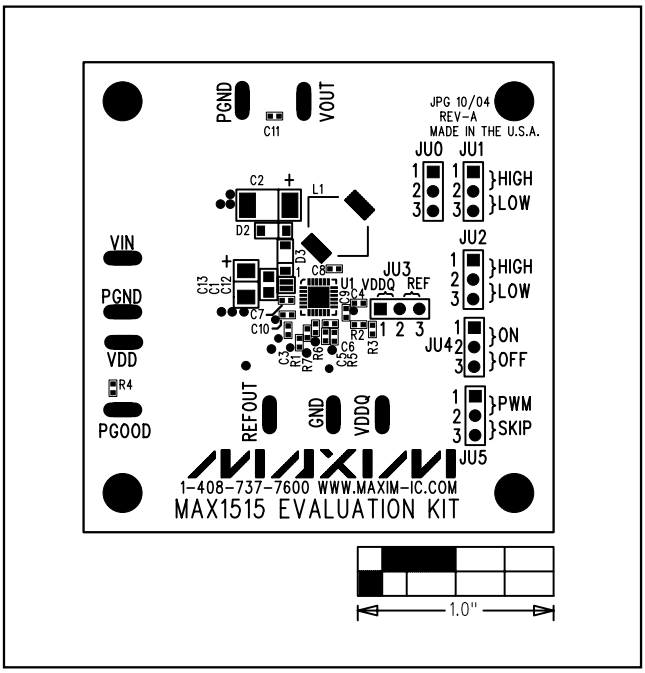

Figure 2. MAX1515 EV Kit Component Placement Guide—Component Side

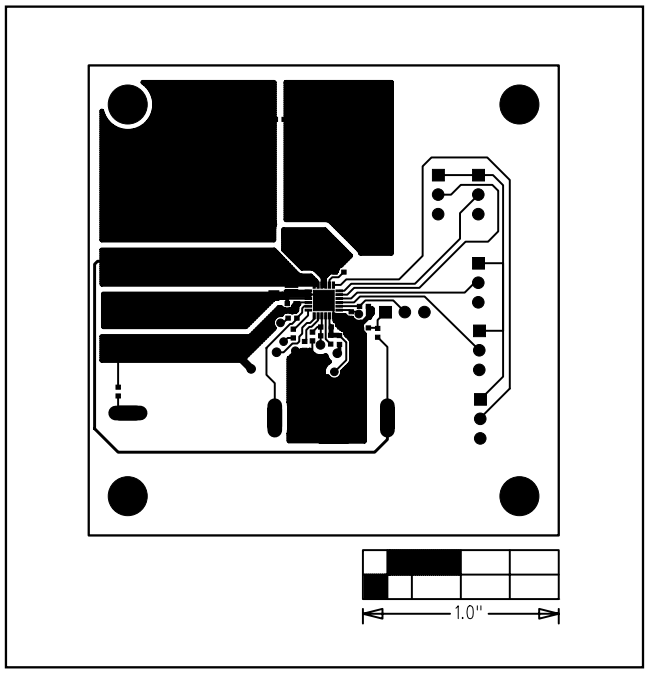

Figure 3. MAX1515 EV Kit PC Board Layout—Component Side

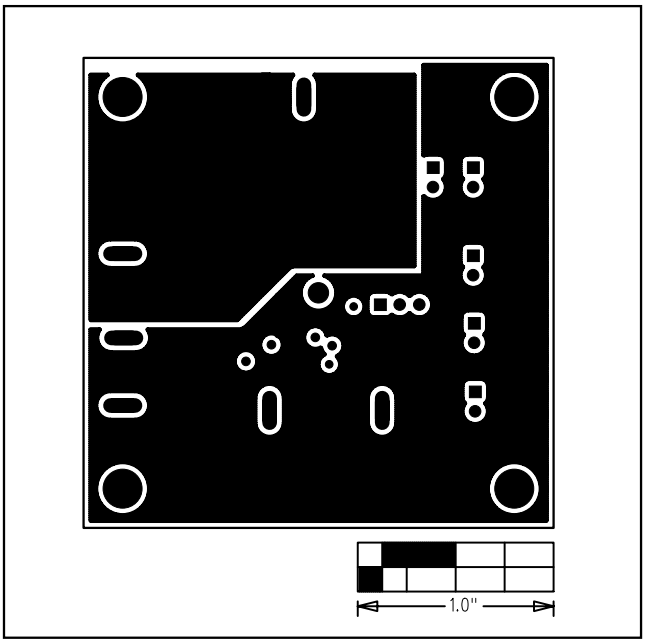

Figure 4. MAX1515 EV Kit PC Board Layout—Inner Layer 2 (GND, PGND)

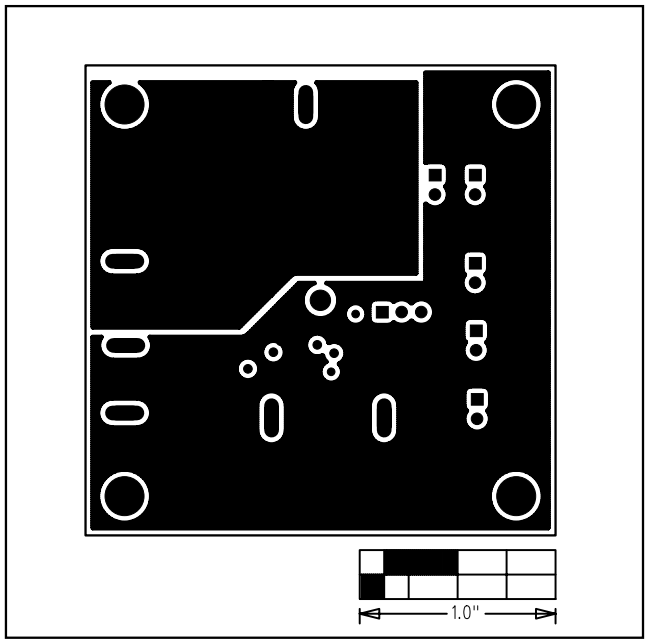

Figure 5. MAX1515 EV Kit PC Board Layout—Inner Layer 3 (GND, PGND)

MAX1515 Evaluation Kit

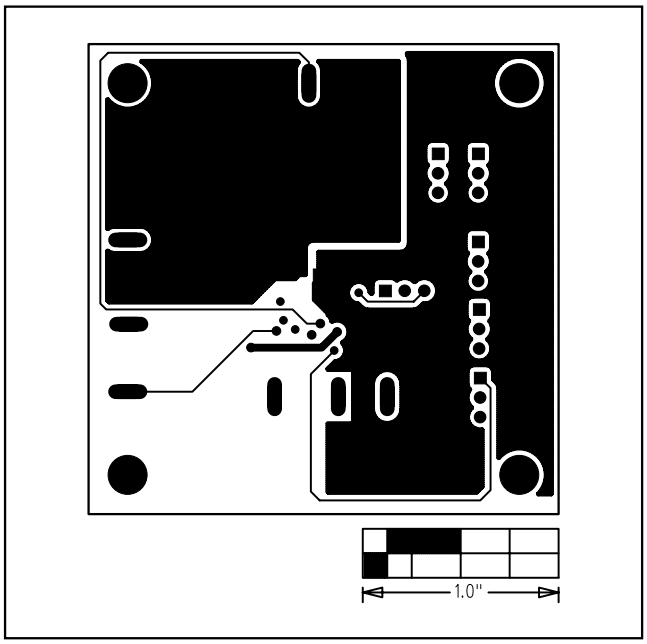

Figure 6. MAX1515 EV Kit PC Board Layout—Solder Side

Maxim cannot assume responsibility for use of any circuitry other than circuitry entirely embodied in a Maxim product. No circuit patent licenses are implied. Maxim reserves the right to change the circuitry and specifications without notice at any time.

© 2005 Maxim Integrated Products Printed USA MAXIM is a registered trademark of Maxim Integrated Products, Inc.