查询LT1328供应商 捷多邦，专业PCB打样工厂，24小时加急出货

LINEAR TECHNOLOGY

LT1328

4Mbps IrDA Infrared Receiver

FEATURES

- **SIR, FIR and 4ppm Compatible**
- **Low Frequency Ambient Rejection Loop**
- Supply Current: 2mA
- 8-Lead MSOP and SO Packages
- 5V Single Supply Operation
- Optional High Frequency Noise Rejection

APPLICATIONS

- IrDA Applications
- Sharp/Newton
- TV Remote
- Noncontact Telemetry
- Wireless Slave for Photographic Flash
- Keyless Entry
- Optical Data Transfer
- Infrared Home Control Systems

DESCRIPTION

The LT®1328 is a photodiode receiver that supports IrDA® data rates up to 4Mbps as well as other modulation methods such as Sharp ASK and TV remote control. The LT1328 MSOP contains all the necessary circuitry to convert current pulses from an external photodiode to a digital TTL output while rejecting unwanted lower frequency interference. The LT1328 plus five external components is all that is required to make an IrDA compatible receiver.

Power requirements for the LT1328 are minimal—a single 5V supply and 2mA of quiescent current. Internal high-pass filtering attenuates interfering signals such as sunlight, incandescent and fluorescent lamps and is selectable at Pin 7 for low or high data rates. The LT1328's ease of use and flexibility make it an ideal solution for numerous other photodiode receiver applications. The LT1328 is available in the SO-8 as well as the tiny MSOP for size-critical applications.

LT, LTC and LT are registered trademarks of Linear Technology Corporation.
IrDA is a registered trademark of the Infrared Data Association.

TYPICAL APPLICATIONS

IrDA Receiver

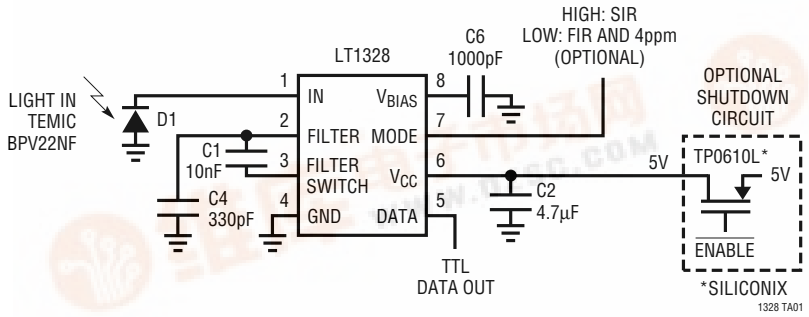

IrDA Transmitter

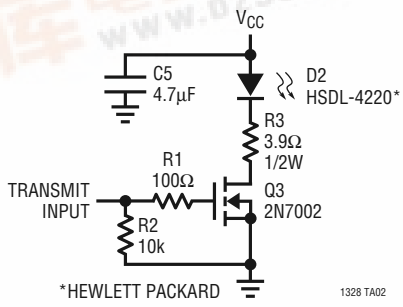

找PDF 维库一下 pdf.dzsc.com

ABSOLUTE MAXIMUM RATINGS

Total Supply Voltage (V_{CC} to GND) 6V
Differential Voltage (Any Two Pins) 6V
Operating Temperature Range ..... 0°C to 70°C
Specified Temperature Range ..... 0°C to 70°C
Maximum Junction Temperature ..... 150°C
Storage Temperature Range ..... –65°C to 150°C
Lead Temperature (Soldering, 10 sec) ..... 300°C

PACKAGE/ORDER INFORMATION

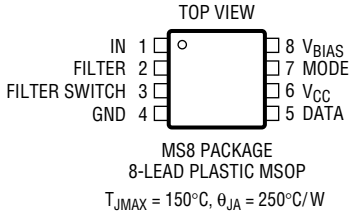

MS8 PACKAGE
8-LEAD PLASTIC MSOP
T_{JMAX} = 150°C, θ_{JA} = 250°C/W

ORDER PART NUMBER	MS8 PART MARKING
LT1328CMS8	LTBG

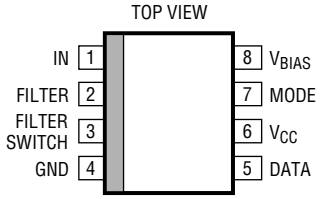

S8 PACKAGE
8-LEAD PLASTIC SO
T_{JMAX} = 150°C, θ_{JA} = 190°C/W

ORDER PART NUMBER	S8 PART MARKING
LT1328CS8	1328

Consult factory for Industrial and Military grade parts.

ELECTRICAL CHARACTERISTICS V_{CC} = 5V, V_{GND} = 0V, V_{MODE} = 2V unless otherwise specified. (Note 1)

SYMBOL	PARAMETER	CONDITIONS		MIN	TYP	MAX	UNITS
$I_{TH(MIN)}$	Minimum Input Current Pulse	Current Out of Pin 1 (SIR), Pulse Width 1.6µs, Period 8.7µs			200		nA
		Current Out of Pin 1 (FIR, 4ppm), Pulse Width 125ns, Period 500ns			600		nA
I_{PD}	Maximum Input Current	Current Out of Pin 1	●	15	30		mA
I_{REJECT}	Maximum Low Frequency Input Current	DC to 120Hz, Current Out of Pin 1			1000		µA
I_S	Supply Current	No Input Signal	●		2	3	mA
V_S	Operating Supply Voltage		●	4.5		5.5	V
V_{IN}	Bias Voltage on Pin 1	No Input Signal	●	1.0	1.5	2.0	V
V_{BIAS}	Bias Voltage on Pin 8	No Input Signal	●	1.0	1.5	2.0	V
V_{LT}	Quiescent Voltage on Pin 2	No Input Signal	●	1.0	1.5	2.0	V
V_{THL}	Switch Logic Level Low Pin 7		●			0.8	V
V_{THH}	Switch Logic Level High Pin 7		●	2.0			V
V_{OL}	Comparator Output Low	Voltage On Pin 5, 800µA Sink Current	●		0.4	0.5	V
V_{OH}	Comparator Output High	Voltage On Pin 5, 50µA Source Current	●	4.0	4.3		V

The ● denotes specifications which apply over the full operating temperature range of 0°C ≤ T_A ≤ 70°C.

Note 1: MS8 package devices are designed for and intended to meet commercial temperature range specifications but are not tested at 0°C.

TYPICAL PERFORMANCE CHARACTERISTICS

Supply Current vs Supply Voltage

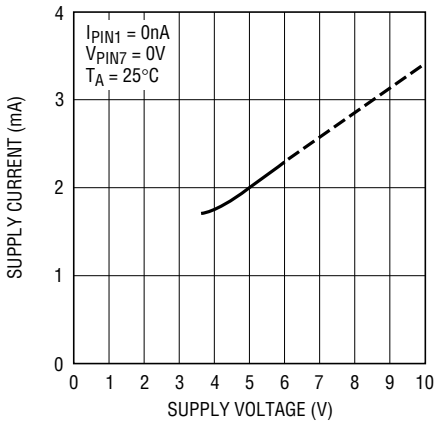

1328 G01

Change in Voltage on Pin 1 vs Supply Voltage

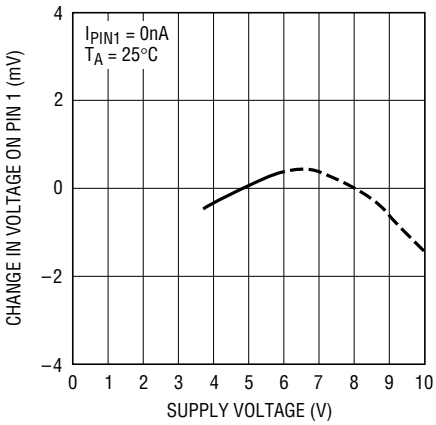

1328 G02

Change in Output Pulse Width vs Input Current Amplitude

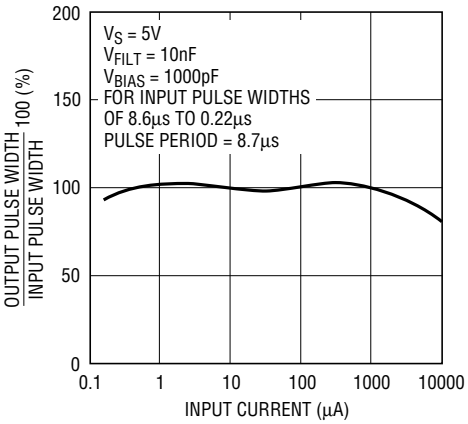

1328 G03

Change in Output Pulse Width vs Input Duty Cycle

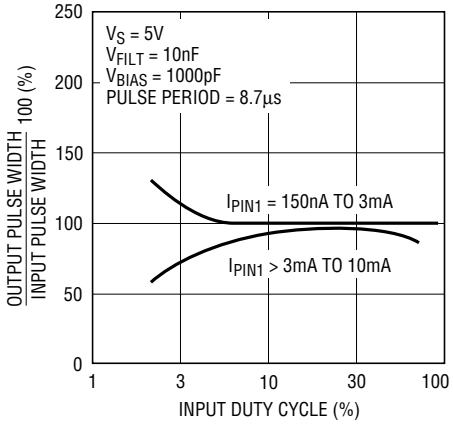

1328 G04

Change in Voltage on Pin 1 vs Current

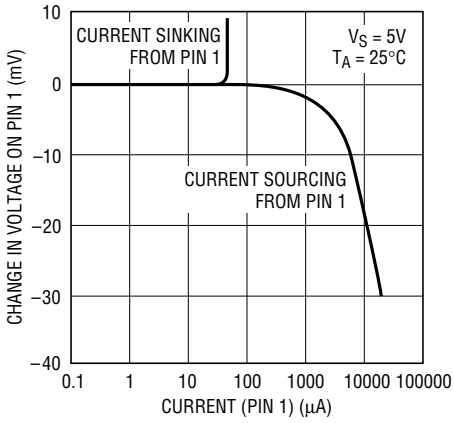

1328 G05

Change in Voltage on Pin 2 vs Current

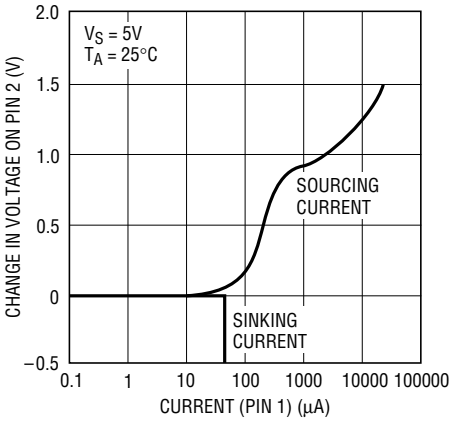

1328 G06

Peak Interfering Current vs Frequency

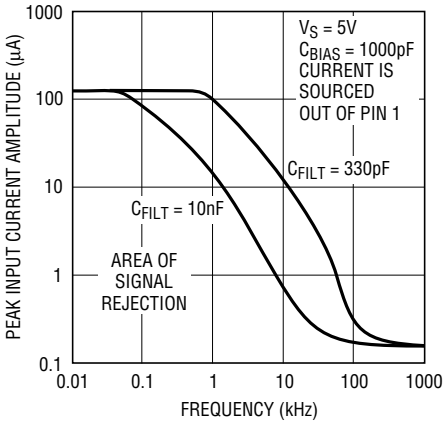

1328 G07

PIN FUNCTIONS

IN (Pin 1): Connect this pin to the photodiode cathode. This is the input to the preamplifier and is held at 1.5V by the output of the DC servo. To maintain the 1.5V on this pin, the DC servo can source up to 2mA or sink 40μA to this pin.

FILTER (Pin 2): Connect a capacitor from this pin to ground. The value of the capacitor will set the band of frequencies that will be attenuated by the servo. The pole is set by the formula $f = 25/(2\pi \bullet 60k \bullet C)$. A 330pF capacitor will attenuate photodiode signals below 200kHz when operating at high data rates (FIR and 4ppm).

FILTER SWITCH (Pin 3): Collector of a Transistor Switch. When the MODE switch (Pin 7) is TTL HIGH this pin will be switched to ground. This pin is used to increase the filter capacitor for slower data rates (SIR). A 10nF capacitor from Pin 2 to Pin 3 will bring the highpass frequency down to 6.6kHz for SIR.

GND (Pin 4): Ground.

DATA (Pin 5): TTL Output of the Comparator. A TTL LOW at this pin indicates that the photodiode has received a pulse of light. This pin will remain HIGH when the light signal and noise are below the attenuation band of the DC servo.

V_{CC} (Pin 6): 5V Supply. A bypass capacitor, connected as close as possible from Pin 6 to ground is recommended (4.7μF).

MODE (Pin 7): A TTL HIGH on this pin will cause the open collector at Pin 3 to switch to ground. This is an option that switches in extra capacitance for lower frequency data rates. If this pin is not used, select a capacitor (C4) to accommodate the lowest data rate (for IrDA C4 = 10nF).

V_{BIAS} (Pin 8): A 1000pF capacitor from this pin to ground is required.

BLOCK DIAGRAM

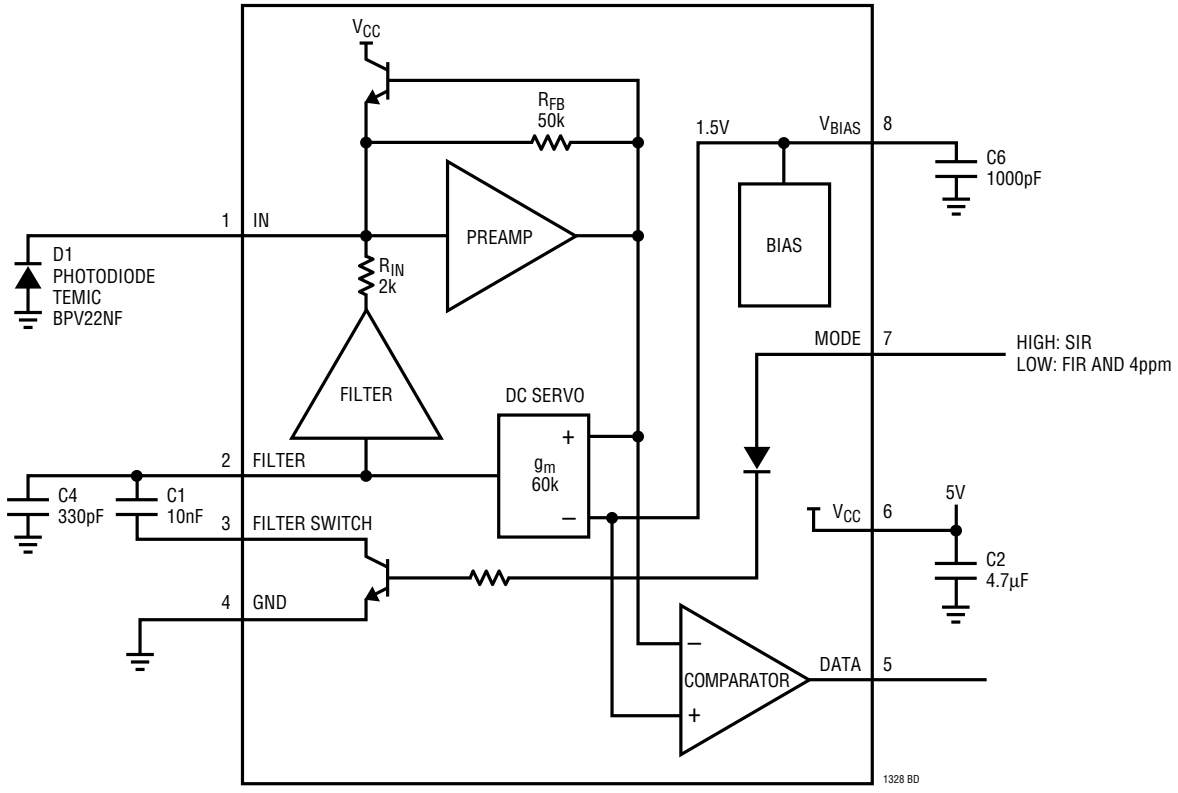

Figure 1. LT1328 Block Diagram

APPLICATIONS INFORMATION

The LT1328 is a low noise, high speed, high gain infrared receiver designed to easily provide IR communications with portable computers, PDAs, desktop computers and peripherals. The receiver takes the photodiode current from an infrared photodiode (typically Temic BPV22NF) and performs a current-to-voltage conversion. Figure 1 is a block diagram of the LT1328. Photodiode current is transformed into a voltage by feedback resistor R_{FB}. The DC level of the preamp is held at V_{BIAS} due to the servo action of the transconductance amplifier g_m. The servo action only suppresses frequencies below the R_{gm}, C_{FILT} pole.

This highpass filtering attenuates interfering signals such as sunlight, incandescent and fluorescent lamps. For higher data rates, the rejection band can be increased to include higher frequencies (Pin 7 LOW). If this option is not used, Pin 7 is grounded and Pin 3 is open. The rejection band of the filter is then determined by the lowest data rate; C4 equals 10nF for IrDA (SIR, FIR and 4ppm). The highpass filter break point is set by the capacitor from Pin 2 to ground at $f(Hz) = 25/(2\pi \bullet R_{gm} \bullet C)$ where $R_{gm} = 60k$. The 330pF capacitor in Figure 1 sets a 200kHz corner frequency and is used for data rates above 115kbps. For low data rates (115kbps and below) Pin 7 should be set to TTL HIGH which grounds Pin 3 and reduces the break frequency with the addition of the capacitor between Pins 2 and 3. A 10nF capacitor produces a 6.6kHz corner. Signals passed by the preamp/g_m amplifier combination cause the comparator output to swing low.

Performance of the LT1328 circuit in Figure 1 extends over the full 1cm to 1 meter range of the IrDA standard at the stipulated light levels. For IrDA data rates of 115kbps and below, a 1.6µs pulse width is used for a logic zero and no pulse for a logic one. Light levels are 40mW/SR to 500mW/SR.

Figure 2 shows a scope photo for a transmitter input (bottom trace) and the LT1328 output (top trace). Note that the input to the transmitter is inverted, i.e., a high at the input is light transmitted, which is a zero at the output of the transmitter (Pin 5). The MODE pin (Pin 7) should be high for these data rates.

The second fastest tier of the IrDA standard addresses 576kbps and 1.152Mbps data rates with pulse widths of 1/4 of the bit interval for zero and no pulse for one. The

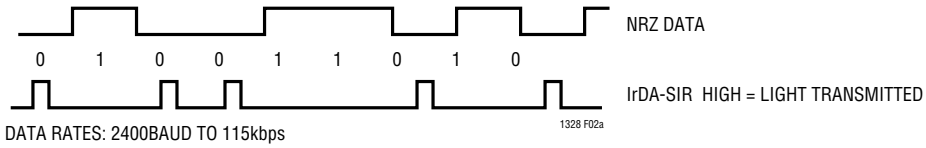

DATA RATES: 2400BAUD TO 115kbps
BIT INTERVAL: 417µs TO 8.7µs
PULSE WIDTH: 3/16 OF INTERVAL OR 1.63µs

IrDA-SIR (1m)

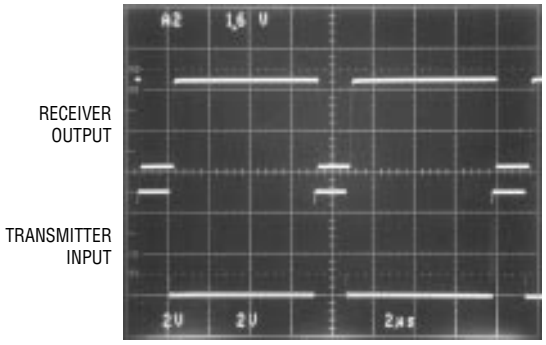

IrDA-SIR (1cm)

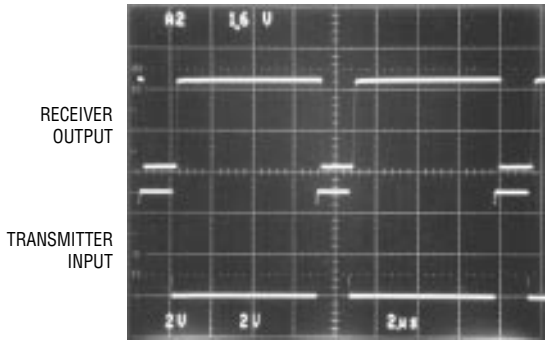

Figure 2. IrDA-SIR Modulation

APPLICATIONS INFORMATION

1.152Mbps rate, for example, uses pulses of 217ns for its bit time of 870ns. Light levels are 100mW/SR to 500mW/SR over the 1cm to 1 meter range. A photo of a transmitted input and LT1328 output is shown in Figure 3. The LT1328 output pulse width will be less than 800ns wide over all of the above conditions at 1.152Mbps. Pin 7 should be held low for these data rates and above.

The last IrDA encoding method is for 4Mbps and uses pulse position modulation, thus its name 4ppm. Two bits are encoded by the location of a 125ns wide pulse at one of the four positions within a 500ns interval (2 bits • 1/500ns = 4Mbps). Range and input levels are the same as for 1.152Mbps. Figure 4 shows the LT1328 reproduction of this modulation.

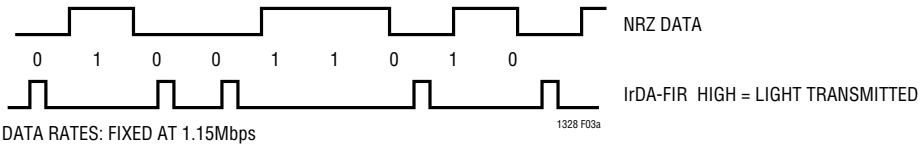

DATA RATES: FIXED AT 1.15Mbps
BIT INTERVAL: 870ns
PULSE WIDTH: 1/4 OF INTERVAL OR 217ns

IrDA-FIR (1m)

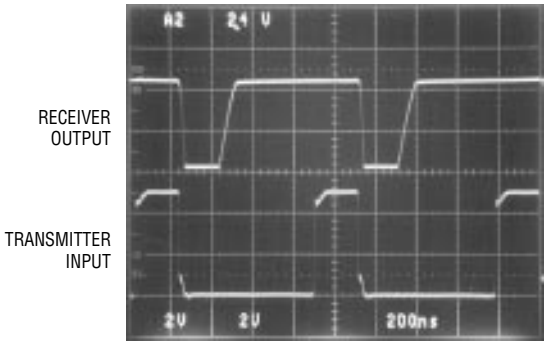

IrDA-FIR (1cm)

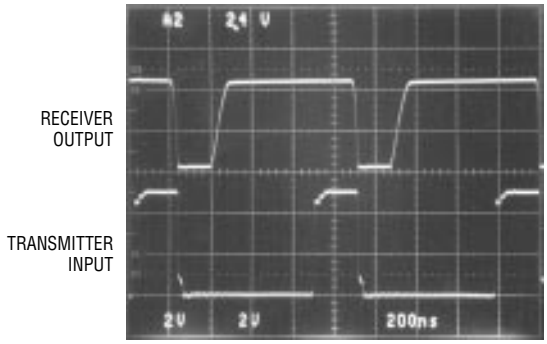

Figure 3. IrDA-FIR Modulation

DATA BIT PAIR	4ppm DATA SYMBOL
00	1000
01	0100
10	0010
11	0001

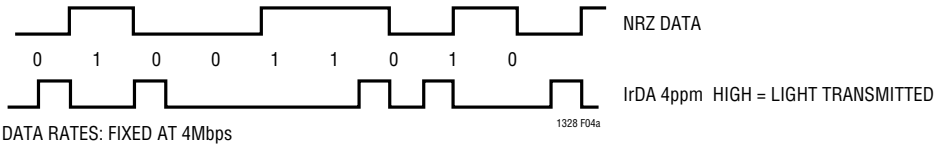

DATA RATES: FIXED AT 4Mbps
BIT INTERVAL: 500ns
PULSE WIDTH: 1/4 OF INTERVAL OR 125ns

IrDA-4ppm(1m)

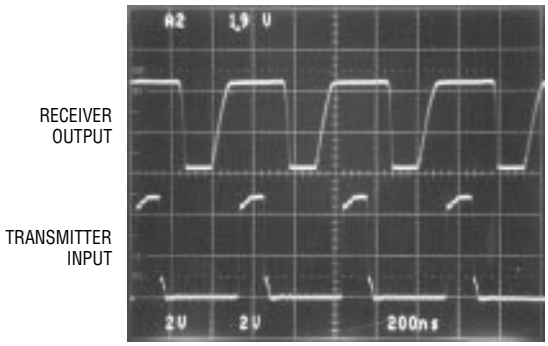

IrDA-4ppm (1cm)

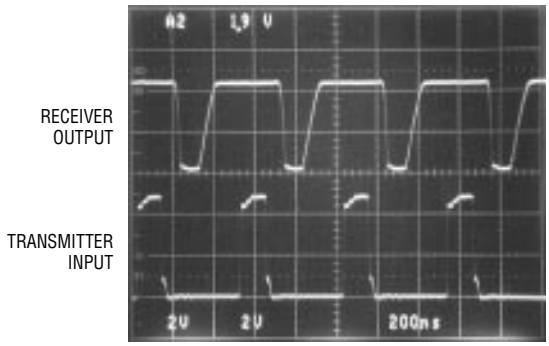

Figure 4. IrDA-4ppm

APPLICATIONS INFORMATION

In situations where long range is not a requirement, a very simple IR link can be made using unmodulated NRZ (nonreturn to zero) data. The circuit is shown in Figure 5. A BER (bit-error rate) transmitter and receiver was used to test the data-link error rates for data rates of 375kbps. Because the NRZ data can have long stretches of continuous "1" data, the low frequency corner of the LT1328 photodiode receiver is set to 14Hz to prevent pulse-top distortion.

To do this, make C1 4.7µF. This is the only change from a standard IrDA-SIR receiver. A range of 24" (with a bit error rate lower than 1 in 10^8) is achieved with no additional processing beyond that provided by the LT1328. A caution: when using unmodulated data, it is possible to get a 100% duty cycle on the LED transmitter, so be sure that the LED can handle this.

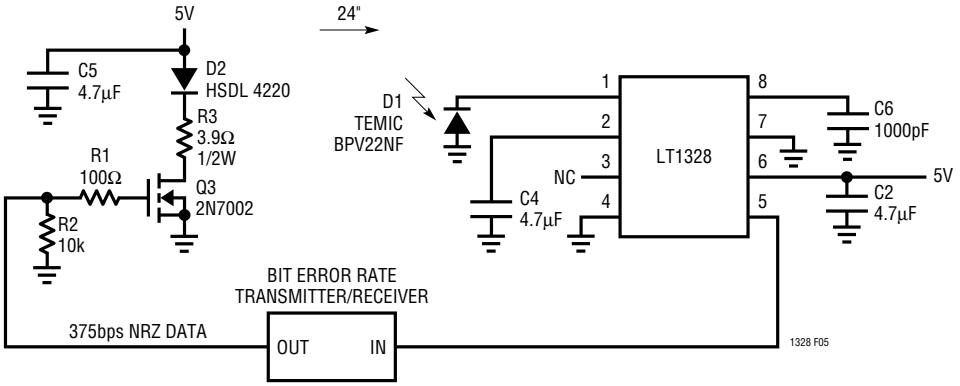

Figure 5. Simple NRZ Data Link

APPLICATIONS INFORMATION

There is one drawback to the previous scheme. Lowering the highpass frequency to 14Hz negates the normally excellent ambient light rejection of the LT1328 to line-operated light sources. By modulating the data in a very simple and inexpensive way the ambient light rejection can be maintained. The NRZ data is used to gate a 3MHz square wave before driving the transmitter. The LT1328 in FIR-4ppm mode (bandwidth of 1MHz to 4MHz) will receive the 3MHz signal. Thus, the low frequency response is no longer required and the LT1328 can be configured as a FIR receiver with no changes. Note that when in FIR/4ppm mode, the LT1328 has excellent rejection to active-ballast fluorescent lights (40kHz to 100kHz) as well as line operated bulbs. The data is recovered with two stages of retriggerable one-shots on the output of the LT1328. The first one-shot pulse length is set to 80ns and acts as an edge detector and the second one-shot pulse length is set to 2.3µs, just under a symbol period. With this modulation, the range can be extended to over 30" and still have a bit error rate lower than 1 in 10^8.

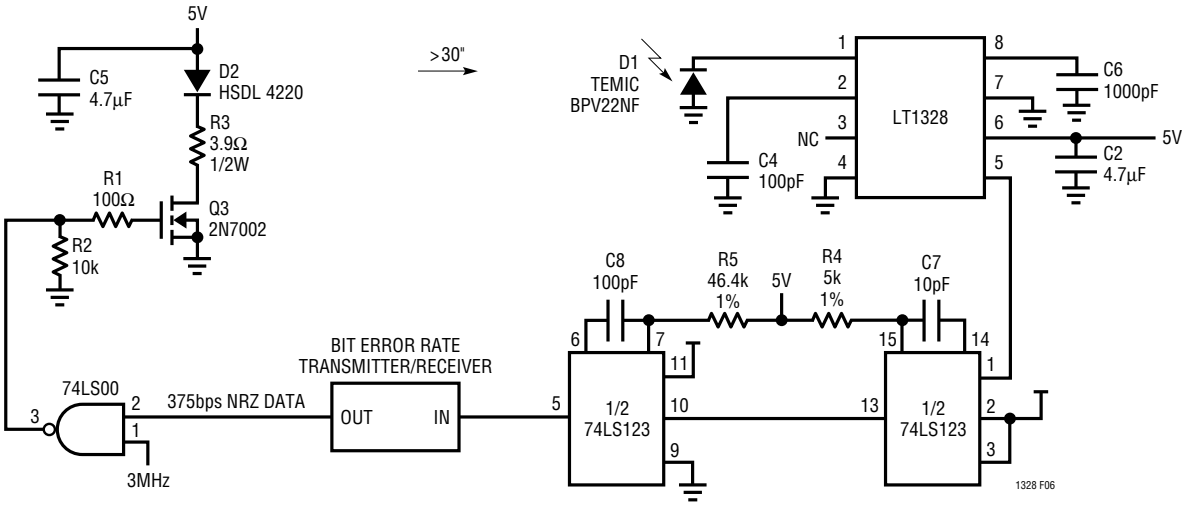

Figure 6. Simple Data Link with Improved Low Frequency Noise Rejection

TYPICAL APPLICATIONS

Wireless Slave for Photographic Flash

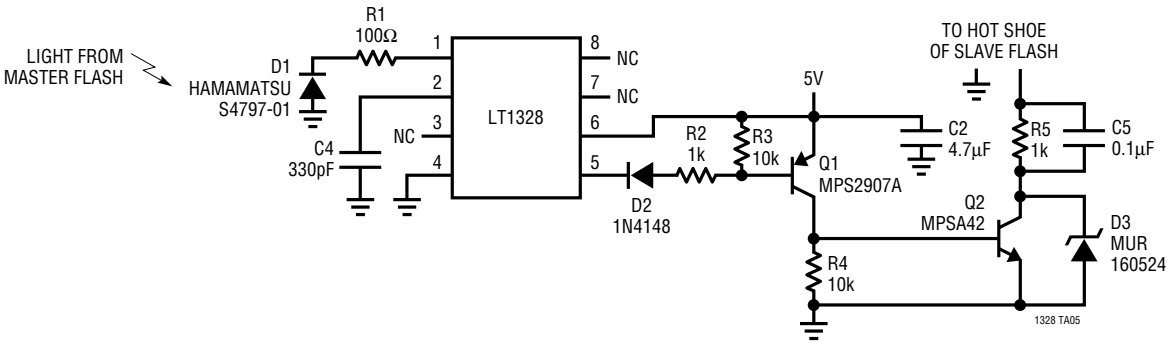

TYPICAL APPLICATIONS

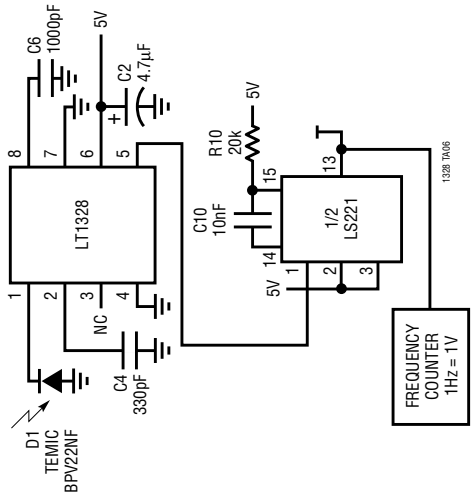

Noncontact Voltmeter

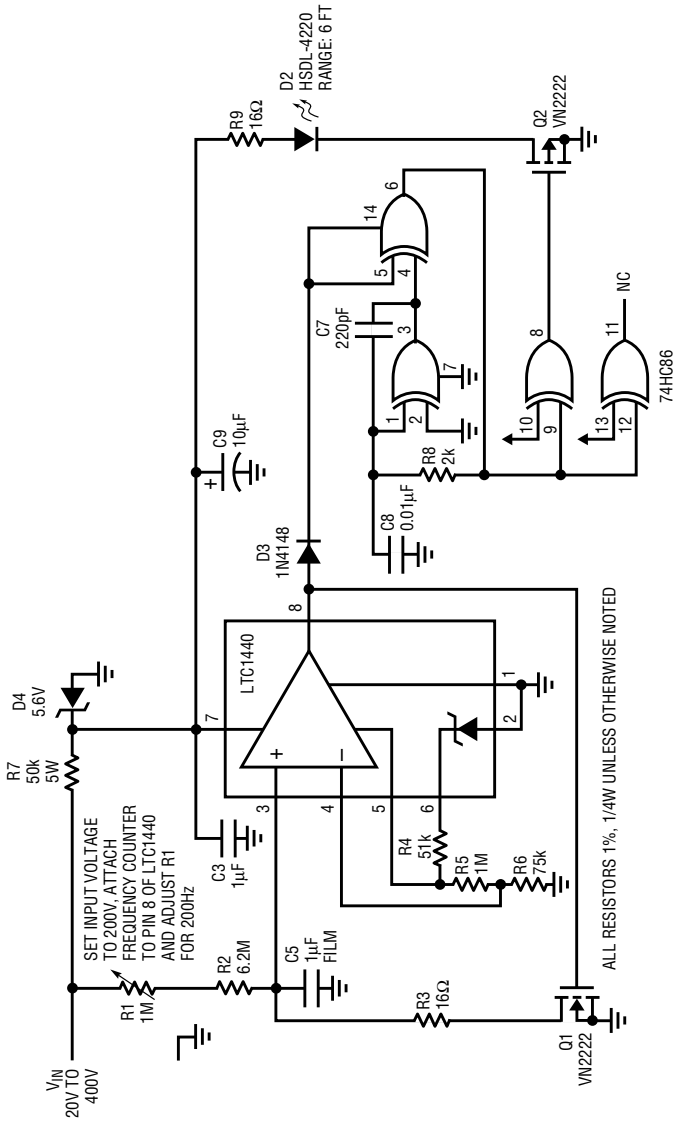

PACKAGE DESCRIPTION

Dimensions in inches (millimeters) unless otherwise noted.

MS8 Package
8-Lead Plastic MSOP
(LTC DWG # 05-08-1660)

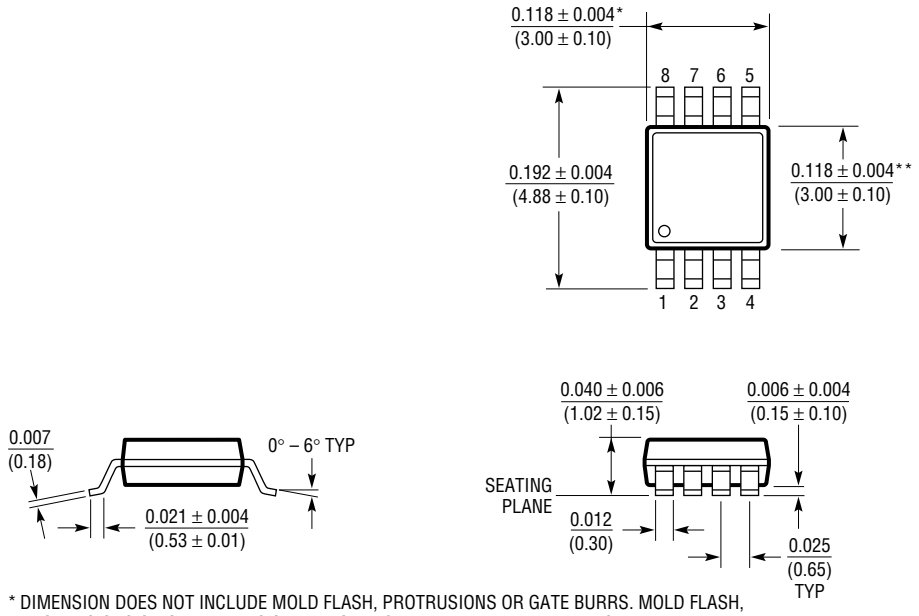

* DIMENSION DOES NOT INCLUDE MOLD FLASH, PROTRUSIONS OR GATE BURRS. MOLD FLASH, PROTRUSIONS OR GATE BURRS SHALL NOT EXCEED 0.006" (0.152mm) PER SIDE

** DIMENSION DOES NOT INCLUDE INTERLEAD FLASH OR PROTRUSIONS. INTERLEAD FLASH OR PROTRUSIONS SHALL NOT EXCEED 0.006" (0.152mm) PER SIDE

MSOP08 0596

PACKAGE DESCRIPTION

Dimensions in inches (millimeters) unless otherwise noted.

S8 Package
8-Lead Plastic Small Outline (Narrow 0.150)
(LTC DWG # 05-08-1610)

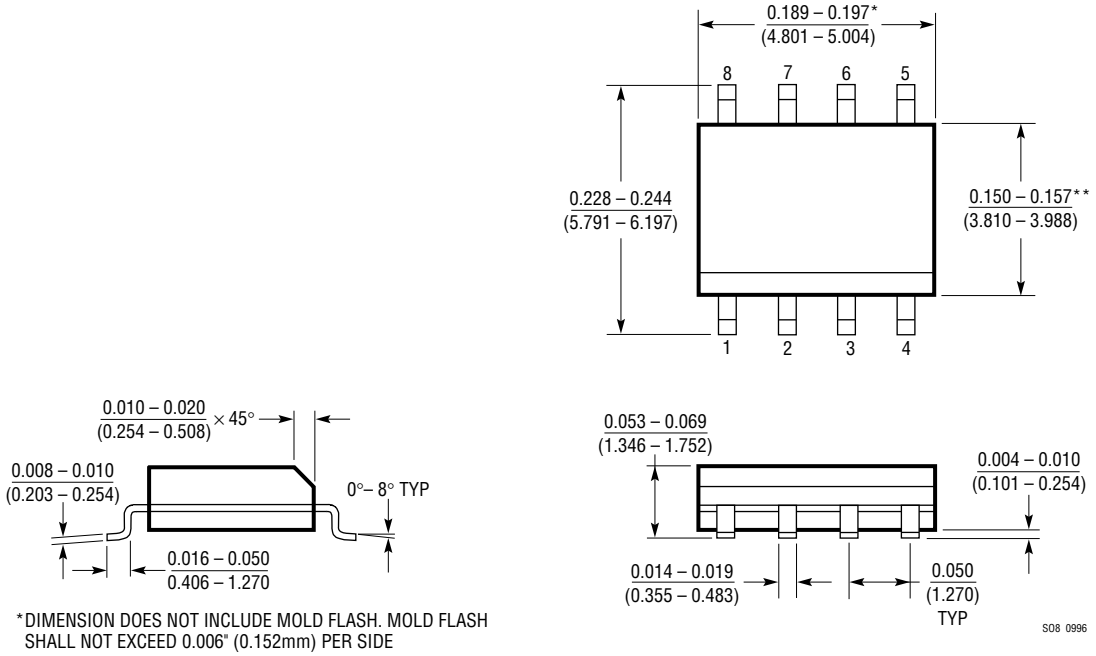

*DIMENSION DOES NOT INCLUDE MOLD FLASH. MOLD FLASH SHALL NOT EXCEED 0.006" (0.152mm) PER SIDE

**DIMENSION DOES NOT INCLUDE INTERLEAD FLASH. INTERLEAD FLASH SHALL NOT EXCEED 0.010" (0.254mm) PER SIDE

TYPICAL APPLICATIONS

IrDA Receiver

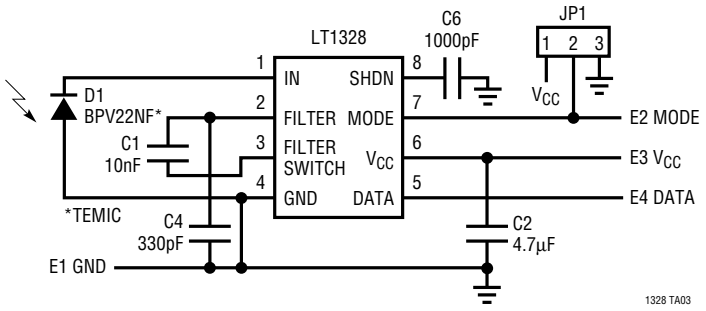

IrDA Transmitter

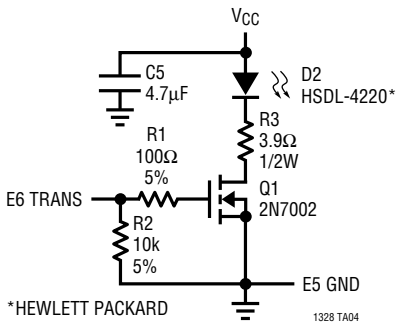

RELATED PARTS

PART NUMBER	DESCRIPTION	COMMENTS
LT1016	UltraFast™ Precision Comparator	10ns Prop Delay
LT1116	Single Supply, Ground Sensing Comparator	12ns Prop Delay
LT1319	Multiple Modulation Standard Infrared Receiver	Supports IrDA, SIR and FIR, Sharp/Newton and TV Remote
LT1361	Dual 4mA, 50MHz, 800V/µs Op Amp	C-Load™ Op Amp Stable with All Capacitive Loads

UltraFast and C-Load are trademarks of Linear Technology Corporation.