查询ISL8391IB供应商 捷多邦，专业PCB打样工厂，24小时加急出货

Data Sheet June 2003 FN6039.1

Low-Voltage, Single and Dual Supply, Quad SPST, Analog Switches

The Intersil ISL8391–ISL8393 devices are CMOS, precision, quad analog switches designed to operate from a single +2V to +12V supply or from a ±2V to ±6V supply. Targeted applications include battery powered equipment that benefit from the devices' low power consumption (<1µW), low leakage currents (2.5nA max), and fast switching speeds (t_{ON} = 60ns, t_{OFF} = 30ns). A 4Ω maximum R_{ON} flatness ensures signal fidelity, while channel-to-channel mismatch is guaranteed to be less than 2Ω.

The ISL8391, ISL8392, and ISL8393 are quad single-pole/single-throw (SPST) devices. The ISL8391 has four normally closed (NC) switches; the ISL8392 has four normally open (NO) switches; the ISL8393 has two NO and two NC switches and can be used as a dual SPDT, or a dual 2:1 multiplexer.

Table 1 summarizes the performance of this family. For higher performance, pin compatible versions, see the ISL43143-5 data sheet.

TABLE 1. FEATURES AT A GLANCE

	ISL8391	ISL8392	ISL8393
Number of Switches	4	4	4
Configuration	All NC	All NO	2 NC/2 NO
±5V R_{ON}	20Ω	20Ω	20Ω
±5V t_{ON}/t_{OFF}	60ns/30ns	60ns/30ns	60ns/30ns
5V R_{ON}	30Ω	30Ω	30Ω
5V t_{ON}/t_{OFF}	85ns/25ns	85ns/25ns	85ns/25ns
3V R_{ON}	83Ω	83Ω	83Ω
3V t_{ON}/t_{OFF}	140ns/55ns	140ns/55ns	140ns/55ns
Packages	16 Ld SOIC (N)		

Features

- Pin Compatible Replacements for MAX391 - MAX393
- Four Separately Controlled SPST Switches
- Pin Compatible with DG411, DG412, DG413
- ON Resistance (R_{ON}) . . . . . 20Ω(Typ) 35Ω(Max)
- R_{ON} Matching Between Channels. . . . . <1Ω
- Low Power Consumption (P_D) . . . . . <1µW
- Low Leakage Current (Max at 85°C) 2.5nA
- Fast Switching Action
  - t_{ON} 60ns
  - t_{OFF} 30ns
- Minimum 2000V ESD Protection per Method 3015.7
- TTL, CMOS Compatible

Applications

- Battery Powered, Handheld, and Portable Equipment
  - Barcode Scanners
  - Laptops, Notebooks, Palmtops
- Communications Systems
  - Radios
  - Base Stations
  - RF "Tee" Switches
- Test Equipment
  - Ultrasound
  - CAT/PET SCAN
  - Electrocardiograph
- Audio and Video Switching
- General Purpose Circuits
  - +3V/+5V DACs and ADCs
  - Digital Filters
  - Operational Amplifier Gain Switching Networks
  - High Frequency Analog Switching
  - High Speed Multiplexing

Related Literature

- Technical Brief TB363 "Guidelines for Handling and Processing Moisture Sensitive Surface Mount Devices (SMDs)"
- Application Note AN557 "Recommended Test Procedures for Analog Switches"

找PDF 维库一下 pdf.dzsc.com

CAUTION: These devices are sensitive to electrostatic discharge; follow proper IC Handling Procedures.

Pinouts (Note 1)

ISL8391 (SOIC)
TOP VIEW

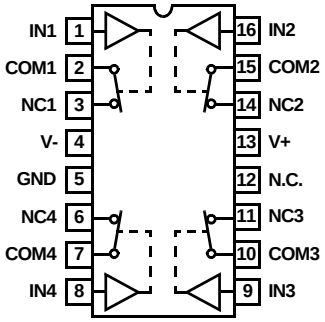

ISL8392 (SOIC)
TOP VIEW

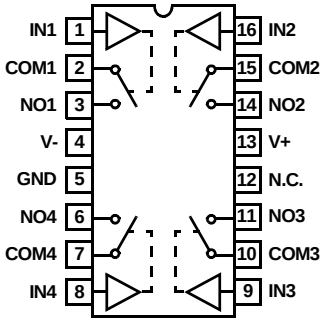

ISL8393 (SOIC)
TOP VIEW

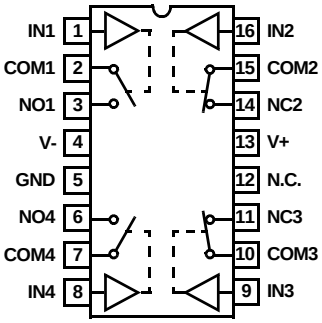

NOTE:

1. Switches Shown for Logic “0” Input.

Truth Table

LOGIC	ISL8391	ISL8392	ISL8393	
	SW 1, 2, 3, 4	SW 1, 2, 3, 4	SW 1, 4	SW 2, 3
0	On	Off	Off	On
1	Off	On	On	Off

NOTE: Logic “0” ≤ 0.8V. Logic “1” ≥ 2.4V.

Pin Descriptions

PIN	FUNCTION
V+	Positive Power Supply Input
V-	Negative Power Supply Input. Connect to GND for Single Supply Configurations.
GND	Ground Connection
IN	Digital Control Input
COM	Analog Switch Common Pin
NO	Analog Switch Normally Open Pin
NC	Analog Switch Normally Closed Pin
N.C.	No Internal Connection

Ordering Information

PART NO. (BRAND) (NOTE 2)	TEMP. RANGE (^{o}C)	PACKAGE	PKG. DWG. #
ISL8391IB	-40 to 85	16 Ld SOIC (N)	M16.15
ISL8392IB	-40 to 85	16 Ld SOIC (N)	M16.15
ISL8393IB	-40 to 85	16 Ld SOIC (N)	M16.15

NOTES:

2. Most surface mount devices are available on tape and reel; add “-T” to suffix.

Absolute Maximum Ratings

V+ to V- . . . . . -0.3 to15V
V+ to GND . . . . . -0.3 to15V
V- to GND . . . . . -15 to 0.3V
All Other Pins (Note 3) . . . . . ((V-) - 0.3V) to ((V+) + 0.3V)
Continuous Current (Any Terminal) 30mA
Peak Current, IN, NO, NC, or COM
(Pulsed 1ms, 10% Duty Cycle, Max) 100mA
ESD Rating (Per MIL-STD-883 Method 3015). . . . . .>2kV

Operating Conditions

Temperature Range
ISL839XIX . . . . . -40°C to 85°C

Thermal Information

Thermal Resistance (Typical, Note 4) θ_{JA} (^{o}C/W)
16 Ld SOIC Package 115
Maximum Junction Temperature (Plastic Package) . . . . . 150°C
Moisture Sensitivity (See Technical Brief TB363)
All Packages . . . . . Level 1
Maximum Storage Temperature Range. . . . . -65°C to 150°C
Maximum Lead Temperature (Soldering 10s) . . . . . 300°C
(Lead Tips Only)

CAUTION: Stresses above those listed in "Absolute Maximum Ratings" may cause permanent damage to the device. This is a stress only rating and operation of the device at these or any other conditions above those indicated in the operational sections of this specification is not implied.

NOTES:

3. Signals on NC, NO, COM, or IN exceeding V+ or V- are clamped by internal diodes. Limit forward diode current to maximum current ratings.
4. θ_{JA} is measured with the component mounted on a high effective thermal conductivity test board in free air. See Tech Brief TB379 for details.

Electrical Specifications: ±5V Supply

Test Conditions: V_{SUPPLY} = ±4.5V to ±5.5V, GND = 0V, V_{INH} = 2.4V, V_{INL} = 0.8V (Note 5), Unless Otherwise Specified

PARAMETER	TEST CONDITIONS	TEMP (^{o}C)	(NOTE 6) MIN	TYP	(NOTE 6) MAX	UNITS
ANALOG SWITCH CHARACTERISTICS						
Analog Signal Range, V_{ANALOG}		Full	V-	-	V+	V
ON Resistance, R_{ON}	V_S = ±4.5V, I_{COM} = 10mA, V_{NO} or V_{NC} = ±3.5V, (See Figure 5)	25	-	20	35	Ω
		Full	-	-	45	Ω
R_{ON} Matching Between Channels, ΔR_{ON}	V_S = ±5V, I_{COM} = 10mA, V_{NO} or V_{NC} = ±3V	25	-	0.3	2	Ω
		Full	-	-	4	Ω
R_{ON} Flatness, $R_{FLAT(ON)}$	V_S = ±5V, I_{COM} = 10mA, V_{NO} or V_{NC} = ±3V, 0V, (Note 8)	25	-	-	4	Ω
		Full	-	-	6	Ω
NO or NC OFF Leakage Current, $I_{NO(OFF)}$ or $I_{NC(OFF)}$	V_S = ±5.5V, V_{COM} = ±4.5V, V_{NO} or V_{NC} = ∓4.5V, (Note 7)	25	-0.1	-	0.1	nA
		Full	-2.5	-	2.5	nA
COM OFF Leakage Current, $I_{COM(OFF)}$	V_S = ±5.5V, V_{COM} = ±4.5V, V_{NO} or V_{NC} = ∓4.5V, (Note 7)	25	-0.1	-	0.1	nA
		Full	-2.5	-	2.5	nA
COM ON Leakage Current, $I_{COM(ON)}$	V_S = ±5.5V, V_{COM} = V_{NO} or V_{NC} = ±4.5V, (Note 7)	25	-0.2	-	0.2	nA
		Full	-5	-	5	nA
DIGITAL INPUT CHARACTERISTICS						
Input Voltage High, V_{INH}		Full	2.4	-	-	V
Input Voltage Low, V_{INL}		Full	-	-	0.8	V
Input Current, I_{INH}, I_{INL}	V_S = ±5.5V, V_{IN} = 0V or V+	Full	-0.5	-	0.5	µA
DYNAMIC CHARACTERISTICS						
Turn-ON Time, t_{ON}	V_S = ±4.5V, V_{NO} or V_{NC} = ±3V, R_L = 300Ω, C_L = 35pF, V_{IN} = 0 to 3V, (See Figure 1)	25	-	60	130	ns
		Full	-	-	175	ns
Turn-OFF Time, t_{OFF}	V_S = ±4.5V, V_{NO} or V_{NC} = ±3V, R_L = 300Ω, C_L = 35pF, V_{IN} = 0 to 3V, (See Figure 1)	25	-	30	75	ns
		Full	-	-	100	ns
Break-Before-Make Time Delay (ISL8393), t_D	V_S = ±5.5V, V_{NO} or V_{NC} = ±3V, R_L = 300Ω, C_L = 35pF, V_{IN} = 0 to 3V, (See Figure 3)	25	5	10	-	ns

Electrical Specifications: ±5V Supply

Test Conditions: V_{SUPPLY} = ±4.5V to ±5.5V, GND = 0V, V_{INH} = 2.4V, V_{INL} = 0.8V (Note 5), Unless Otherwise Specified **(Continued)**

PARAMETER	TEST CONDITIONS	TEMP (°C)	(NOTE 6) MIN	TYP	(NOTE 6) MAX	UNITS
Charge Injection, Q	C_L = 1.0nF, V_G = 0V, R_G = 0Ω, (See Figure 2)	25	-	-	5	pC
COM ON Capacitance, $C_{COM(ON)}$	f = 1MHz, V_{NO} or V_{NC} = V_{COM} = 0V, (See Figure 7)	25	-	34	-	pF
OFF Isolation	R_L = 50Ω, C_L = 15pF, f = 1MHz, V_{NO} or V_{NC} = $1V_{RMS}$, (See Figures 4 and 6)	25	-	71	-	dB
Crosstalk, (Note 9)		25	-	-89	-	dB
POWER SUPPLY CHARACTERISTICS						
Power Supply Range		Full	±2	-	±6	V
Positive Supply Current, I+	V_S = ±5.5V, V_{IN} = 0V or V+, Switch On or Off	25	-1	0.01	1	µA
		Full	-1	-	1	µA
Negative Supply Current, I-		25	-1	0.01	1	µA
		Full	-1	-	1	µA

NOTES:

5. V_{IN} = Input voltage to perform proper function.
6. The algebraic convention, whereby the most negative value is a minimum and the most positive a maximum, is used in this data sheet.
7. Leakage parameter is 100% tested at high temp, and guaranteed by correlation at 25°C.
8. Flatness is defined as the delta between the maximum and minimum R_{ON} values over the specified voltage range. Flatness specifications are guaranteed only with specified voltages.
9. Between any two switches.

Electrical Specifications: 5V Supply

Test Conditions: V+ = +4.5V to +5.5V, V- = GND = 0V, V_{INH} = 2.4V, V_{INL} = 0.8V (Note 5), Unless Otherwise Specified

PARAMETER	TEST CONDITIONS	TEMP (°C)	MIN (NOTE 6)	TYP	MAX (NOTE 6)	UNITS
ANALOG SWITCH CHARACTERISTICS						
Analog Signal Range, V_{ANALOG}		Full	0	-	V+	V
ON Resistance, R_{ON}	V+ = 4.5V, I_{COM} = 1.0mA, V_{NO} or V_{NC} = 3.5V, (See Figure 5)	25	-	30	60	Ω
		Full	-	-	75	Ω
R_{ON} Matching Between Channels, ΔR_{ON}	V+ = 5V, I_{COM} = 1.0mA, V_{NO} or V_{NC} = 3V	25	-	0.8	2	Ω
		Full	-	-	4	Ω
R_{ON} Flatness, $R_{FLAT(ON)}$	V+ = 5V, I_{COM} = 1.0mA, V_{NO} or V_{NC} = 1V, 3V, (Note 8)	25	-	-	6	Ω
		Full	-	-	8	Ω
NO or NC OFF Leakage Current, $I_{NO(OFF)}$ or $I_{NC(OFF)}$	V+ = 5.5V, V_{COM} = 1V, 4.5V, V_{NO} or V_{NC} = 4.5V, 1V, (Note 7)	25	-0.1	-	0.1	nA
		Full	-2.5	-	2.5	nA
COM OFF Leakage Current, $I_{COM(OFF)}$	V+ = 5.5V, V_{COM} = 1V, 4.5V, V_{NO} or V_{NC} = 4.5V, 1V, (Note 7)	25	-0.1	-	0.1	nA
		Full	-2.5	-	2.5	nA
COM ON Leakage Current, $I_{COM(ON)}$	V+ = 5.5V, V_{COM} = 1V, 4.5V, (Note 7)	25	-0.2	-	0.2	nA
		Full	-5.0	-	5.0	nA
DYNAMIC CHARACTERISTICS						
Turn-ON Time, t_{ON}	V+ = 5V, V_{NO} or V_{NC} = 3V, R_L = 300Ω, C_L = 35pF, V_{IN} = 0 to 3V, (See Figure 1)	25	-	85	170	ns
		Full	-	-	240	ns
Turn-OFF Time, t_{OFF}	V+ = 5V, V_{NO} or V_{NC} = 3V, R_L = 300Ω, C_L = 35pF, V_{IN} = 0 to 3V, (See Figure 1)	25	-	25	50	ns
		Full	-	-	100	ns

Electrical Specifications: 5V Supply

Test Conditions: V+ = +4.5V to +5.5V, V- = GND = 0V, V_{INH} = 2.4V, V_{INL} = 0.8V (Note 5), Unless Otherwise Specified **(Continued)**

PARAMETER	TEST CONDITIONS	TEMP (^oC)	MIN (NOTE 6)	TYP	MAX (NOTE 6)	UNITS
Break-Before-Make Time Delay (ISL8393), t_D	V+ = 5.5V, V_{NO} or V_{NC} = 3V, R_L = 300Ω, C_L = 35pF, V_{IN} = 0 to 3V, (See Figure 3)	25	10	-	-	ns
Charge Injection, Q	C_L = 1.0nF, V_G = 0V, R_G = 0Ω, (See Figure 2)	25	-	1	5	pC
POWER SUPPLY CHARACTERISTICS						
Positive Supply Current, I+	V+ = 5.5V, V_{IN} = 0V or V+, Switch On or Off	25	-1	0.01	1	µA
		Full	-1	-	1	µA
Negative Supply Current, I-		25	-1	0.01	1	µA
		Full	-1	-	1	µA

Electrical Specifications - 3.3V Supply

Test Conditions: V+ = +3.0V to +3.6V, V- = GND = 0V, V_{INH} = 2.4V, V_{INL} = 0.8V (Note 5), Unless Otherwise Specified

PARAMETER	TEST CONDITIONS	TEMP (^oC)	MIN (NOTE 6)	TYP	MAX (NOTE 6)	UNITS
ANALOG SWITCH CHARACTERISTICS						
Analog Signal Range, V_{ANALOG}		Full	0	-	V+	V
ON Resistance, R_{ON}	V+ = 3V, I_{COM} = 1.0mA, V_{NO} or V_{NC} = 1.5V, (See Figure 5)	25	-	83	175	Ω
		Full	-	-	275	Ω
DYNAMIC CHARACTERISTICS						
Turn-ON Time, t_{ON}	V+ = 3.3V, V_{NO} or V_{NC} = 1.5V, R_L = 300Ω, C_L = 35pF, V_{IN} = 0 to V+, (See Figure 1)	25	-	140	400	ns
		Full	-	-	500	ns
Turn-OFF Time, t_{OFF}	V+ = 3.3V, V_{NO} or V_{NC} = 1.5V, R_L = 300Ω, C_L = 35pF, V_{IN} = 0 to V+, (See Figure 1)	25	-	55	125	ns
		Full	-	-	175	ns
Break-Before-Make Time Delay (ISL8393), t_D	V+ = 3.6V, V_{NO} or V_{NC} = 1.5V, R_L = 300Ω, C_L = 35pF, V_{IN} = 0 to 3V, (See Figure 3)	25	20	-	-	ns
Charge Injection, Q	C_L = 1.0nF, V_G = 0V, R_G = 0Ω, (See Figure 2)	25	-	1	5	pC
POWER SUPPLY CHARACTERISTICS						
Positive Supply Current, I+	V+ = 3.6V, V_{IN} = 0V or V+, Switch On or Off	25	-1	0.01	1	µA
		Full	-1	-	1	µA
Negative Supply Current, I-		25	-1	0.01	1	µA
		Full	-1	-	1	µA

Test Circuits and Waveforms

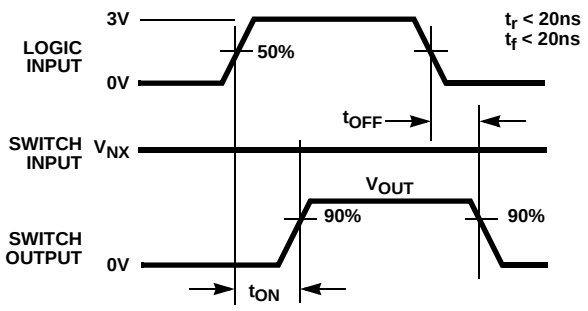

Logic input waveform is inverted for switches that have the opposite logic sense.

FIGURE 1A. MEASUREMENT POINTS

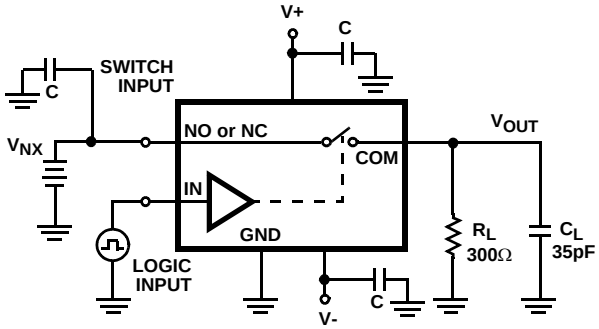

Repeat test for all switches. C_L includes fixture and stray capacitance.

$$V_{OUT} = V_{(NO\ or\ NC)} \frac{R_L}{R_L + R_{(ON)}}$$

FIGURE 1B. TEST CIRCUIT

FIGURE 1. SWITCHING TIMES

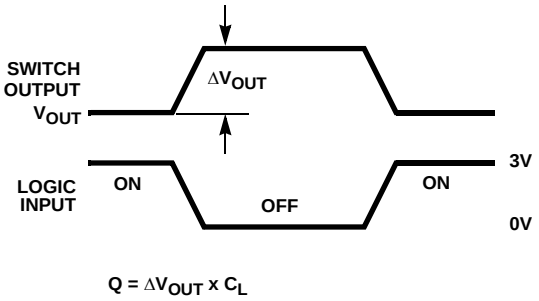

Logic input waveform is inverted for switches that have the opposite logic sense.

FIGURE 2A. MEASUREMENT POINTS

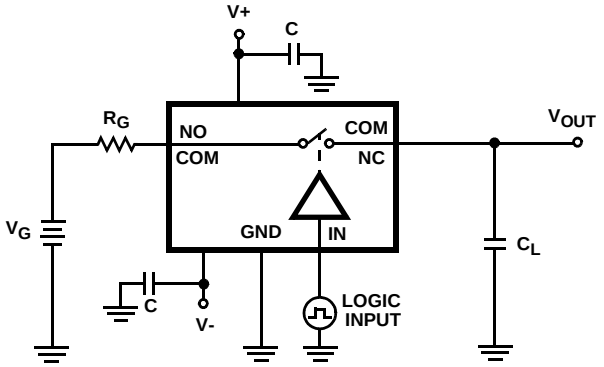

Repeat test for all switches. C_L includes fixture and stray capacitance.

NOTE: When testing the NC pin of a device use the NC as V_{OUT}. When testing the NO pin of a device use the COM as V_{OUT}.

FIGURE 2B. TEST CIRCUIT

FIGURE 2. CHARGE INJECTION

Test Circuits and Waveforms (Continued)

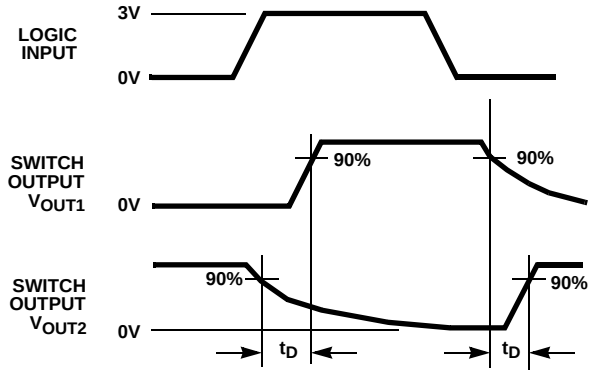

FIGURE 3A. MEASUREMENT POINTS

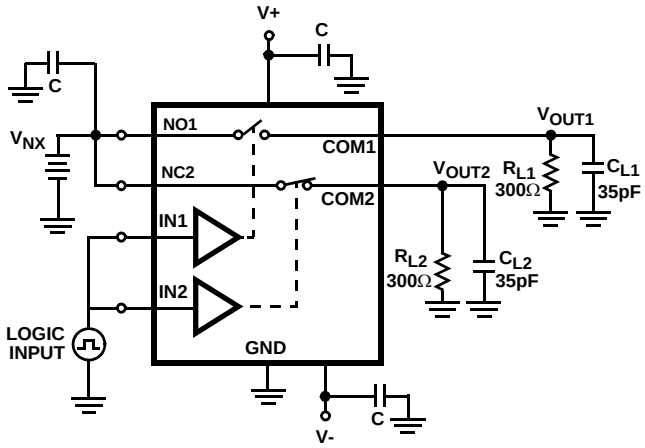

C_L includes fixture and stray capacitance.
Reconfigure accordingly to test SW3 and SW4.

FIGURE 3B. TEST CIRCUIT

FIGURE 3. BREAK-BEFORE-MAKE TIME (ISL8393 ONLY)

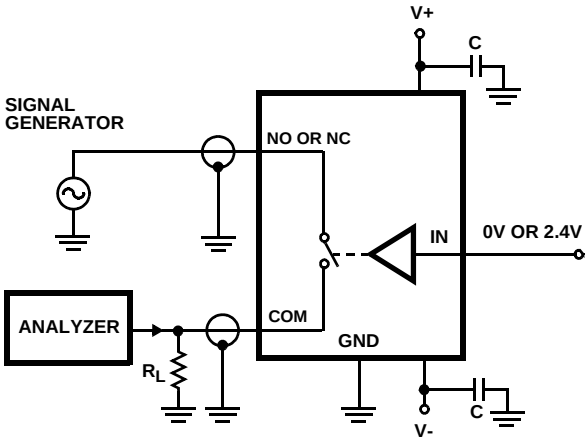

Repeat test for all switches.

FIGURE 4. OFF ISOLATION TEST CIRCUIT

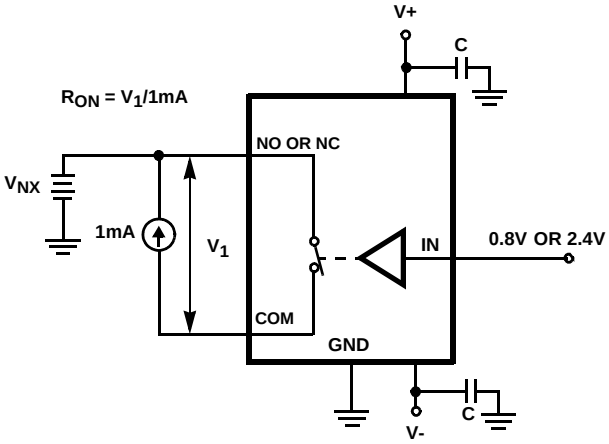

Repeat test for all switches.

FIGURE 5. R_{ON} TEST CIRCUIT

Test Circuits and Waveforms (Continued)

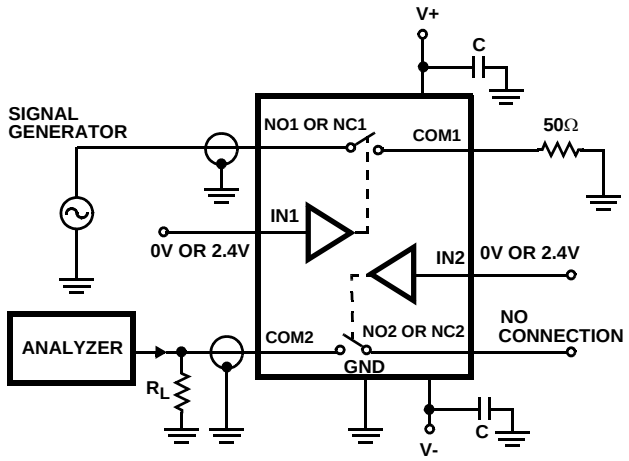

FIGURE 6. CROSSTALK TEST CIRCUIT

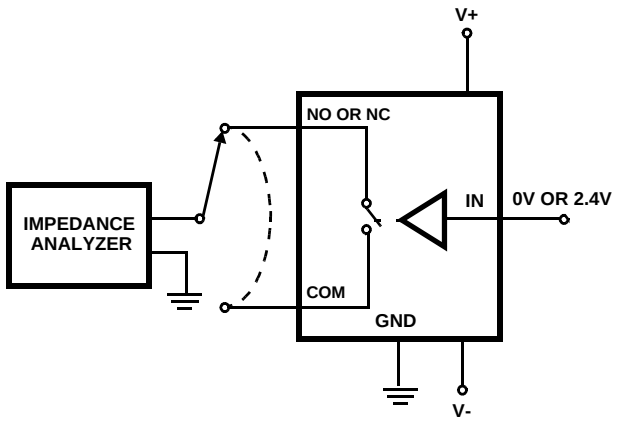

FIGURE 7. CAPACITANCE TEST CIRCUIT

Detailed Description

The ISL8391–ISL8393 quad analog switches offer precise switching capability from a bipolar ±2V to ±6V or a single 2V to 12V supply with low on-resistance (20Ω) and high speed switching (t_{ON} = 60ns, t_{OFF} = 30ns). The devices are especially well suited to portable battery powered equipment thanks to the low operating supply voltage (2V), low power consumption (1μW), low leakage currents (2.5nA max). High frequency applications also benefit from the wide bandwidth, and the very high OFF isolation and crosstalk rejection.

Supply Sequencing And Overvoltage Protection

As with any CMOS device, proper power supply sequencing is required to protect the device from excessive input currents which might permanently damage the IC. All I/O pins contain ESD protection diodes from the pin to V+ and to V- (see Figure 8). To prevent forward biasing these diodes, V+ and V- must be applied before any input signals, and input signal voltages must remain between V+ and V-. If these conditions cannot be guaranteed, then one of the following two protection methods should be employed.

Logic inputs can easily be protected by adding a 1kΩ resistor in series with the input (see Figure 8). The resistor limits the input current below the threshold that produces permanent damage, and the sub-microamp input current produces an insignificant voltage drop during normal operation.

Adding a series resistor to the switch input defeats the purpose of using a low R_{ON} switch, so two small signal diodes can be added in series with the supply pins to provide overvoltage protection for all pins (see Figure 8). These additional diodes limit the analog signal from 1V below V+ to 1V above V-. The low leakage current performance is unaffected by this approach, but the switch resistance may increase, especially at low supply voltages.

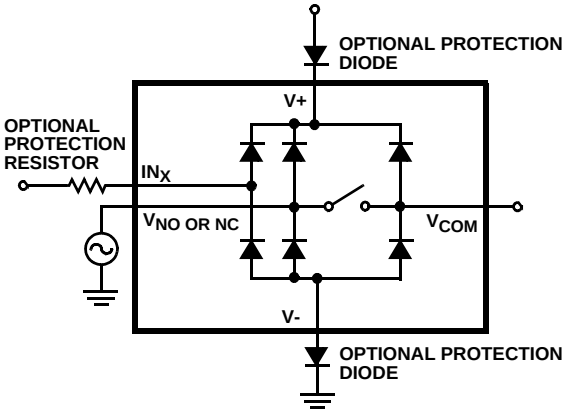

FIGURE 8. OVERVOLTAGE PROTECTION

Power-Supply Considerations

The ISL839X construction is typical of most CMOS analog switches, in that they have three supply pins: V+, V-, and GND. V+ and V- drive the internal CMOS switches and set their analog voltage limits, so there are no connections between the analog signal path and GND. Unlike switches with a 13V maximum supply voltage, the ISL839X 15V maximum supply voltage provides plenty of room for the 10% tolerance of 12V supplies (±6V or 12V single supply), as well as room for overshoot and noise spikes.

This family of switches performs equally well when operated with bipolar or single voltage supplies, and bipolar supplies need not be symmetrical. The minimum recommended supply voltage is 2V or ±2V. It is important to note that the input signal range, switching times, and ON-resistance degrade at lower supply voltages. Refer to the electrical

specification tables and *Typical Performance Curves* for details.

V+ and GND power the internal logic (thus setting the digital switching point) and level shifters. The level shifters convert the logic levels to switched V+ and V- signals to drive the analog switch gate terminals, so switch parameters - especially R_{ON} - are strong functions of both supplies.

Logic-Level Thresholds

V+ and GND power the internal logic stages, so V- has no affect on logic thresholds. This switch family is TTL compatible (0.8V and 2.4V) over a V+ supply range of 2.5V to 10V. At 12V the V_{IH} level is about 2.7V, so for best results use a logic family that provides a V_{OH} greater than 3V.

The digital input stages draw supply current whenever the digital input voltage is not at one of the supply rails. Driving the digital input signals from GND to V+ with a fast transition time minimizes power dissipation.

High-Frequency Performance

In 50Ω systems, signal response is reasonably flat even past 200MHz (see Figure 15), with a small signal -3dB bandwidth in excess of 300MHz, and a large signal bandwidth exceeding 300MHz.

An off switch acts like a capacitor and passes higher frequencies with less attenuation, resulting in signal feedthrough from a switch's input to its output. OFF Isolation is the resistance to this feedthrough, while Crosstalk indicates the amount of feedthrough from one switch to another. Figure 16 details the high OFF Isolation and Crosstalk rejection provided by this family. At 10MHz, OFF isolation is about 50dB in 50Ω systems, decreasing approximately 20dB per decade as frequency increases. Higher load impedances decrease OFF Isolation and Crosstalk rejection due to the voltage divider action of the switch OFF impedance and the load impedance.

Leakage Considerations

Reverse ESD protection diodes are internally connected between each analog-signal pin and both V+ and V-. One of these diodes conducts if any analog signal exceeds V+ or V-.

Virtually all the analog leakage current comes from the ESD diodes to V+ or V-. Although the ESD diodes on a given signal pin are identical and therefore fairly well balanced, they are reverse biased differently. Each is biased by either V+ or V- and the analog signal. This means their leakages will vary as the signal varies. The difference in the two diode leakages to the V+ and V- pins constitutes the analog-signal-path leakage current. All analog leakage current flows between each pin and one of the supply terminals, not to the other switch terminal. This is why both sides of a given switch can show leakage currents of the same or opposite polarity. There is no connection between the analog signal paths and GND.

Typical Performance Curves $T_A = 25^oC$, Unless Otherwise Specified

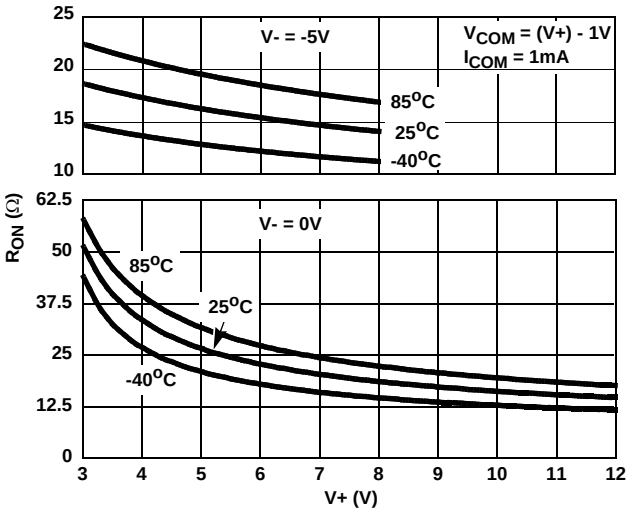

FIGURE 9. ON RESISTANCE vs SUPPLY VOLTAGE

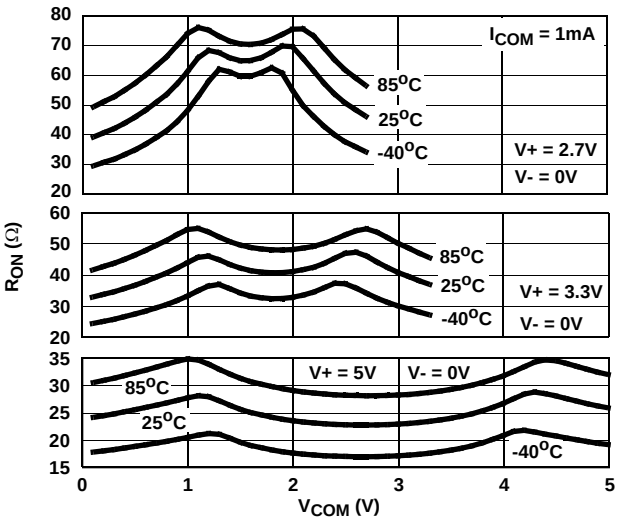

FIGURE 10. ON RESISTANCE vs SWITCH VOLTAGE

Typical Performance Curves $T_A = 25^oC$, Unless Otherwise Specified **(Continued)**

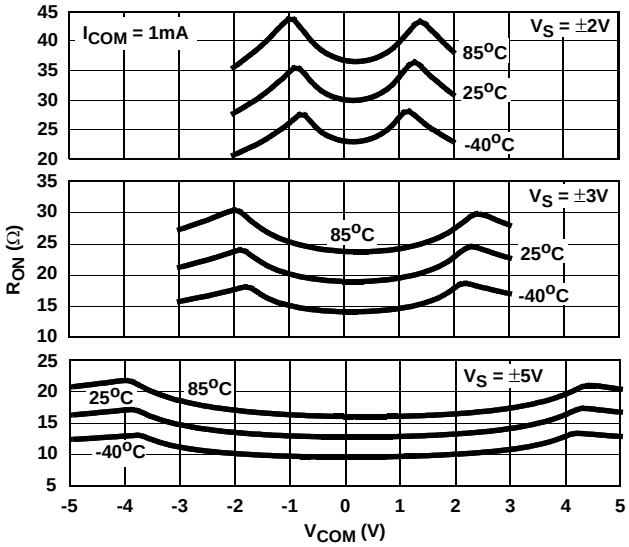

FIGURE 11. ON RESISTANCE vs SWITCH VOLTAGE

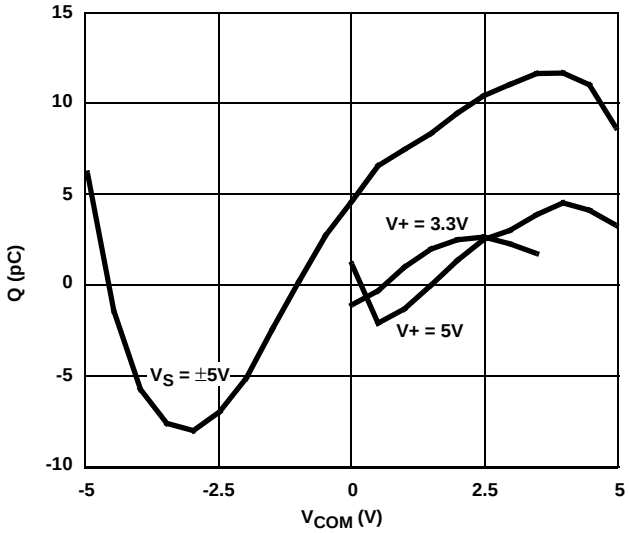

FIGURE 12. CHARGE INJECTION vs SWITCH VOLTAGE

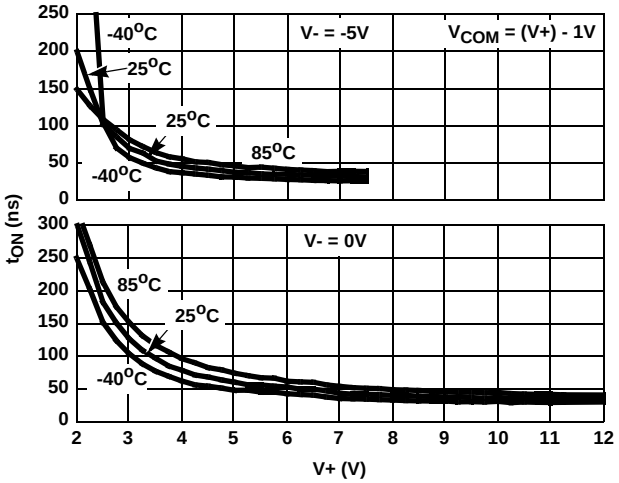

FIGURE 13. TURN - ON TIME vs SUPPLY VOLTAGE

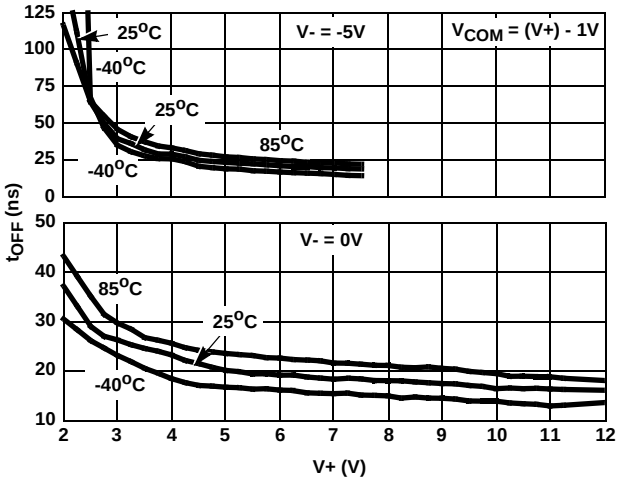

FIGURE 14. TURN - OFF TIME vs SUPPLY VOLTAGE

Typical Performance Curves $T_A = 25^oC$, Unless Otherwise Specified **(Continued)**

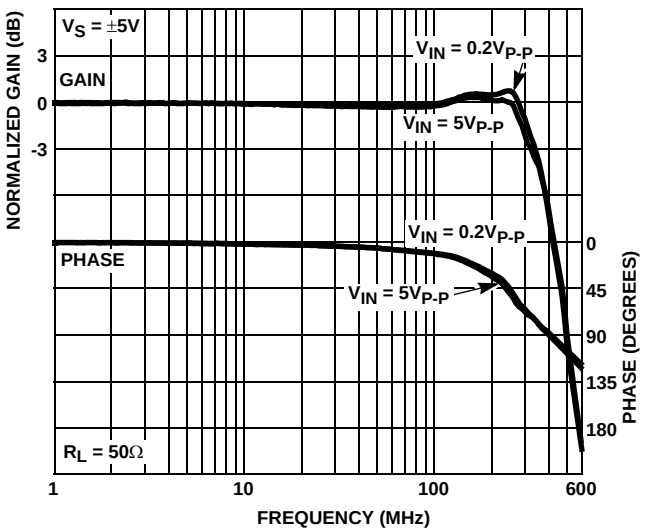

FIGURE 15. FREQUENCY RESPONSE

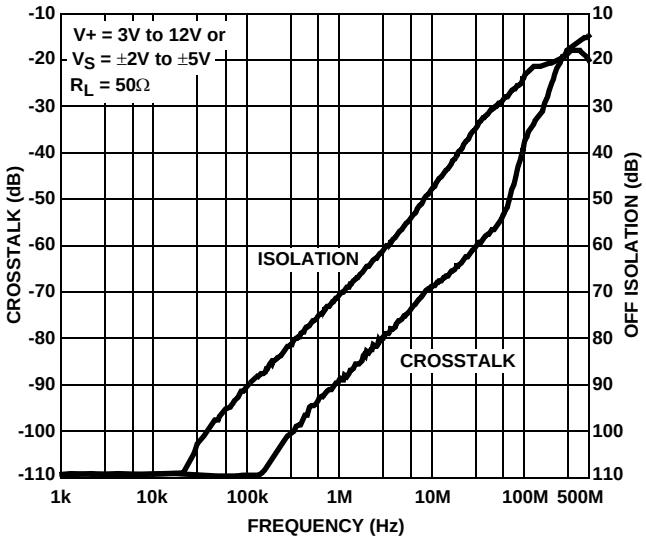

FIGURE 16. CROSSTALK AND OFF ISOLATION

Die Characteristics

SUBSTRATE POTENTIAL (POWERED UP):

V-

TRANSISTOR COUNT:

ISL8391: 209
ISL8392: 209
ISL8393: 209

PROCESS:

Si Gate CMOS

Small Outline Plastic Packages (SOIC)

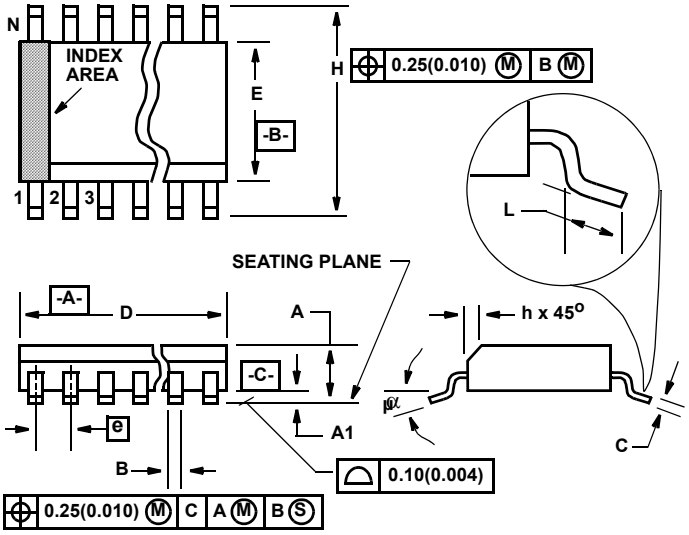

M16.15 (JEDEC MS-012-AC ISSUE C)
16 LEAD NARROW BODY SMALL OUTLINE PLASTIC PACKAGE

SYMBOL	INCHES		MILLIMETERS		NOTES
	MIN	MAX	MIN	MAX	
A	0.053	0.069	1.35	1.75	-
A1	0.004	0.010	0.10	0.25	-
B	0.014	0.019	0.35	0.49	9
C	0.007	0.010	0.19	0.25	-
D	0.386	0.394	9.80	10.00	3
E	0.150	0.157	3.80	4.00	4
e	0.050 BSC		1.27 BSC		-
H	0.228	0.244	5.80	6.20	-
h	0.010	0.020	0.25	0.50	5
L	0.016	0.050	0.40	1.27	6
N	16		16		7
α	0°	8°	0°	8°	-

Rev. 1 02/02

NOTES:

1. Symbols are defined in the “MO Series Symbol List” in Section 2.2 of Publication Number 95.
2. Dimensioning and tolerancing per ANSI Y14.5M-1982.
3. Dimension “D” does not include mold flash, protrusions or gate burrs. Mold flash, protrusion and gate burrs shall not exceed 0.15mm (0.006 inch) per side.
4. Dimension “E” does not include interlead flash or protrusions. Interlead flash and protrusions shall not exceed 0.25mm (0.010 inch) per side.
5. The chamfer on the body is optional. If it is not present, a visual index feature must be located within the crosshatched area.
6. “L” is the length of terminal for soldering to a substrate.
7. “N” is the number of terminal positions.
8. Terminal numbers are shown for reference only.
9. The lead width “B”, as measured 0.36mm (0.014 inch) or greater above the seating plane, shall not exceed a maximum value of 0.61mm (0.024 inch)
10. Controlling dimension: MILLIMETER. Converted inch dimensions are not necessarily exact.

All Intersil U.S. products are manufactured, assembled and tested utilizing ISO9000 quality systems.
Intersil Corporation’s quality certifications can be viewed at www.intersil.com/design/quality

Intersil products are sold by description only. Intersil Corporation reserves the right to make changes in circuit design, software and/or specifications at any time without notice. Accordingly, the reader is cautioned to verify that data sheets are current before placing orders. Information furnished by Intersil is believed to be accurate and reliable. However, no responsibility is assumed by Intersil or its subsidiaries for its use; nor for any infringements of patents or other rights of third parties which may result from its use. No license is granted by implication or otherwise under any patent or patent rights of Intersil or its subsidiaries.

For information regarding Intersil Corporation and its products, see www.intersil.com