查询AM29841供应商 捷多邦，专业PCB打样工厂，24小时加急出货

Am29841/Am29843

High Performance Bus Interface Latches

Advanced Micro Devices

DISTINCTIVE CHARACTERISTICS

- **High speed parallel latches**
  - Noninverting transparent t_{PD} = 5.25 ns typ
  - Inverting transparent t_{PD} = 6.0 ns typ
- **Buffered common latch enable, clear and preset input**
- **Three-state outputs glitch free during power-up and down**
- **Outputs have Schottky clamp to ground**
- **48 mA Commercial I_{OL}**
- **Low input/output capacitance**
  - 6 pF inputs (typical)
  - 8 pF outputs (typical)
- **I_{OH} specified 2.0 V and 2.4 V**
- **24-pin 0.3" space saving package**
- **Fully TTL compatible inputs and outputs**
- **IMOX™ high performance IMplanted OXide isolated process**

GENERAL DESCRIPTION

The Am29841/843 bus interface latches are designed to eliminate the extra packages required to buffer existing latches and provide extra data width for wider address/data paths or buses carrying parity. The Am29841 is a buffered, 10-bit wide version of the popular '373 function. The Am29843 is a 9-bit wide buffered latch with Preset ($\overline{PRE}$) and Clear ($\overline{CLR}$) – ideal for parity bus interfacing in high performance systems.

All of the Am29800 high performance interface family is designed for high capacitance load drive capability while providing low capacitance bus loading at both inputs and outputs. All inputs are Schottky diode inputs, and all outputs are designed for low capacitance bus loading in the high impedance state.

BLOCK DIAGRAMS

Am29841

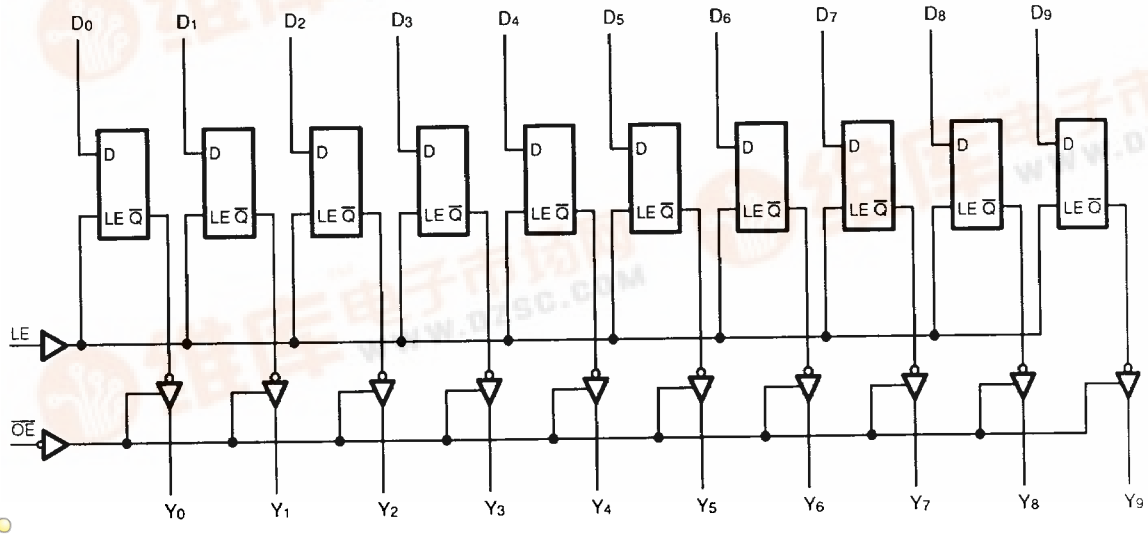

01972-001A

找PDF 维库一下 pdf.dzsc.com

IMOX is a trademark of Advanced Micro Devices, Inc.

BLOCK DIAGRAMS (Continued)
Am29843

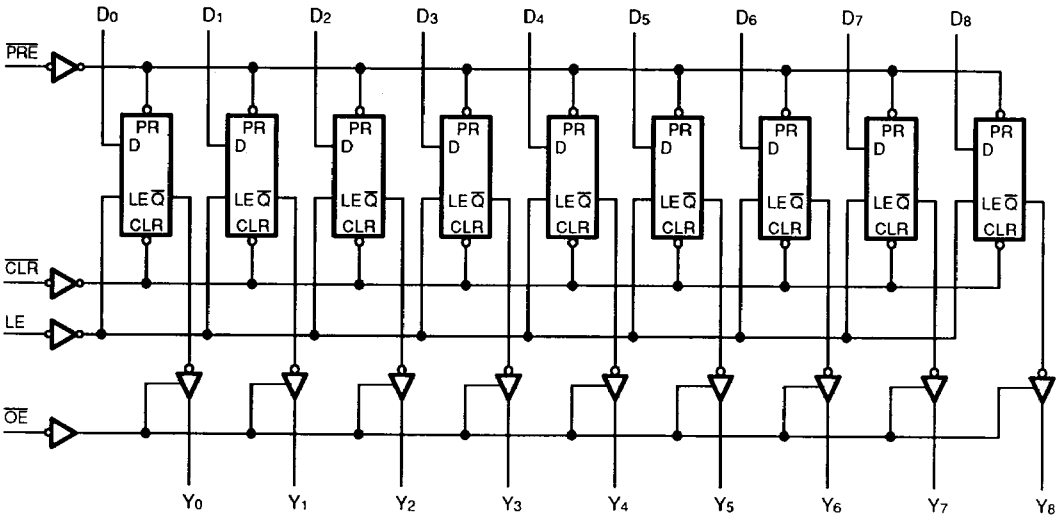

01972-002A

CONNECTION DIAGRAMS
Top View

Am29841

DIP

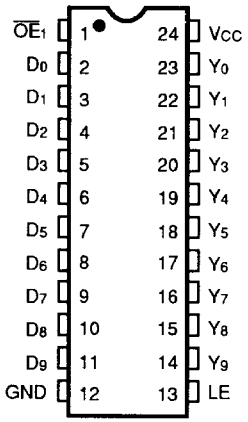

01972-003A

Am29843

DIP

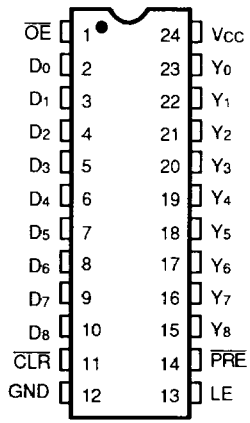

01972-004A

LOGIC SYMBOLS

Am29841
10-Bit Latch

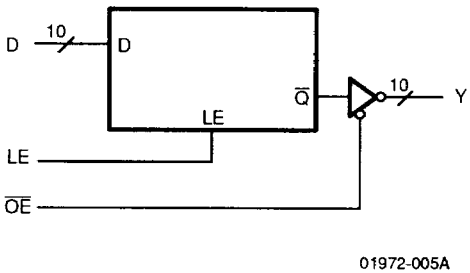

01972-005A

Am29843
9-Bit Latch

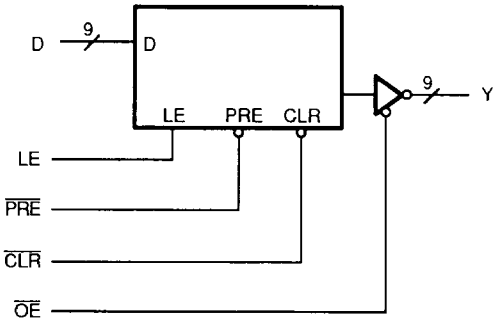

01972-006A

ORDERING INFORMATION
Standard Products

AMD standard products are available in several packages and operating ranges. The order number (Valid Combination) is formed by a combination of:

a. Device Number
b. Speed Option (if applicable)
c. Package Type
d. Temperature Range
e. Optional Processing

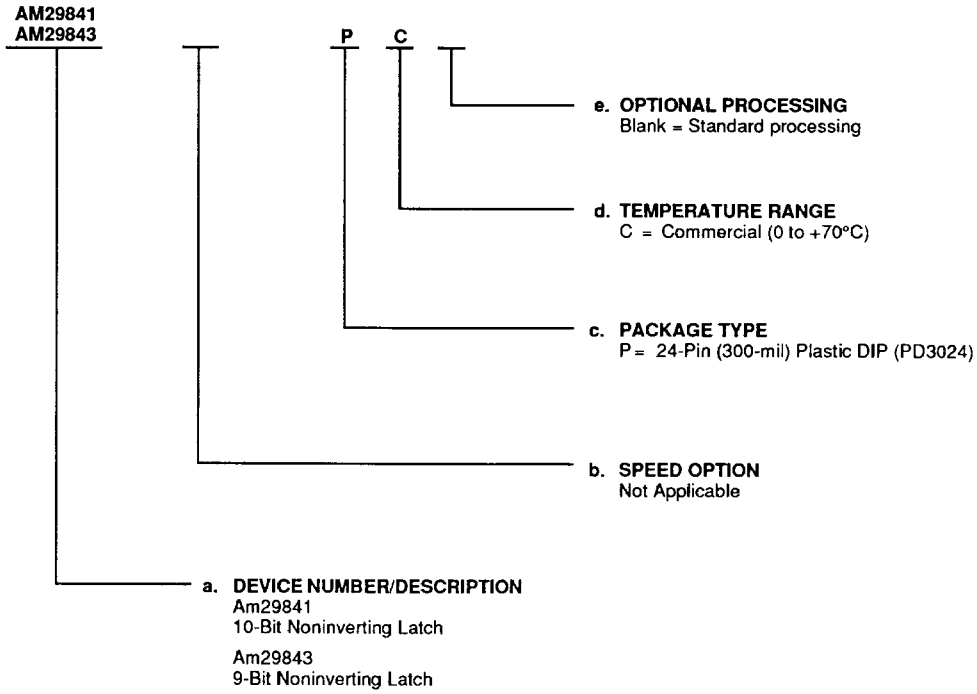

Valid Combinations	
AM29841	PC
AM29843	

Valid Combinations

Valid Combinations list configurations planned to be supported in volume for this device. Consult the local AMD sales office to confirm availability of specific valid combinations or to check on newly released combinations, and to obtain additional data on AMD's standard military grade products.

PIN DESCRIPTION

$\overline{CLR}$

When $\overline{CLR}$ is LOW, the outputs are LOW if $\overline{OE}$ is LOW. When $\overline{CLR}$ is HIGH, data can be entered into the latch.

D_i

The latch data inputs.

LE

The latch enable input. The latches are transparent when LE is HIGH. Input data is latched on the HIGH-to-LOW transition.

Y_i

The 3-state latch outputs.

$\overline{OE}$

The output enable control. When $\overline{OE}$ is LOW, the outputs are enabled. When $\overline{OE}$ is HIGH, the outputs Y_i are in the high-impedance (off) state.

$\overline{PRE}$

Preset line. When $\overline{PRE}$ is LOW, the outputs are HIGH if $\overline{OE}$ is LOW. Preset overrides $\overline{CLR}$.

FUNCTION TABLES

Am29841

Inputs			Internal	Outputs	
$\overline{OE}$	LE	D_i	$\overline{Q}_i$	Y_i	Function
H	X	X	X	Z	Hi–Z
H	H	L	H	Z	Hi–Z
H	H	H	L	Z	Hi–Z
H	L	X	NC	Z	Latched (Hi-Z)
L	H	L	H	L	Transparent
L	H	H	L	H	Transparent
L	L	X	NC	NC	Latched

Am29843

Inputs					Internal	Outputs	
$\overline{CLR}$	$\overline{PRE}$	$\overline{OE}$	LE	D_i	$\overline{Q}_i$	Y_i	Function
H	H	H	X	X	X	Z	Hi-Z
H	H	H	H	L	H	Z	Hi-Z
H	H	H	H	H	L	Z	Hi-Z
H	H	H	L	X	NC	Z	Latched (Hi-Z)
H	H	L	H	L	H	L	Transparent
H	H	L	H	H	L	H	Transparent
H	H	L	L	X	NC	NC	Latched
H	L	L	X	X	L	H	Preset
L	H	L	X	X	H	L	Clear
L	L	L	X	X	L	H	Preset
L	H	H	L	X	L	Z	Latched (Hi-Z)
H	L	H	L	X	L	Z	Latched (Hi-Z)

H = HIGH
L = LOW
X = Don't Care
NC = No Change
Z = High Impedance

ABSOLUTE MAXIMUM RATINGS

Storage Temperature	−65°C to +150°C
Ambient Temperature with Power Applied	−55°C to +125°C
Supply Voltage to Ground Potential Continuous	−0.5 V to +7.0 V
DC Voltage Applied to Outputs for High Output State	−0.5 V to +5.5 V
DC Input Voltage	−0.5 V to +5.5 V
DC Output Current, Into Outputs	100 mA
DC Input Current	−30 mA to +5.0 mA

Stresses above those listed under Absolute Maximum Ratings may cause permanent device failure. Functionality at or above these limits is not implied. Exposure to absolute maximum ratings for extended periods may affect device reliability.

OPERATING RANGES

Commercial (C) Devices

Ambient Temperature (T_A)	0°C to +70°C
Supply Voltage (V_{CC})	5.0 V ± 10% 4.5 V to 5.5 V

Operating ranges define those limits between which the functionality of the device is guaranteed.

DC CHARACTERISTICS over operating ranges unless otherwise specified

Parameter Symbol	Parameter Description	Test Conditions		Min.	Max.	Unit
V_{OH}	Output HIGH Voltage	V_{CC} = 4.5 V V_{IN} = V_{IH} or V_{IL}	I_{OH} = −15 mA	2.4		V
			I_{OH} = −24 mA	2.0		
V_{OL}	Output LOW Voltage	V_{CC} = 4.5 V V_{IN} = V_{IH} or V_{IL}	I_{OL} = 48 mA		0.5	V
V_{IH}	Input HIGH Level	Guaranteed input logical HIGH voltage for all inputs		2.0		V
V_{IL}	Input LOW Level	Guaranteed input logical LOW voltage for all inputs			0.8	V
V_I	Input Clamp Voltage	V_{CC} = 4.5 V, I_{IN} = −18 mA			−1.2	V
I_{IL}	Input LOW Current	V_{CC} = 5.5 V, V_{IN} = 0.4 V			−1.0	mA
I_{IH}	Input HIGH Current	V_{CC} = 5.5 V, V_{IN} = 2.7 V			50	μA
I_I	Input HIGH Current	V_{CC} = 5.5 V, V_{IN} = 5.5 V			1.0	mA
I_{OZ}	Output Off-State (Hi-Z) Output Current	V_{CC} = 5.5 V	V_O = 0.4 V		−50	μA
			V_O = 2.4 V		50	
I_{SC}	Output Short Circuit Current (Note 1)	V_{CC} = 5.5 V		−75	−250	mA
I_{CC}	Supply Current	V_{CC} = 5.5 V Outputs Open	Over Temperature Range		120	mA
			+70°C		110	

Note:

1. Not more than one output should be shorted at a time, and duration of the short-circuit should not exceed one second.

SWITCHING CHARACTERISTICS (T_A = +25°C, V_{CC} = 5.0 V)

Parameter Symbol	Parameter Description		Test Conditions (Note 1)	Min.	Typ.	Max.	Unit
t_{PLH}	Data (D_i) to Output Y_i (LE = HIGH)		C_L = 50 pF	3.5	5.7	8	ns
t_{PHL}				3.5	6.2	8	ns
t_{PLH}			C_L = 300 pF		10	13	ns
t_{PHL}					10	13	ns
t_S	Data to LE Setup Time		C_L = 50 pF	2.0	–0.2		ns
t_H	Data to LE Hold Time			2.5	0.7		ns
t_{PLH}	Latch Enable (LE) to Y_i		C_L = 50 pF		8	10.5	ns
t_{PHL}					7.5	10	ns
t_{PLH}			C_L = 300 pF			15	ns
t_{PHL}						15	ns
t_{PLH}	Propagation Delay, Preset to Y_i		C_L = 50 pF		6.5	9	ns
t_S	Preset Recovery ($\overline{PRE}$ ↓) Time				7.3	12	ns
t_{PHL}	Propagation Delay, Clear to Y_i				15	18	ns
t_S	Clear Recovery ($\overline{CLR}$ ↓) Time				7.8	12	ns
t_{PWH}	LE Pulse Width	HIGH	C_L = 50 pF	4	2.5		ns
t_{PWL}	Preset Pulse Width	LOW		5			ns
t_{PWL}	Clear Pulse Width	LOW		6			ns
t_{ZH}	Output Enable Time $\overline{OE}$ ↑ to Y_i		C_L = 300 pF			17	ns
t_{ZL}						21	ns
t_{ZH}			C_L = 50 pF		7.3	12	ns
t_{ZL}					9.7	12	ns
t_{HZ}	Output Disable Time $\overline{OE}$ ↓ to Y_i		C_L = 50 pF		10.4	14	ns
t_{LZ}					4.7	11	ns
t_{HZ}			C_L = 5 pF (Note 2)		3.4	8	ns
t_{LZ}					3.8	8	ns

Notes:

1. See test circuit and waveforms (Chapter 2).
2. Not tested.

SWITCHING CHARACTERISTICS over operating ranges unless otherwise specified

Parameter Symbol	Parameter Description		Test Conditions (Note 1)	Min.	Max.	Unit
t_{PLH}	Data (D_i) to Output Y_i (LE = HIGH)		C_L = 50 pF	3.5	9.5	ns
t_{PHL}				3.5	9.5	ns
t_{PLH}			C_L = 300 pF		12.5	ns
t_{PHL}					13	ns
t_S	Data to LE Setup Time		C_L = 50 pF	2.5		ns
t_H	Data to LE Hold Time			2.5		ns
t_{PLH}	Latch Enable (LE) to Y_i		C_L = 50 pF		12	ns
t_{PHL}					12	ns
t_{PLH}			C_L = 300 pF		16	ns
t_{PHL}					16	ns
t_{PLH}	Propagation Delay, Preset to Y_i		C_L = 50 pF		12	ns
t_S	Preset Recovery ($\overline{PRE}$ ↑) Time				14	ns
t_{PHL}	Propagation Delay, Clear to Y_i				21	ns
t_S	Clear Recovery ($\overline{CLR}$ ↑) Time				14	ns
t_{PWH}	LE Pulse Width	HIGH	C_L = 50 pF	6		ns
t_{PWL}	Preset Pulse Width	LOW		8		ns
t_{PWL}	Clear Pulse Width	LOW		8		ns
t_{ZH}	Output Enable Time $\overline{OE}$ ↓ to Y_i		C_L = 300 pF		20	ns
t_{ZL}					23	ns
t_{ZH}			C_L = 50 pF		14	ns
t_{ZL}					14	ns
t_{HZ}	Output Disable Time $\overline{OE}$ ↑ to Y_i		C_L = 50 pF		15	ns
t_{LZ}					12	ns
t_{HZ}			C_L = 5 pF		9	ns
t_{LZ}					9	ns

Note:

1. See test circuit and waveforms (Chapter 2).

INPUT/OUTPUT CURRENT INTERFACE CONDITIONS

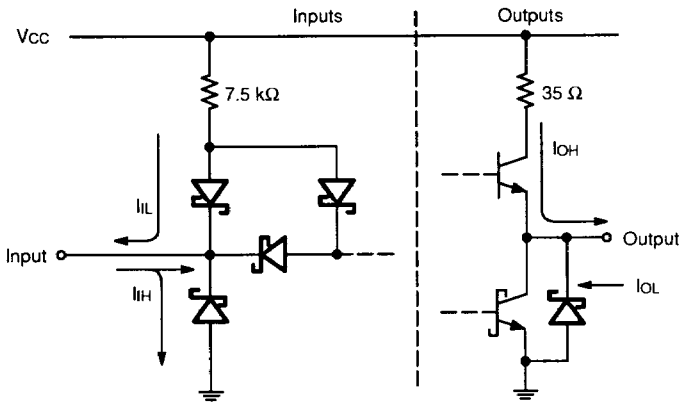

01972-007A

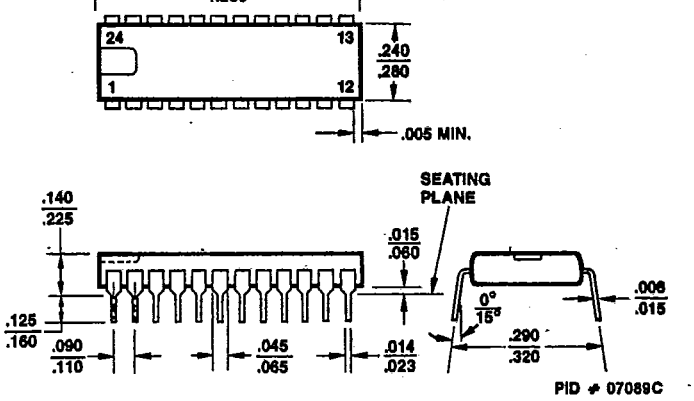

CD3024

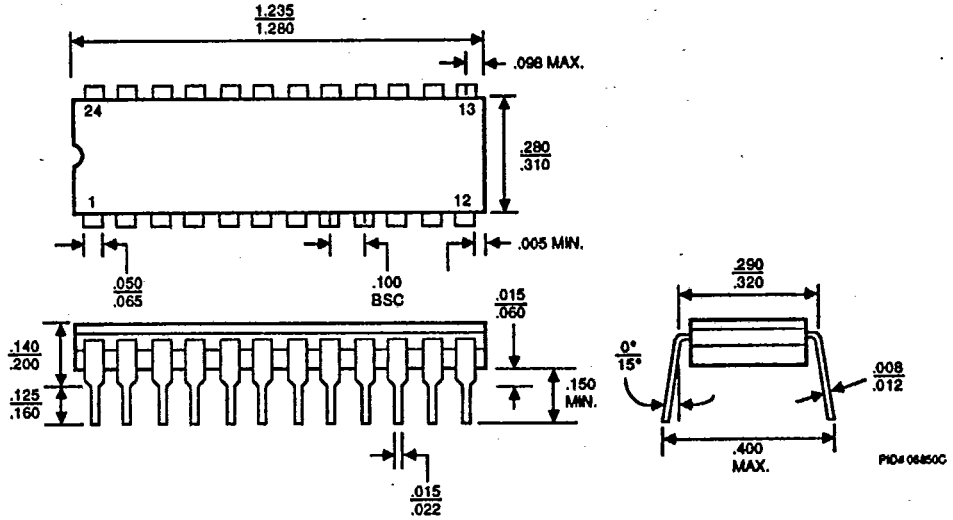

*For reference only.

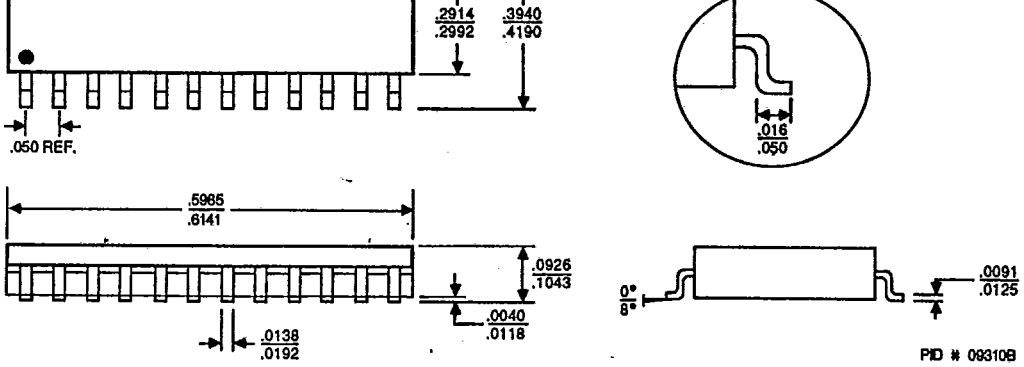
.2914
.2992
.3940
.4190
.050 REF.
.016
.050
.5965
.6141
.0926
.1043
.0040
.0118
.0138
.0192
0°
8°
.0091
.0125
PID # 093108

CFM024

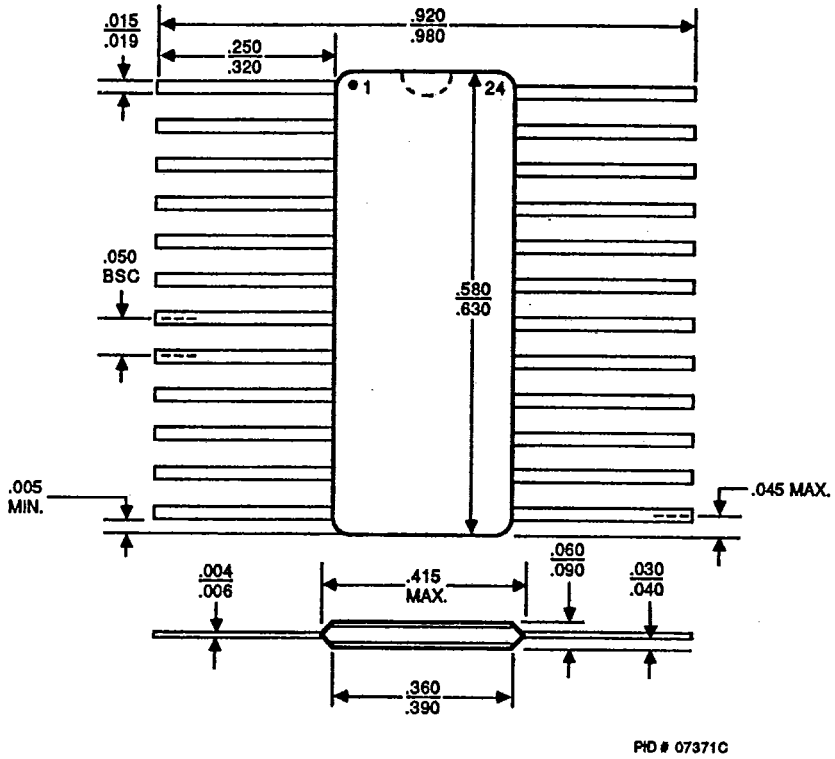
.015
.019
.920
.980
.250
.320
1
24
.050
BSC
.580
.630
.005
MIN.
.045 MAX.
.004
.006
.415
MAX.
.060
.090
.030
.040
.360
.390
PID # 07371C

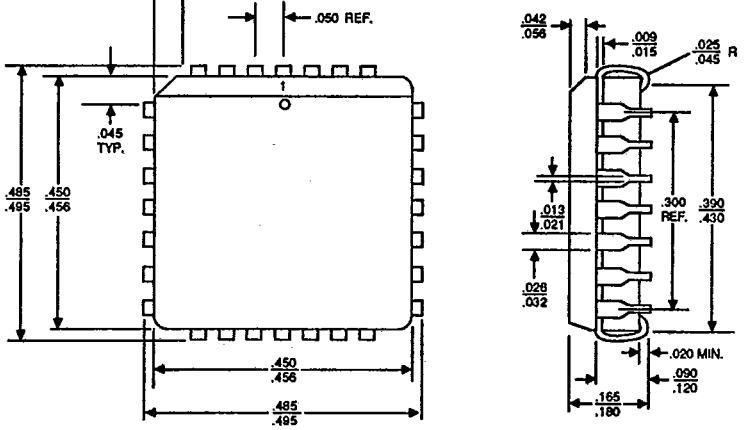

PID # 06751E

CL 028

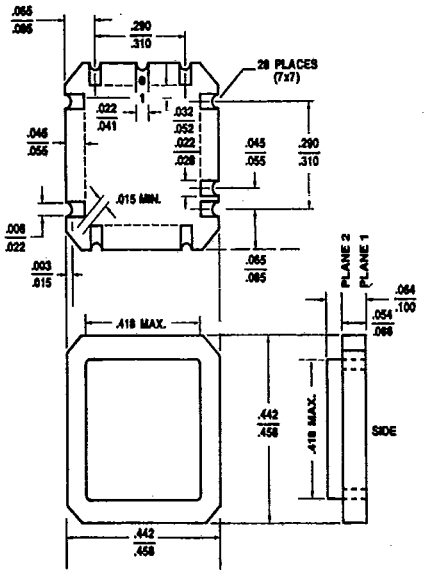

PID # 06595D

Advanced Micro Devices reserves the right to make changes in its product without notice in order to improve design or performance characteristics. The performance characteristics listed in this document are guaranteed by specific tests, correlated testing, guard banding, design and other practices common to the industry. For specific testing details, contact your local AMD sales representative. The company assumes no responsibility for the use of any circuits described herein.

ADVANCED MICRO DEVICES 901 Thompson Pl., P.O. Box 3453, Sunnyvale, CA 94088, USA
TEL: (408) 732-2400 • TWX: 910-339-9280 • TELEX: 34-6306 • TOLL FREE: (800) 538-8450

© 1988 Advanced Micro Devices, Inc.
Printed in U.S.A. AIS-WCP-20M-01/88-0

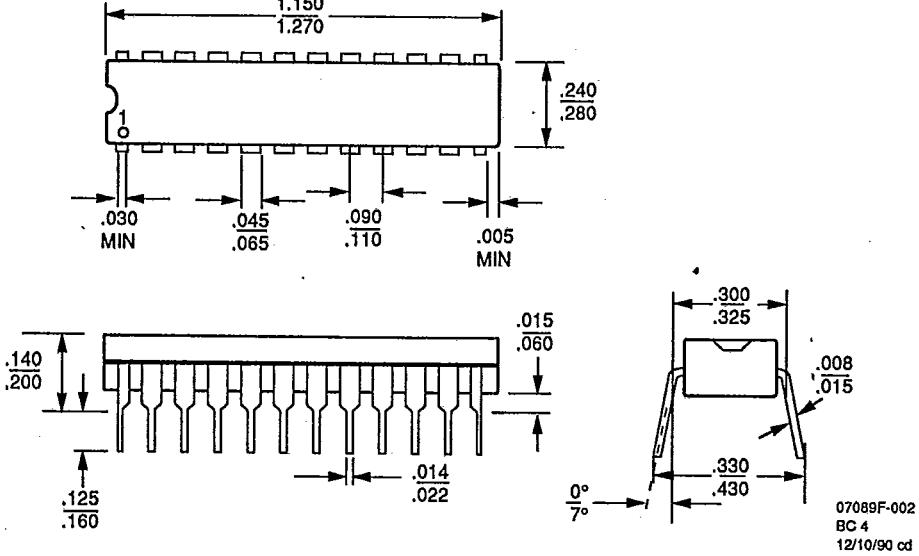

Note:
For reference only. All dimensions measured in inches. BSC is an ANSI standard for Basic Space Centering.

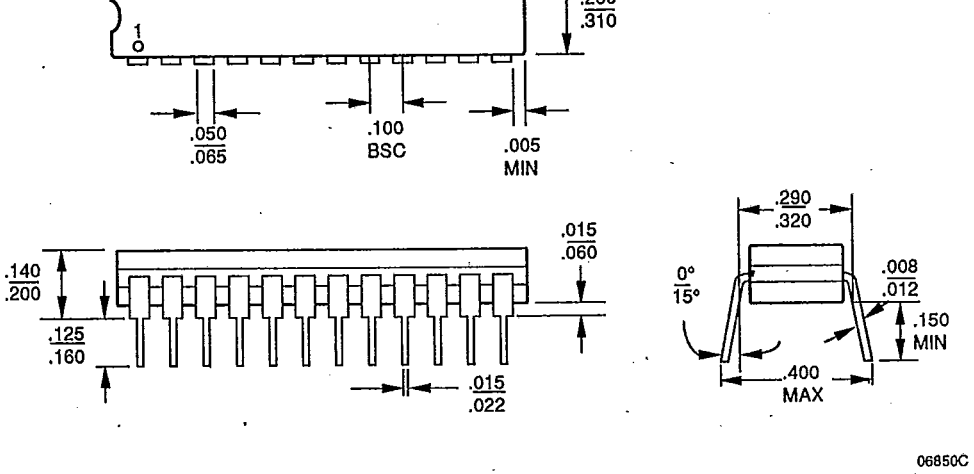

PL 028
28-Pin Plastic Leaded Chip Carrier

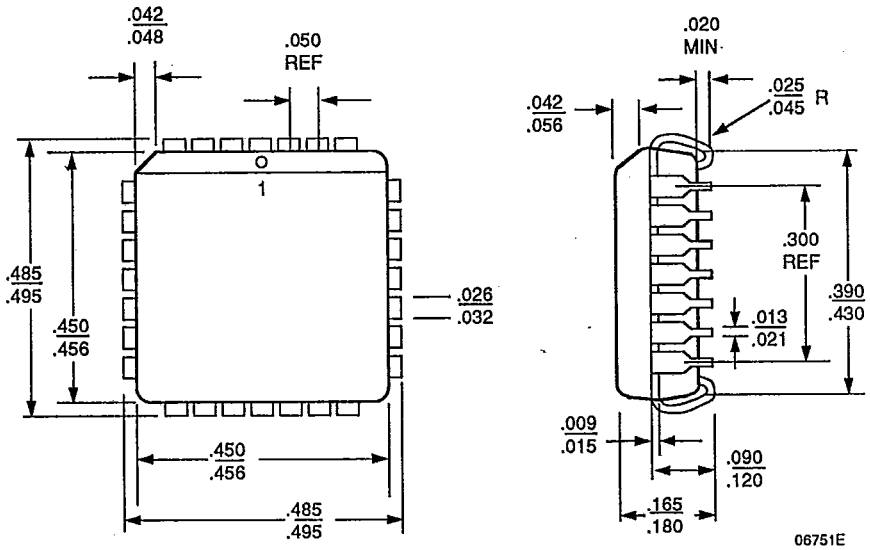

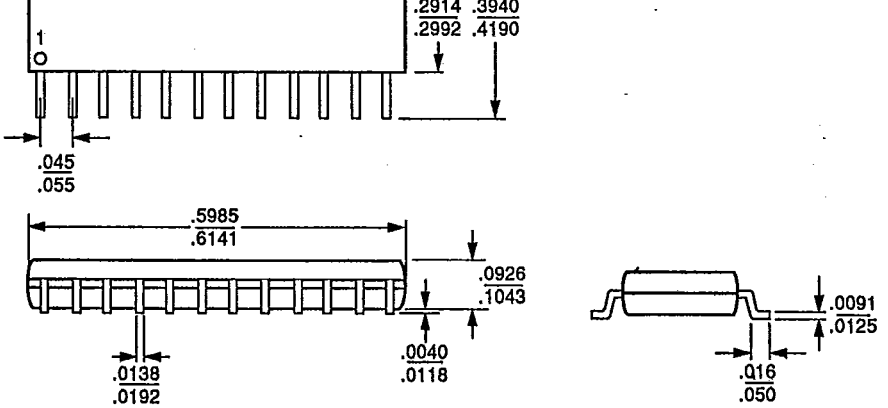
1
.2914
.2992
.3940
.4190
.045
.055
.5985
.6141
.0926
.1043
.0040
.0118
.0138
.0192
.0091
.0125
.016
.050

09310B