2.5V Adjustable Precision Shunt Regulator

General Description

The TL431 is an adjustable shunt regulator designed to act as an open-loop error amplifier with a 2.5V temperature compensated reference. Its highly accurate bandgap reference is perfect for applications requiring stability and accuracy over temperature and life.

Sharp turn-on characteristics and a low temperature coefficient make the TL431 excellent replacement for many zener diode applications programmable to any value greater than 2.5V and up to 36V by using two external resistors.

The TL431 device is offered in three grades, with initial tolerances (at 25°C) of 0.5% for TL431B, 1% for TL431A, and 2% for TL431 . In addition, low output drift vs temperature ensures good stability over the entire temperature range.

Applications

- Battery Operating Equipment
- Adjustable Supplies
- Switching Power Supplies
- Error Amplifiers
- Single Supply Amplifier
- Monitors / VCRsz / TV
- Personal Computers

Functional Block Diagram

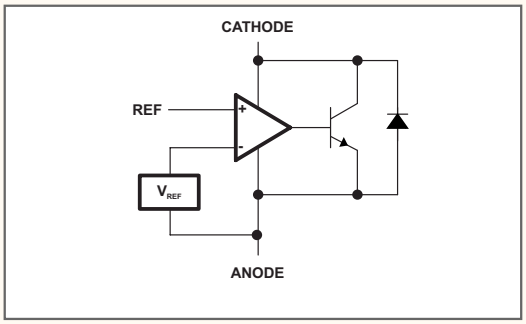

Pin Configuration

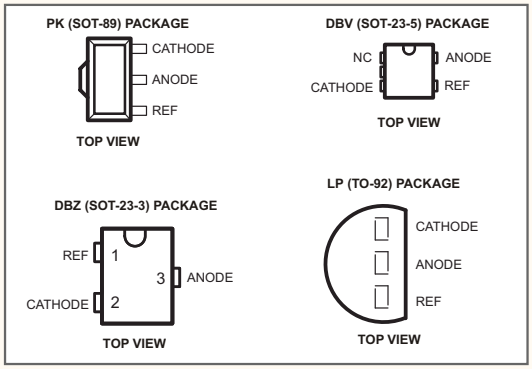

Features

- Trimmed Bandgap to ..... 0.5%,1% & 2%
- Wide Operating Current ..... 1mA to 150mA
- Low Temperature Coefficient..... 50ppm/°C
- Extended Temperature Range ..... 0°C to 105°C
- Adjustable Output Voltage ..... V_{REF} to 36V
- Offered in TO-92, TO-89, SOT-23-3, SOT-23-5

Ordering Information

T_A	Precision	Package	Ordering Part Number	Top Side Marking
0°C to 70°C	2%	SOT-23-5	TL431CDBV	T3C
	2%	SOT-23-5	TL431CDBV/TR	T3C
	2%	SOT-23-3	TL431CDBZ	T3C
	2%	SOT-23-3	TL431CDBZ/TR	T3C
	2%	SOT-89	TL431CPK	43
	2%	SOT-89	TL431CPK/TR	43
	2%	TO-92	TL431CLP	TL431C
	2%	T0-92	TL431CLP/TR	TL431C
	1%	SOT-23-5	TL431ACDBV	TAC
	1%	SOT-23-5	TL431ACDBV/TR	TAC
	1%	SOT-23-3	TL431ACDBZ	TAC
	1%	SOT-23-3	TL431ACDBZ/TR	TAC
	1%	SOT-89	TL431ACPK	4A
	1%	SOT-89	TL431ACPK/TR	4A
	1%	TO-92	TL431ACLP	TL431AC
	1%	T0-92	TL431ACLP/TR	TL431AC
	0.5%	SOT-23-5	TL431BCDBV	TBC
	0.5%	SOT-23-5	TL431BCDBV/TR	TBC
	0.5%	SOT-23-3	TL431BCDBZ	TBC
	0.5%	SOT-23-3	TL431BCDBZ/TR	TBC
	0.5%	SOT-89	TL431BCPK	4C
	0.5%	SOT-89	TL431BCPK/TR	4C
	0.5%	TO-92	TL431BCLP	TL431B
	0.5%	T0-92	TL431BCLP/TR	TL431B
0°C to 105°C	2%	SOT-23-5	TL431RDBV	T3R
	2%	SOT-23-5	TL431RDBV/TR	T3R
	2%	SOT-23-3	TL431RDBZ	T3R
	2%	SOT-23-3	TL431RDBZ/TR	T3R
	2%	SOT-89	TL431RPK	53
	2%	SOT-89	TL431RPK/TR	53
	2%	TO-92	TL431RLP	TL431R
	2%	T0-92	TL431RLP/TR	TL431R
	1%	SOT-23-5	TL431ARDBV	TAR
	1%	SOT-23-5	TL431ARDBV/TR	TAR
	1%	SOT-23-3	TL431ARDBZ	TAR
	1%	SOT-23-3	TL431ARDBZ/TR	TAR
	1%	SOT-89	TL431ARPK	5A
	1%	SOT-89	TL431ARPK/TR	5A
	1%	TO-92	TL431ARLP	TL431AR
	1%	T0-92	TL431ARLP/TR	TL431AR
	0.5%	SOT-23-5	TL431BRDBV	TBR
	0.5%	SOT-23-5	TL431BRDBV/TR	TBR
	0.5%	SOT-23-3	TL431BRDBZ	TBR
	0.5%	SOT-23-3	TL431BRDBZ/TR	TBR
	0.5%	SOT-89	TL431BRPK	5C
	0.5%	SOT-89	TL431BRPK/TR	5C
	0.5%	TO-92	TL431BRLP	TL431BR
	0.5%	T0-92	TL431BRLP/TR	TL431BR

Absolute Maximum Ratings (Note 1)

Storage Temperature Range ..... -65°C to 150°C
Operating Temperature Range ..... 0°C to 105°C
Lead Temperature
TO-92 Package / SOT-23 Package
(Soldering 10 sec) ..... 300°C
Internal Power Dissipation (Notes 2,3)
TO-92 Package 0.78W
SOT-23 Package 0.28W

Cathode Voltage 37V
Reference Input Current ..... 10 mA

Operating Conditions	Min	Max
Cathode Voltage	V_{REF}	36 V
Cathode Current	1.0 mA	100 mA

Note 2: $t_j = +150°C$
Note 3: Ratings apply to ambient temperature at 25°C. Above this temperature, derate the TO-92 at 6.2 mW/°C and the SOT-23-3 at 2.2 mW/°C

Electrical Characterstics

at 25°C I_E @ 10 mA $V_E = V_{REF}$, unless otherwise specified)

Parameters	Symbol	Conditions	Min	Typ.	Max	Units
TLV431 (2%)						
Reference Voltage	V_{REF}	$T_J = 0°C$ to $105°C$	2.445	2.495	2.545	V V
ΔV_{REF} with Temp	TC			0.07	0.20	mV°C
Ratio of Change in V_{REF} to Cathode Voltage	$\frac{\Delta V_{REF}}{\Delta V_K}$	V_{REF} to 10V 10V to 36V	-2.7 -2.0	-1.0 -0.4	0.3	mV/V
Reference Input Current	I_{REF}			0.7	4.0	µA
I_{REF} Temp. Deviation	ΔI_{REF}	$T_J = 0°C$ to $105°C$		0.4	1.2	µA
Minimum I_K for Regulation	$I_{K(MIN)}$			0.4	1.0	mA
Off State Leakage	$I_{K(OFF)}$	$V_{REF} = 0V$, $V_{KA} = 36V$		0.04	1000	nA
Dynamic Output Impedance	Z_{KA}	$f_Z = 1kHz$ $I_K = 1$ to 150 mA		0.15	0.5	Ω
TLV431A (1%)						
Reference Voltage	V_{REF}	$T_J = 0°C$ to $105°C$	2.445	2.495	2.545	V V
ΔV_{REF} with Temp	TC			0.07	0.20	mV°C
Ratio of Change in V_{REF} to Cathode Voltage	$\frac{\Delta V_{REF}}{\Delta V_K}$	V_{REF} to 10V 10V to 36V	-2.7 -2.0	-1.0 -0.4	0.3	mV/V
Reference Input Current	I_{REF}			0.7	4.0	µA
I_{REF} Temp. Deviation	ΔI_{REF}	$T_J = 0°C$ to $105°C$		0.4	1.2	µA
Minimum I_K for Regulation	$I_{K(MIN)}$			0.4	1.0	mA
Off State Leakage	$I_{K(OFF)}$	$V_{REF} = 0V$, $V_{KA} = 36V$		0.04	1000	nA
Dynamic Output Impedance	Z_{KA}	$f_Z = 1kHz$ $I_K = 1$ to 150 mA		0.15	0.5	Ω

Electrical Characterstics

at 25°C I_E @ 10 mA $V_E = V_{REF}$, unless otherwise specified)

Parameters	Symbol	Conditions	Min	Typ.	Max	Units
TLV431B (0.5%)						
Reference Voltage	V_{REF}	T_J = 0°C to 105°C	2.445	2.495	2.545	V V
ΔV_{REF} with Temp	TC			0.07	0.20	mV°C
Ratio of Change in V_{REF} to Cathode Voltage	$\frac{\Delta V_{REF}}{\Delta V_K}$	V_{REF} to 10V 10V to 36V	-2.7 -2.0	-1.0 -0.4	 0.3	mV/V
Reference Input Current	I_{REF}			0.7	4.0	µA
I_{REF} Temp. Deviation	ΔI_{REF}	T_J = 0°C to 105°C		0.4	1.2	µA
Minimum I_K for Regulation	$I_{K(MIN)}$			0.4	1.0	mA
Off State Leakage	$I_{K(OFF)}$	V_{REF} = 0V, V_{KA} = 36V		0.04	1000	nA
Dynamic Output Impedance	Z_{KA}	f_Z = 1kHz I_K = 1 to 150 mA		0.15	0.5	Ω

Note 1: Absolute Maximum ratings indicate limits beyond which damage to the device may occur. Operating ratings indicate conditions for which the device is functional, but do not guarantee specific performance limits. For guaranteed specifications and test conditions, see the Electrical Characteristics. The guaranteed specs apply only for the test conditions listed. Some performance characteristics may degrade when the device is not operated under the listed test conditions.

Calculating Average Temperature Coefficient (TC)

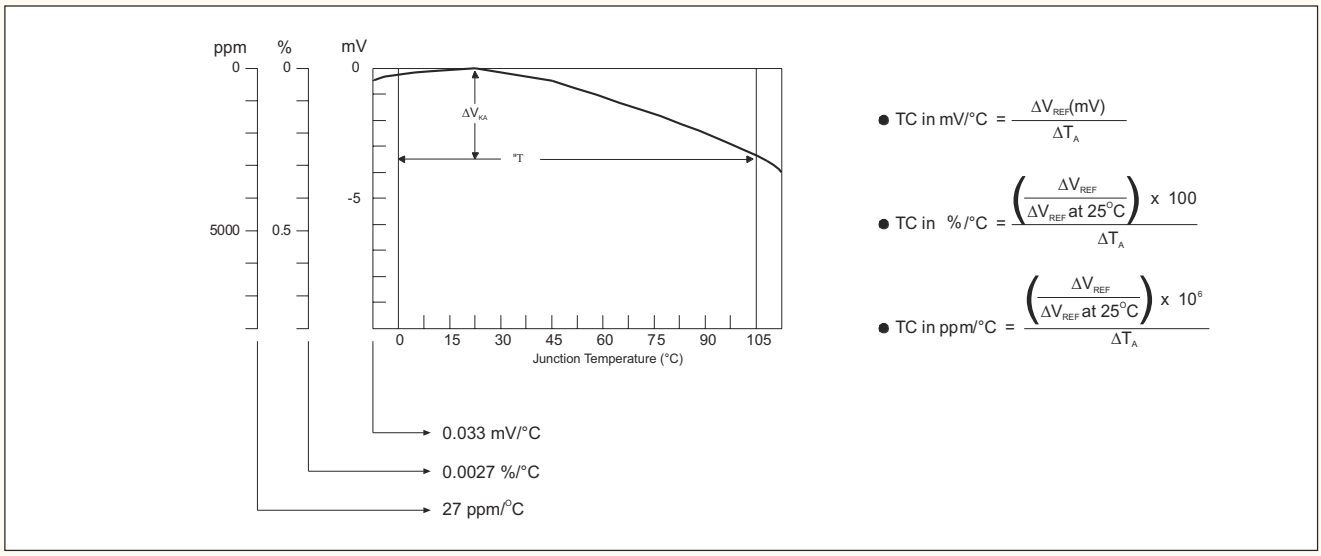

Figure 1. V_{REF} VS Temperature.

Test Circuits

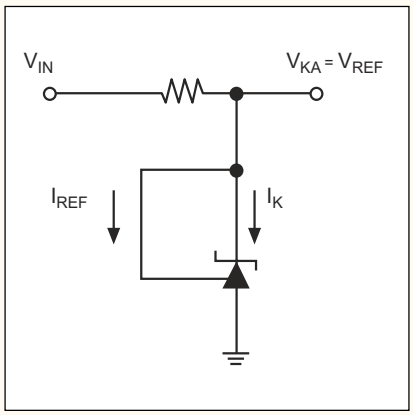

Figure 2. Test Circuit for $V_{KA} = V_{REF}$

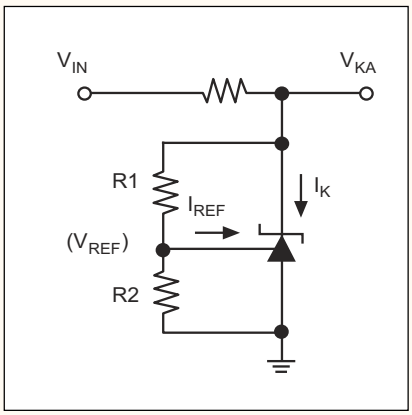

Figure 3. Test Circuit for $V_{KA} > V_{REF}$

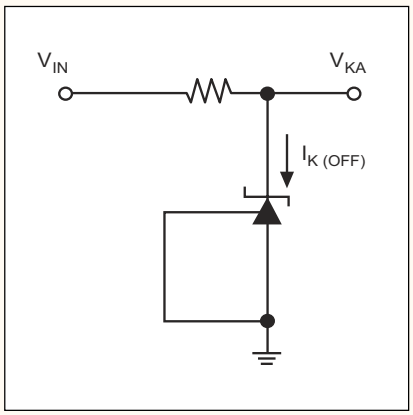

Figure 4. Test Circuit for I_{KOFF}

Typical Performance Characteristics

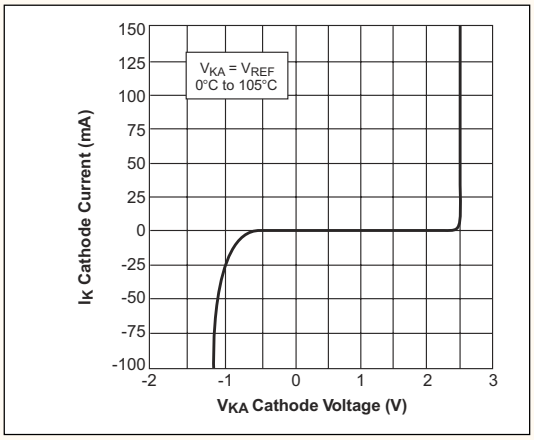

Figure 5. High Current Operating Characteristics

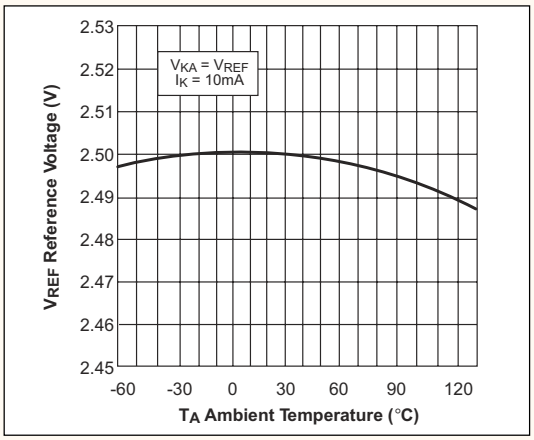

Figure 6. Reference Voltage VS Ambient Tempetature

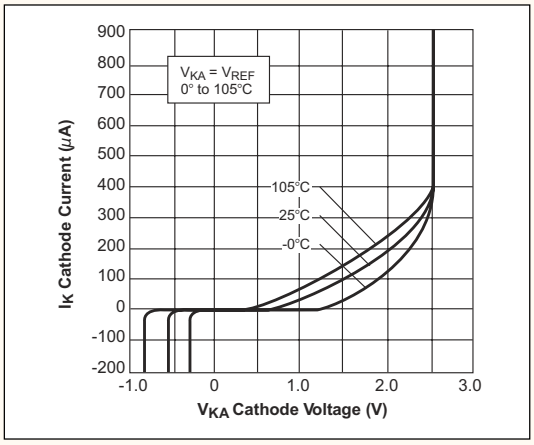

Figure 7. Low Current Operating Characteristics

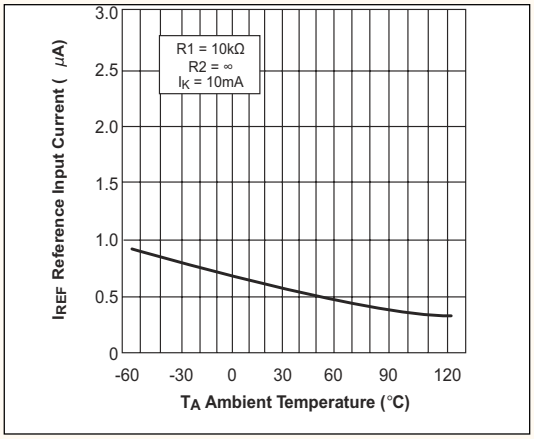

Figure 8. Reference Input Current VS Ambient Temperature

Typical Performance Characteristics

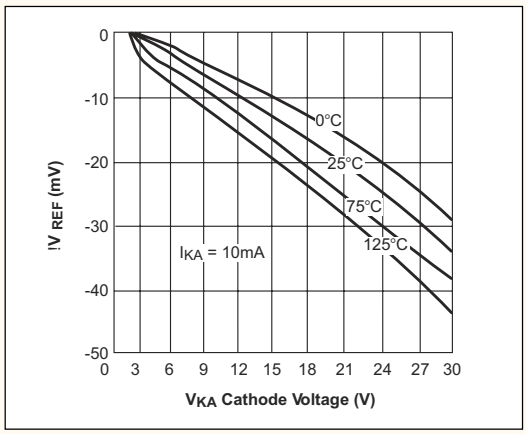

Figure 9. Reference Voltage Line Regulation VS Cathode Voltage and $T_{AMBIENT}$

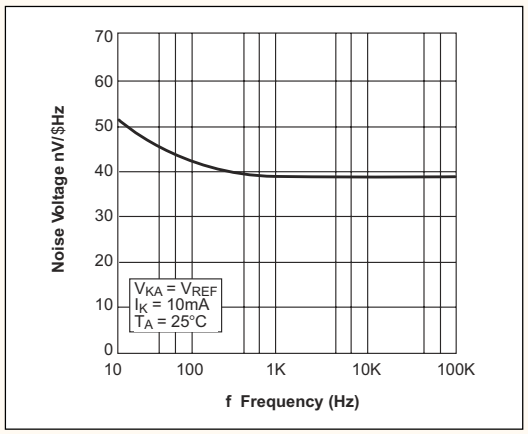

Figure 10. Noise Voltage VS Frequency

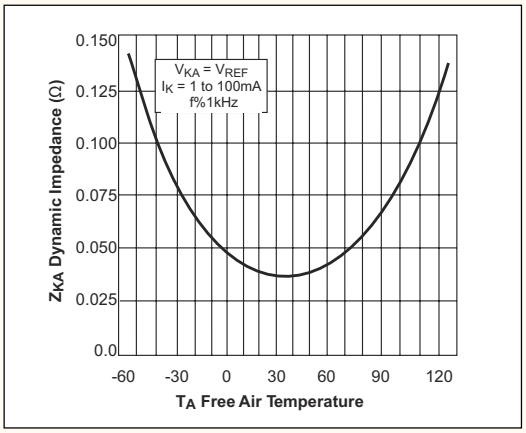

Figure 11. Low Frequency Dynamic Output Impedance VS $T_{AMBIENT}$

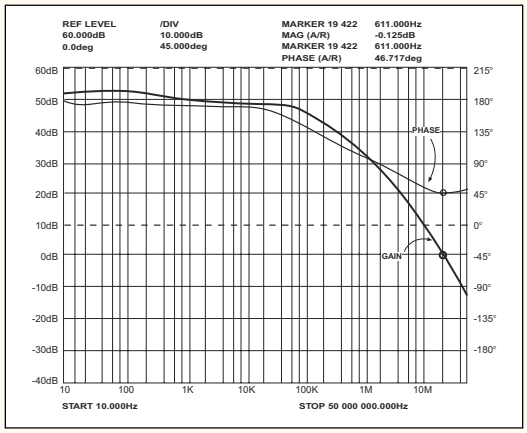

Figure 12. Small Signal Gain and Phase VS Frequency; I_K = 10mA, T_A = 25°C

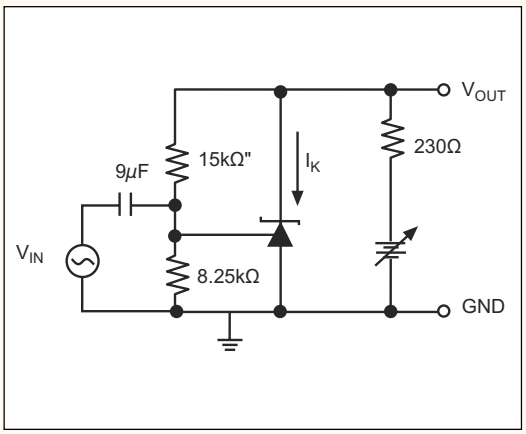

Figure 13. Test Circuit for Gain and Phase Frequency Response

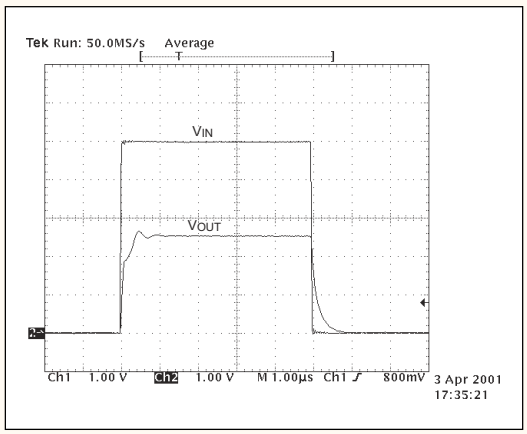

Figure 14. F_Z = 100kHz, I_K = 10mA, T_A = 25°C