Descriptions

The DW8501 is an instant On/Off LED driver for high power LED applications. At DW8501 output stage, one regulated current port is designed to provide a uniform and constant current sink for driving LEDs within a large range of V_F variations. DW8501 easily provides users a consistent current source. User may adjust the output current from up to 1.5A through an external resistor ,R_S, which gives users flexibility in controlling the light intensity of LEDs. In addition, users can precisely adjust LED brightness from 0% to 100% via output enable (EN) with Pulse Width Modulation. DW8501 also guarantees that LEDs can be cascaded to maximum 40V at the output port.

Ordering Information

Device	Marking	Package	Operating Temp
DW8501	DW8501 XXXXXX YWW	TO-252	-35°C ~ +85°C
DW8501	DW8501 XXXXXXXX YWW	SOT-223	

Features

- Constant output current invariant to supply and load voltage change
- 5V to 40V supply voltage
- Up to1.5A adjustable regulated output current
- Built-in thermal derating circuit
- Available PWM dimming control
- Output current adjusted through an external resistor
- TO-252, SOT-223 Package

Package Information

Package	Size
TO-252-5L	6.5x5.5x2.3(mm)
SOT-223-5L	6.5x3.5x1.8(mm)

Applications

- LED light bulbs
- Signage and decorative LED lighting
- General lighting of flat panel displays
- RGB backlighting LED driver
- Current stabilizer with DC/DC or AC/DC
- Automotive lighting
- General purpose constant current source

Typical Application Circuit

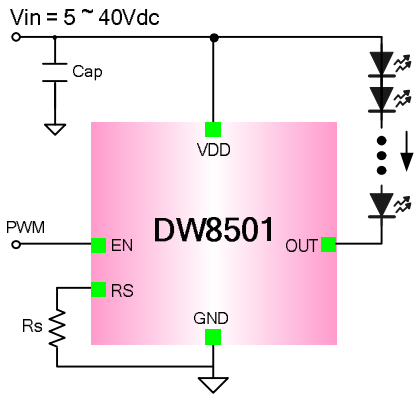

深圳四海恒通科技
www.gofotech.com

GOFO 深圳四海恒通科技 详情尽在: http://www.gofotech.com
TEL: 0755-8398 3377, 8301 8377
您专业的电源管理IC、LED驱动IC、MOSFET、肖特基...供应商!

Pin Connection

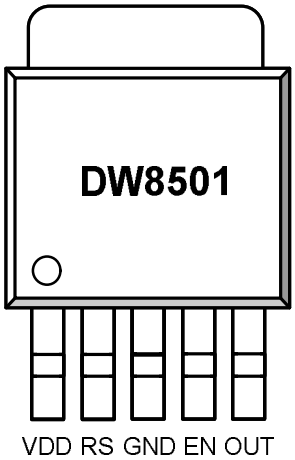

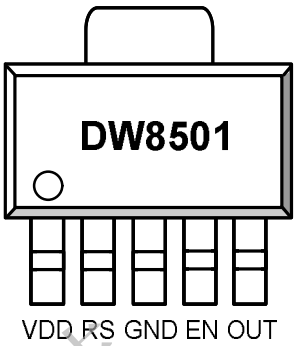

Pin Description

Pin	Name	Description
1	VDD	Supply voltage input
2	RS	Output current set input. Connect a resisor from RS to GND to set the LED bias current
3	GND	Ground
4	EN	Output stage enable control pin. High enable the OUT pin. Dimming control is possible by PWM (Pulse width modulation). Typically, It operates under 30kHz.
5	OUT	Output pin. Sink current is decided by the current on R_{SET} connected to RS
6	HS	Heat sink, normally connected GND

深圳四海恒通科技
www.gofotech.com

Absolute Maximum Ratings

Characteristics		Symbol	Value	Unit
Supply voltage		V_{DD}	41	V
Output voltage		V_{OUT}	23	V
Enable voltage		V_{EN}	41	V
Reference voltage		V_{RS}	5	V
Package thermal resistance	TO-252-5L	θ_{JA}	80	℃/W
	SOT-223-5L	θ_{JA}	100	℃/W
Operating temperature		T_{OPR}	-35~+85	℃
Storage Temperature		T_{STG}	-55~+150	℃

Note 1. θja is measured in the convection at Ta=25℃ on a high effective thermal conductivity test board(4 Layers, 2S2P) of JEDEC 51-7 thermal measurement standard.

深圳四海恒通科技 www.gofotech.com

Recommended Operation Conditions

Characteristics	Symbol	Min.	Typ.	Max.	Unit
Supply voltage	V_{DD}	5	-	40	V
Enable voltage	V_{EN}	-	-	40	V
Output sink current	I_{OUT}	-	-	1.5	A

Electrical Characteristics

V_{DD} = 24V, EN= 0~24V, Ta = -35℃~+85℃, unless otherwise specified. Typical values are at T_A=+25℃

Characteristics	Symbol	Conditions	Min.	Typ.	Max.	Unit
Input supply voltage	V_{DD}		5	-	40	V
Output linearity voltage	V_{OUT_LINE}	V_{DD}=24V, I_{SET}= 300mA,	-	-	3	V
Output current	I_{OUT}		-	-	1.5	A
Quiescent Current	I_{Q_ON}	EN = 24V	0.8	1	1.5	mA
	I_{Q_OFF}	EN = 0V	85	120	250	uA
EN input leakage current	I_{EN_LIK}		30	45	60	uA
Input high voltage	V_{IH}		2	-	-	V
Input low voltage	V_{IL}		-	-	0.8	V
LED output drop-out voltage	V_{DROP}	V_{DD}=40V , I_{SET}=300mA	-	300	-	V
Thermal derating	T_D		-	140	-	℃
Thermal derating hysteresis	T_{DHYS}		-	15	-	℃
Rset Voltage	V_{SET}		0.59	0.61	0.63	V
Output current	I_{OUT}	2KΩ	285	300	315	mA

Note : Output dropout voltage : 90% x I_{OUT}

深圳恒海恒通科技 www.gofotech.com

Block Diagram

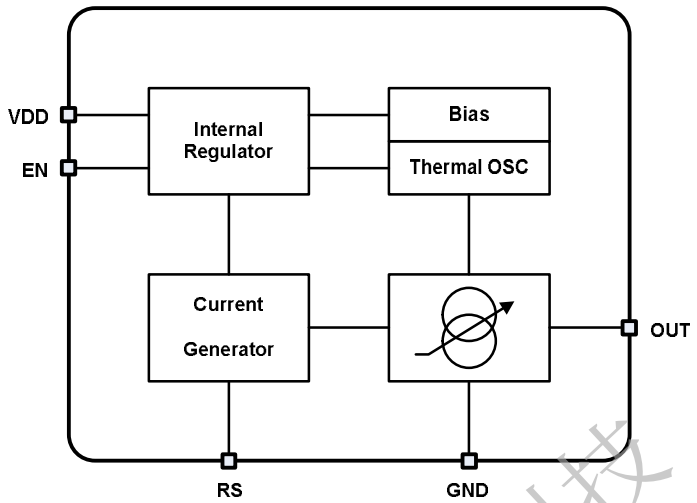

Application notice

Setting Output Current

Iout [mA] = (610[mV]/Rset[ohm])X 1000

Rset(kΩ)	Iout(mA)
4	152
2	300
1.22	500
1.02	600
0.76	800
0.68	900
0.61	1000

Power sequence

There is an electrostatic diode between VDD and EN.
When dimming control, It must input EN signal after inputs VDD. (t ≥ 1ms)
If not use Dimming control, EN connect to VDD.

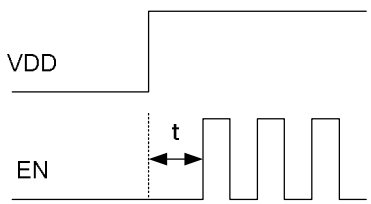

Dimming Power sequence

深圳四海恒通科技 www.gofotech.com

Electrical Characteristics Curves

V_{DD} = 12V, V_{OUT} =2V, Ta = -35℃~+85℃, unless otherwise specified. Typical values are at T_A=+25℃

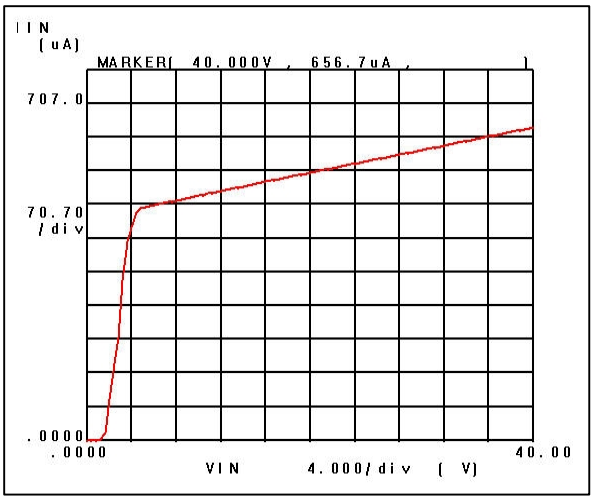

Quiescent vs. VDD

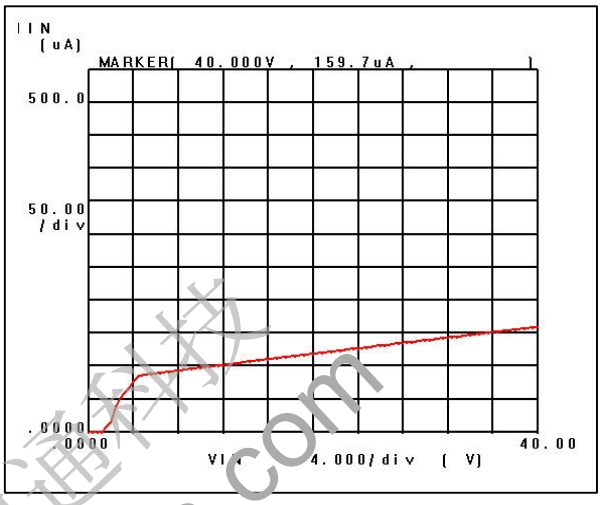

Ishutdown vs. VDD

深圳四海恒通科技
www.gofotech.com

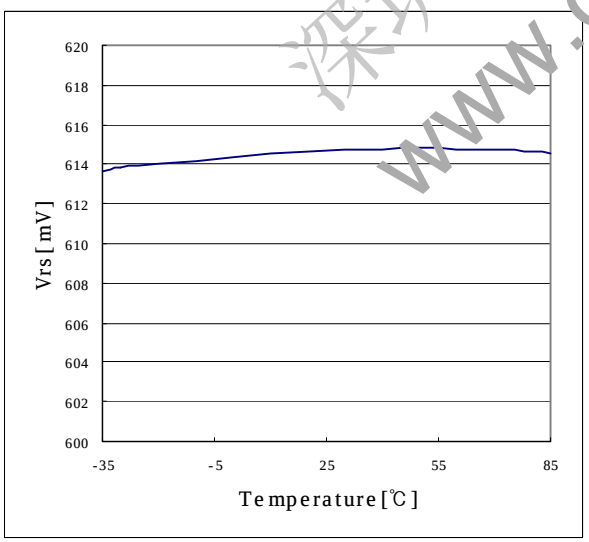

Vrs vs. Temp.

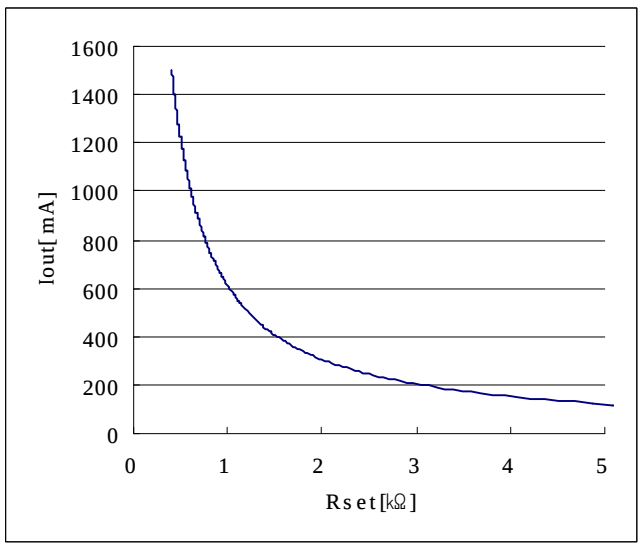

IOUT vs. Rset

Electrical Characteristics Curves (continued)

V_{DD} = 12V, V_{OUT} =2V, Ta = -35℃~+85℃, unless otherwise specified. Typical values are at T_A=+25℃

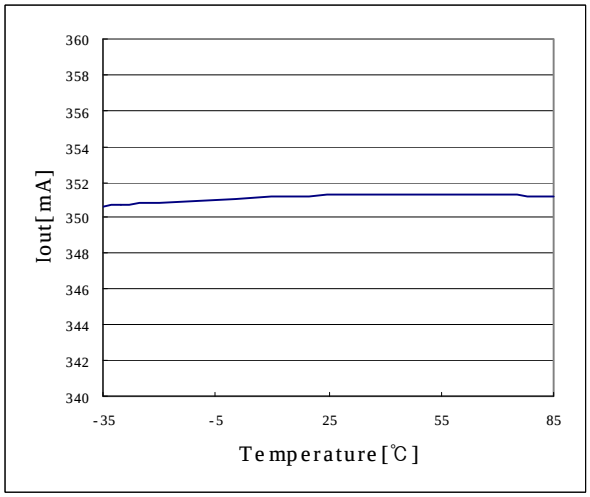

IOUT vs. Temp.

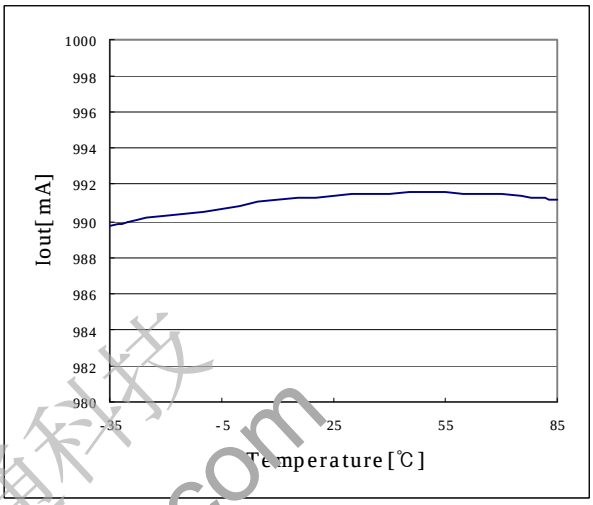

IOUT vs. Temp.

深圳四海恒通科技
www.gofotech.com

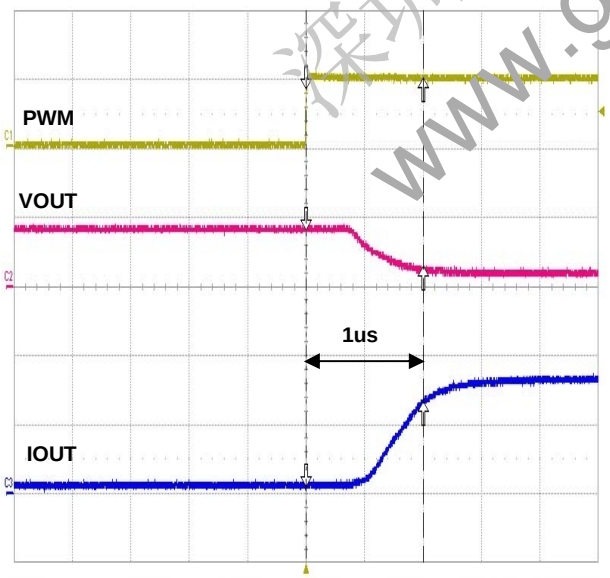

PWM Rising Time

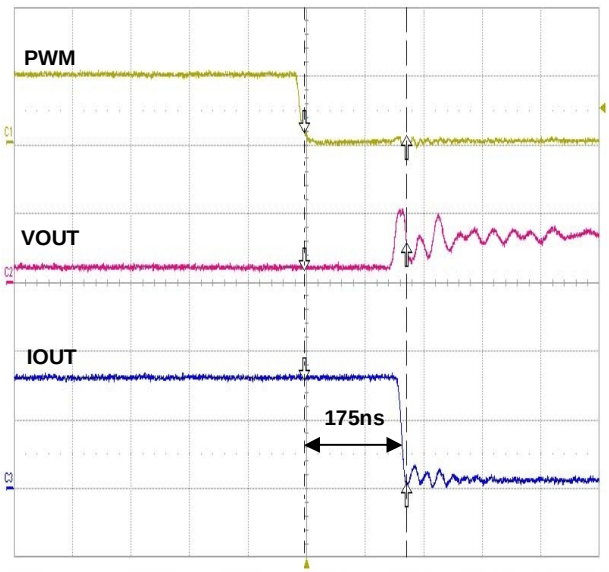

PWM Falling Time

Typical Applications

※ LED VF = 3.3V, 1W Power LED

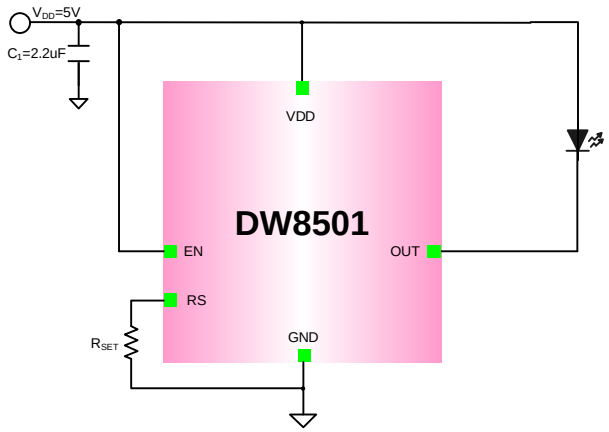

Figure 1. VDD=5V

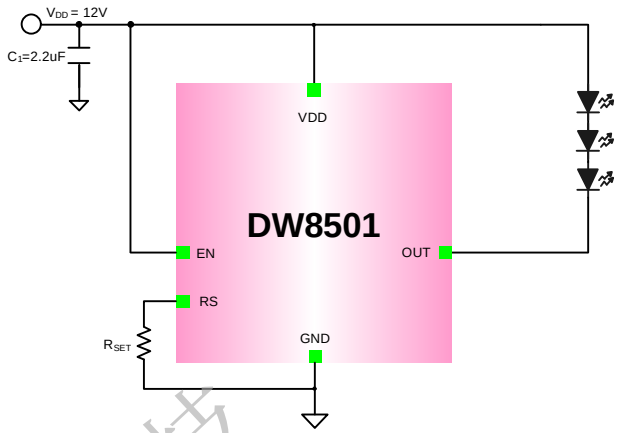

Figure 2. VDD=12V

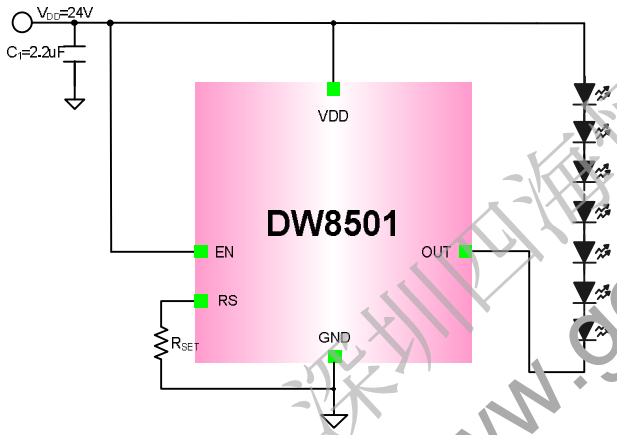

Figure 3. VDD=24V

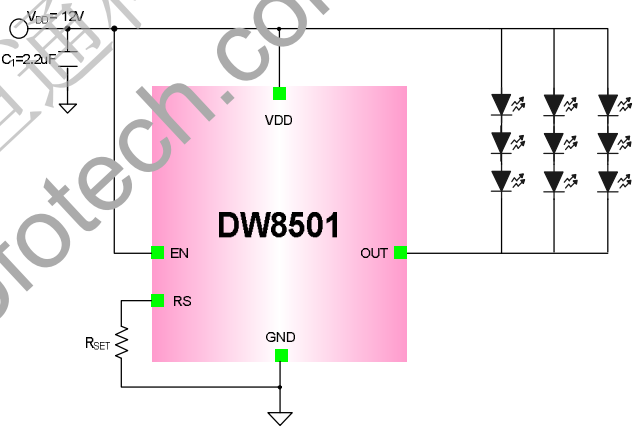

Figure 4. VDD=12V, 9 LED

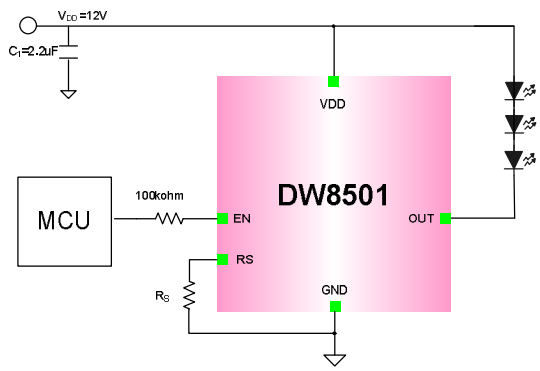

Figure 5. PWM Typical Application

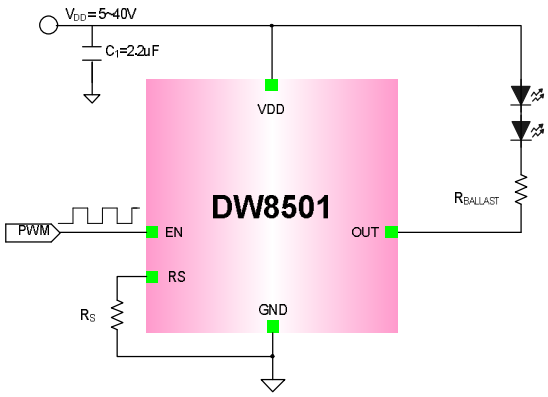

Figure 6. $R_{VALLAST}$ Application

深圳四海恒通科技
www.gofotech.com

Package Dimension (TO-252-5L 6.5 x 9.9 x 2.3)

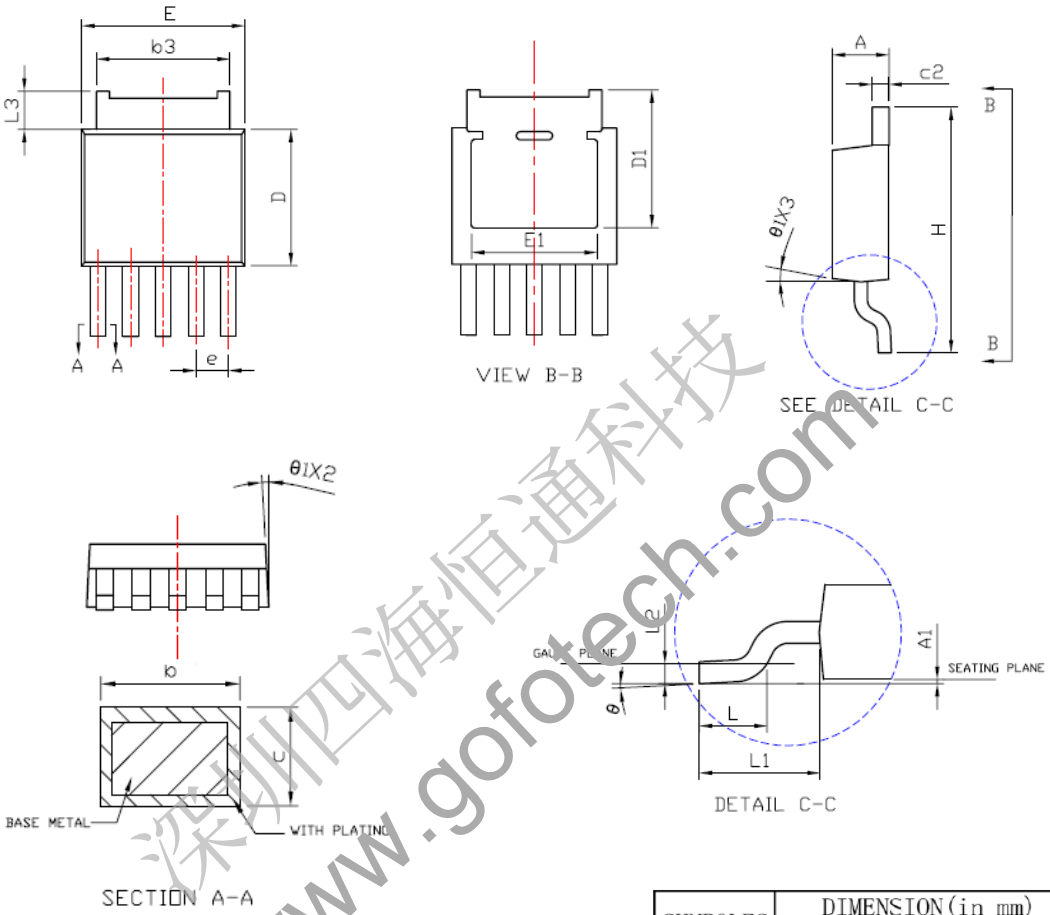

深圳四海恒通科技
www.gofotech.com

SYMBOLES	DIMENSION(in mm)	
	Min.	Max.
A	2.19	2.38
A1	0	0.127
b	0.51	0.71
b3	4.32	5.46
c	0.46	0.61
c2	0.46	0.89
D	5.33 *	6.22
D1	4.83	--
E	6.35	6.73
E1	4.32	5.33
e	1.27 BSC	
H	9.4	10.41
L	1.4	1.78
L1	2.67 REF *	
L2	0.508 BSC	
L3	0.89	2.03 *
L4	--	1.02
θ	0 °	8 ° *
θ1	0 °	15 °

Foot Print

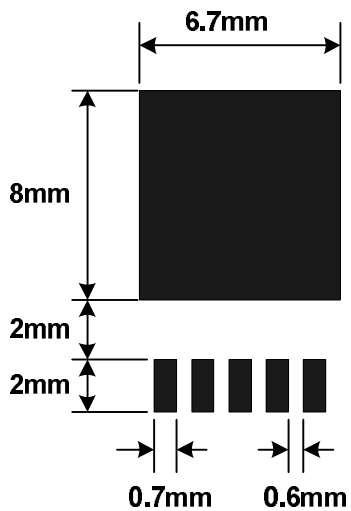

Package Dimension (SOT-223-5L 6.5 x 7 x 1.8)

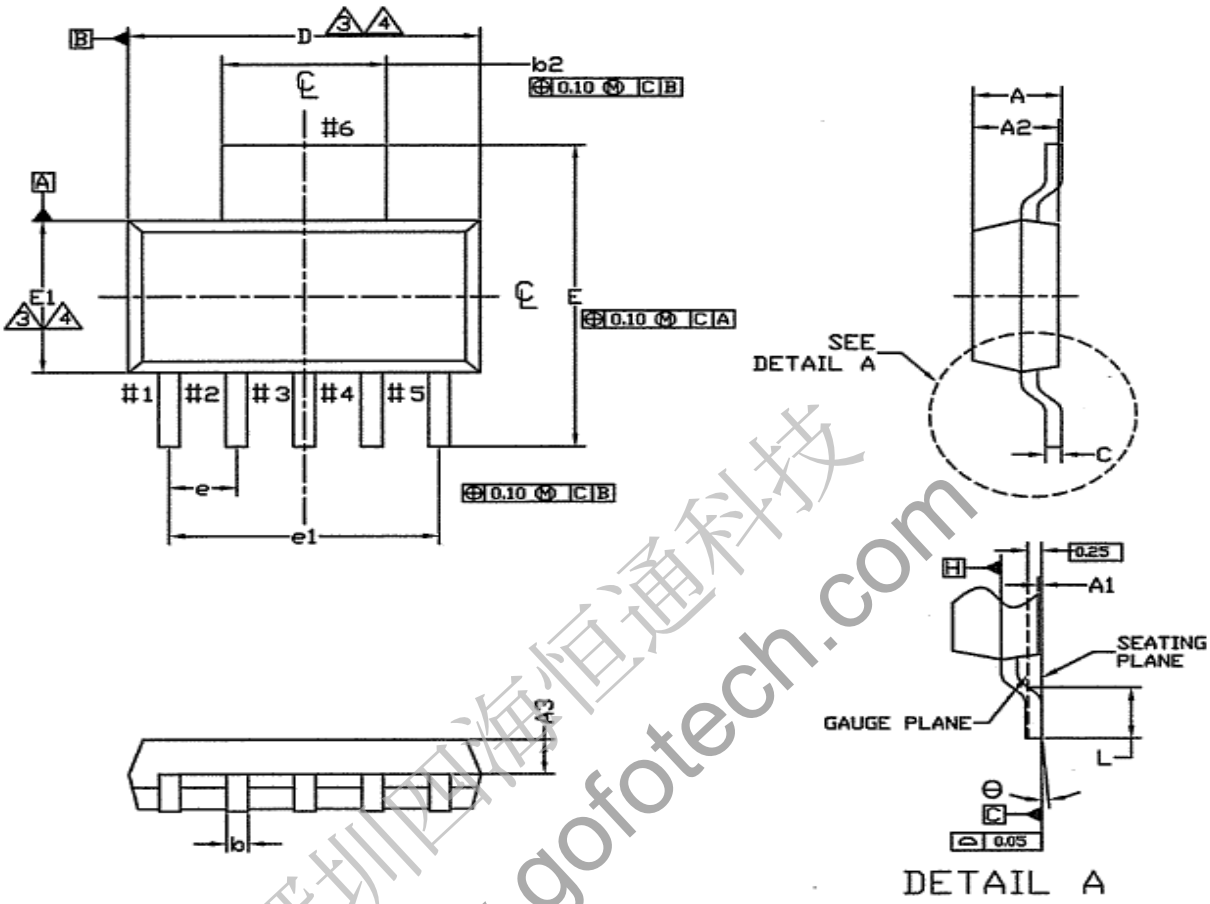

深圳西海恒通科技
www.gofotech.com

Foot Print

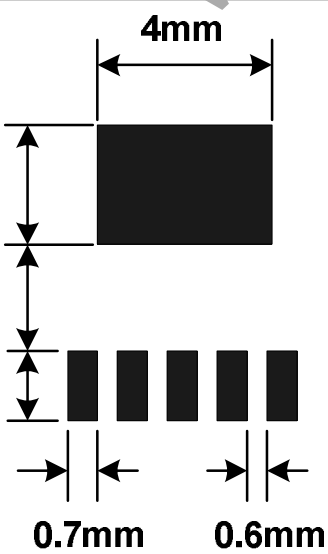

SYMBOL	ALL DIMENSIONS IN MILLIMETERS		
	MINIMUM	NORMAL	MAXIMUM
A	–	–	1.80
A1	0.02	0.06	0.10
A2	1.55	1.60	1.65
A3	0.90 REF.		
b	0.41	0.457	0.51
b2	2.95	3.00	3.05
c	0.24	0.28	0.32
D	6.45	6.50	6.55
E	6.86	7.00	7.26
E1	3.45	3.50	3.55
e	1.27 BSC.		
e1	5.08 BSC.		
L	0.91	–	1.14
θ	0°	4°	8°