Voltage Detectors , ME2801 Series

General Description

ME2801 Series are highly precise , low power consumption voltage detectors,manufactured using CMOS technologies. Detect voltage is extremely accurate with minimal temperature drift.CMOS output configurations are available.

Features

- Highly accuracy： ±1%
- Low power consumption：TYP 0.7uA (Vin=1.5V)
- Detect voltage range：2.0V~4.8V in 0.1V increments
- Operating voltage range：0.7V~7V
- Detect voltage temperature characteristics：TYP±100ppm/℃
- Output configuration： CMOS
- Package： SOT-23-3，SOT-89-3，TO-92

Selection Guide

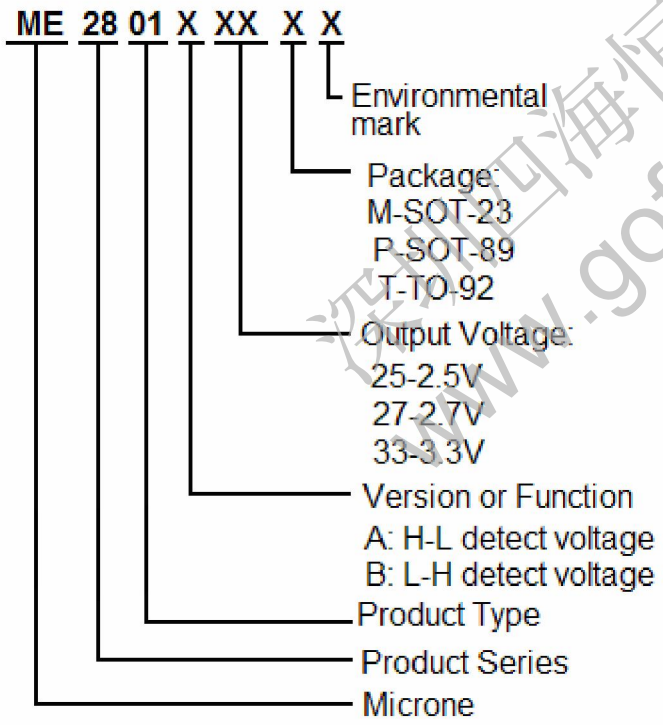

Typical Application

- Microprocessor reset circuitry
- Memory battery back-up circuits
- Power-on reset circuits
- Power failure detection

Typical Application Circuit

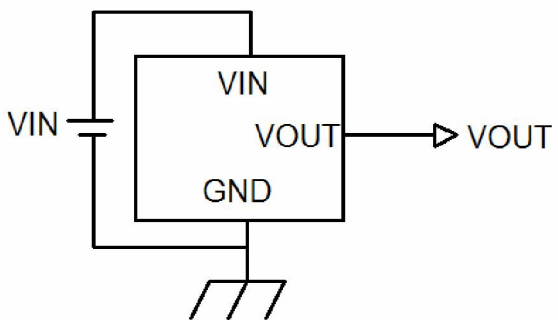

深圳四海恒通科技 www.gofotech.com

GOFO 深圳四海恒通科技 详情尽在: http://www.gofotech.com TEL: 0755-8398 3377, 8301 8377
您专业的电源管理IC、LED驱动IC、MOSFET、肖特基...供应商!

Pin Configuration

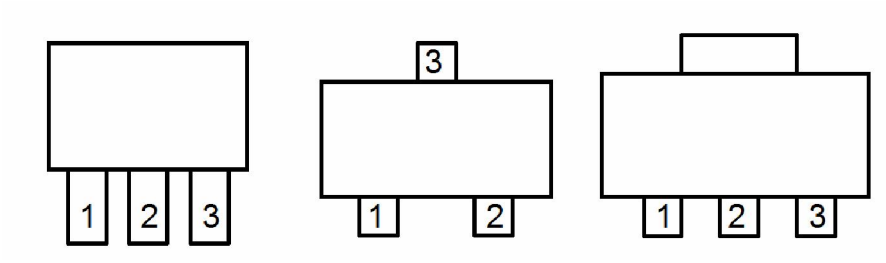

TO-92 SOT-23-3 SOT-89-3

Pin Assignment

ME2801AXX/ME2801BXX

Pin Number				Pin Name	Functions
SOT-23-3	SOT-89-3	TO-92(T)	TO-92(T1)		
2	3	3	2	GND	Ground
1	1	1	3	VOUT	Output Voltage
3	2	2	1	VIN	Input Voltage

Block Diagram

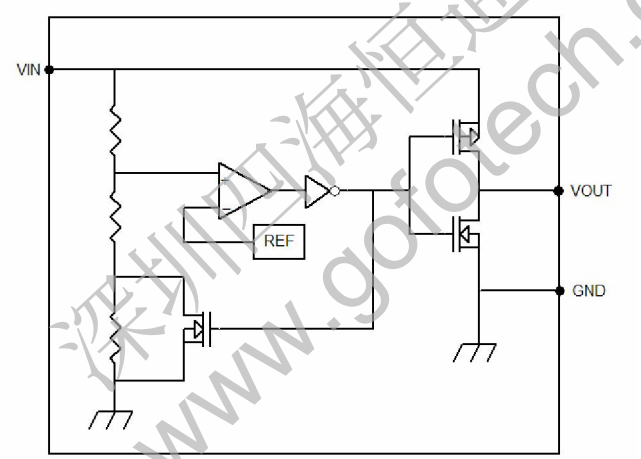

深圳四海恒通科技 www.gofotech.com

Absolute Maximum Ratings

PARAMETER			SYMBAL	RATINGS	UNITS
V_{IN} Input Voltage			V_{IN}	8	V
Output Current			Iout	50	mA
Output Voltage	CMOS		Vout	Vss-0.3~Vin+0.3	V
	N-ch open drain			Vss-0.3~12	
Continuous Total Power Dissipation		SOT-23-3	Pd	150	mW
		SOT-89-3		500	
		TO-92		300	
Operating Ambient Temperature			T_{Opr}	-40~+85	℃
Storage Temperature			T_{stg}	-40~+125	℃
Soldering temperature and time			T_{solder}	260℃, 10s	

Electrical Characteristics

(V_{DF}(S)=2.0V to 4.8V±1% ,Ta=25°C ,unless otherwise noted)

Parameter	Symbol	Conditions	Min.	Typ.	Max.	Units
VDF	Detect Voltage		VDF(S)*0.99	VDF(S)	VDF(S)*1.01	V
VHYS	Hysteresis Range		VDF*0.02	VDF*0.05	VDF*0.08	V
Iss	Supply Current	Vin=1.5V	-	0.7	2.7	uA
		Vin=2.0V	-	0.8	3.2	
		Vin=3.0V	-	0.9	3.6	
		Vin=4.0V	-	1.0	3.8	
		Vin=5.0V	-	1.1	4.3	
VIN	Operating Voltage	VDF(T)=1.6V to 6.0V	0.7	-	7	V
IOUT	Output Current	N-ch，VDS=0.5V VIN=1.0V =2.0V =3.0V =4.0V =5.0V	 1.0 3.0 5.0 6.0 7.0	 2.2 7.7 10.1 11.5 13.0		mA
		P-ch，VDS=2.1V VIN=8.0V		-10.0	-2.0	mA
ΔVDF/(Δtopr*VDF)	Temperature characteristics	-40℃≤Topr≤85℃		±100		ppm/℃

Note： 1、VDF(S) ：Specified Detection Voltage value
2、VDF ：Actual Detection Voltage value
3、Release Voltage：VDR=VDF+VHYS (ME2801A 系列)
VDR=VDF-VHYS (ME2801B 系列)

深圳四海恒通科技 www.gofotech.com

Functional Description：

1、 When input voltage (V_{IN}) rises above detect voltage (V_{DF}), output voltage (V_{OUT}) will be equal to V_{IN}.

2、 When input voltage (V_{IN}) falls below detect voltage (V_{DF}), output voltage (V_{OUT}) will be equal to the ground voltage (V_{SS}) level.

3、 When input voltage (V_{IN}) falls to a level below that of the minimum operating voltage (V_{MIN}), output will become unstable. In this condition, V_{IN} will equal the pulled-up output (should output be pulled-up.)

4、 When input voltage (V_{IN}) rises above the ground voltage (V_{SS}) level, output will be unstable at levels below the minimum operating voltage (V_{MIN}). Between the VMIN and detect release voltage (V_{DR}) levels, the ground voltage (V_{SS}) level will be maintained.

5、 When input voltage (V_{IN}) rises above detect release voltage (V_{DR}), output voltage (V_{OUT}) will be equal to V_{IN}.

6、 The difference between V_{DR} and V_{DF} represents the hysteresis range.

Timing Chart：

ME2801AXX:

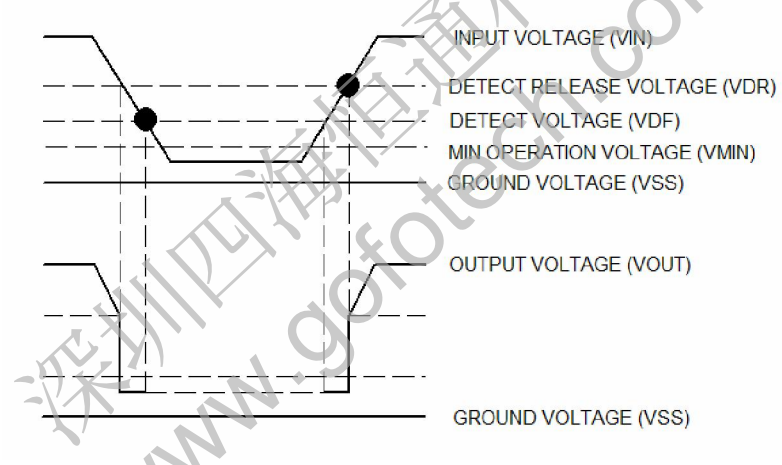

深圳四海恒通科技 www.gofotech.com

ME2801BXX:

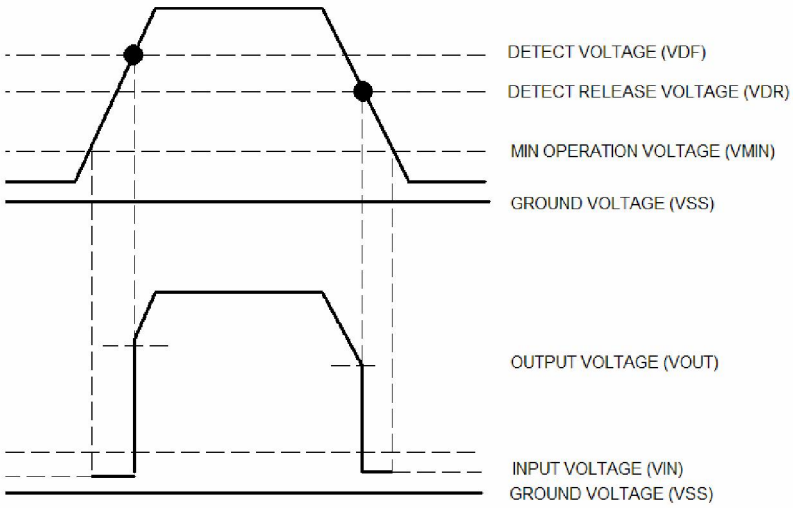

Directions for use：

1、 Please use this IC within the stated maximum ratings. Operation beyond these limits may cause degrading or permanent damage to the device.

2、When a resistor is connected between the V_{IN} pin and the input with CMOS output configurations, oscillation may occur as a result of voltage drops at R_{IN} if load current(I_{OUT}) exists.(refer to the Oscillation Description(1) below)

3、When a resistor is connected between the V_{IN} pin and the input with CMOS output configurations, oscillation may occur as a result of through current at the time of voltage release even if load current(I_{OUT}) does not exist. (refer to the Oscillation Description(2) below)

4、With a resistor connected between the V_{IN} and the input, detect and release voltage will rise as a result of the IC's supply current flowing through the V_{IN} pin.

5、In order to stabilize the IC's operations, please ensure that V_{IN} pin's input frequency's rise and fall times are more than several u Sec/V.

Oscillation Description：

1、 Output current oscillation with the CMOS output configuration

When the voltage applied at IN rises, release operations commence and the detector's output voltage increase. Load current(I_{OUT}) will flow at R_L. Because a voltage drop(R_{IN}*I_{OUT}) is produces at the R_{IN} resistor, located between the input(IN) and the V_{IN} pin. The load current will flow via the IC's pin. The voltage drop will also lead to a fall in the voltage level at the V_{IN} pin. When the V_{IN} pin voltage level falls below the detect voltage level, detect operations will commence. Fllowing detect operations, load current flow will cease and since voltage drop at R_{IN} will disapper, the voltage level at the V_{IN} pin will rise and release operations will begin over again. Oscillation may occur with this "release-detect-release" repetition. Futher, this condition will also appear via means of a similar mechanism during detect operations.

2、 Oscillation as a result of through current

Since the ME2801 series are CMOS IC's, through current will flow when the IC's internal circuit switching operates(during release and detect operations). Consequently, oscillation is liable to occur as a result of drops in voltage at the through current's resistor(R_{IN}) during release voltage operations.(refer to diagram 2) since hysteresis exists during detect operations, oscillation is unlikely to occur.

深圳四海恒通科技 www.gototech.com

Type Characteristics

1、 SUPPLY CURRENT VS. INPUT VOLTAGE

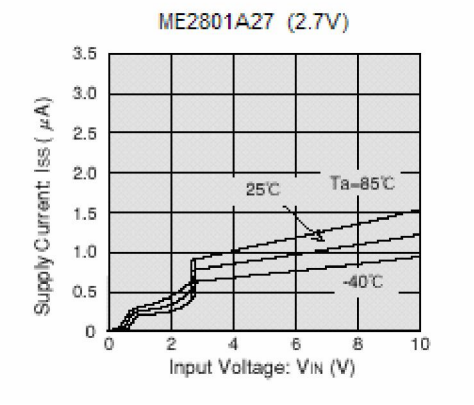

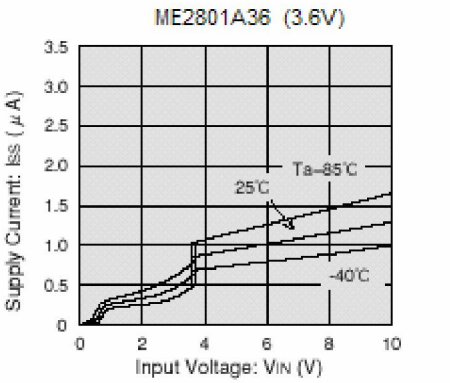

2、 DETECT,RELEASE VOLTAGE VS. AMBIENT TEMPERATURE

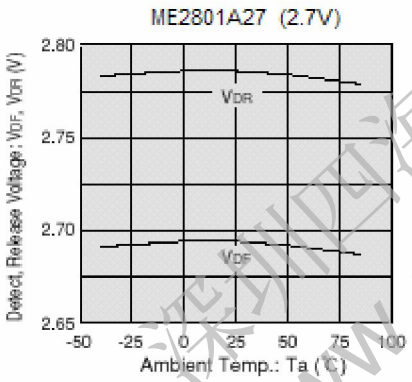

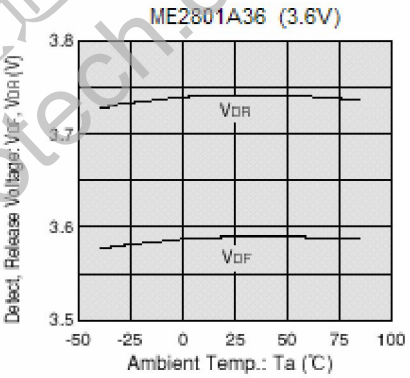

3、 OUTPUT VOLTAGE VS. INPUT VOLTAGE

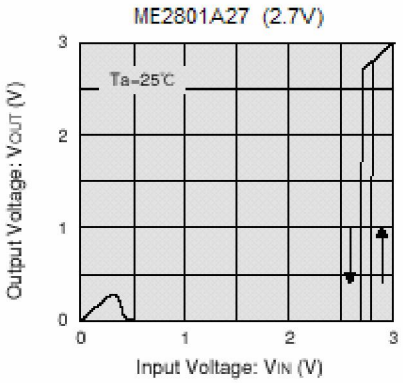

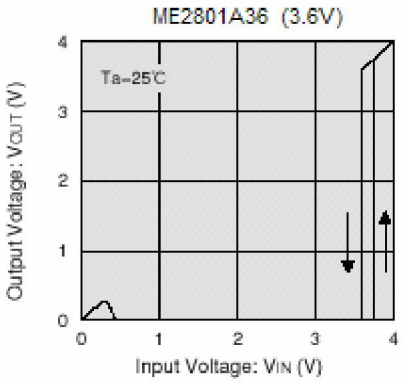

深圳四海恒通科技 www.gofotech.com

Package Information

・SOT-89-3

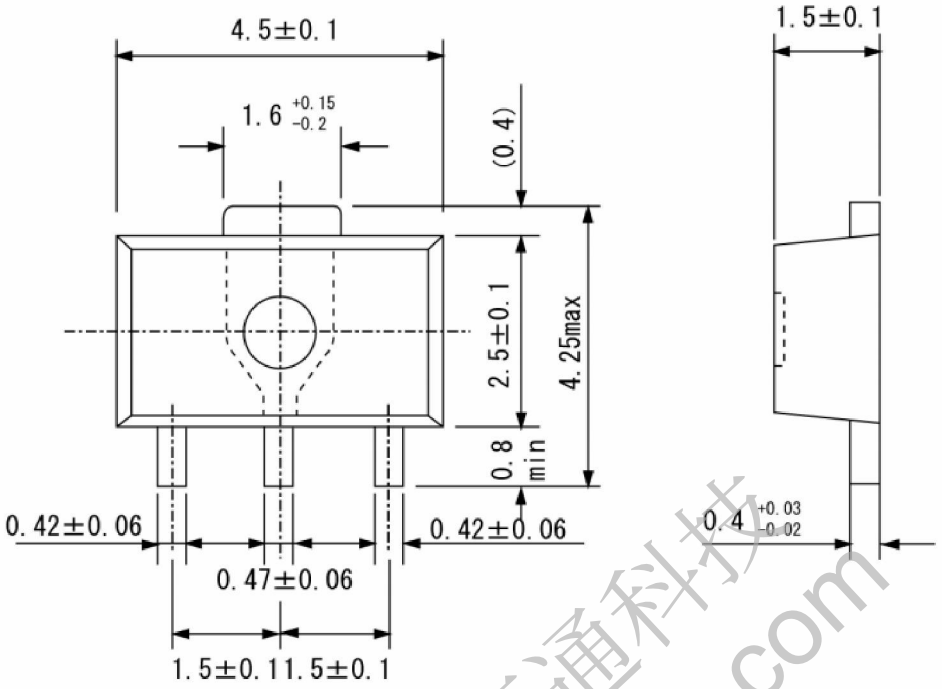

・SOT-23-3

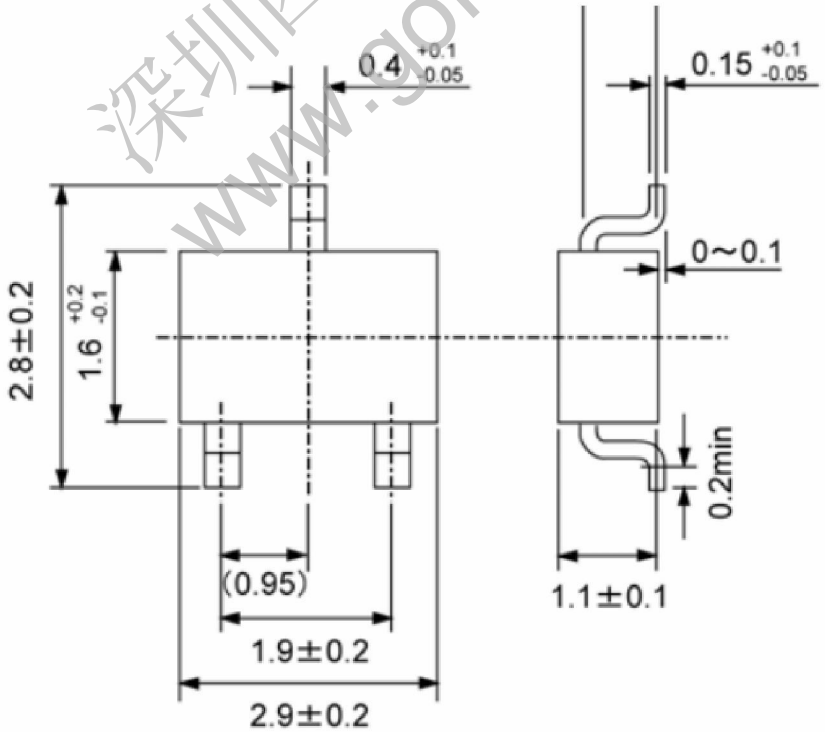

深圳四海恒通科技
www.gofotech.com

• TO-92

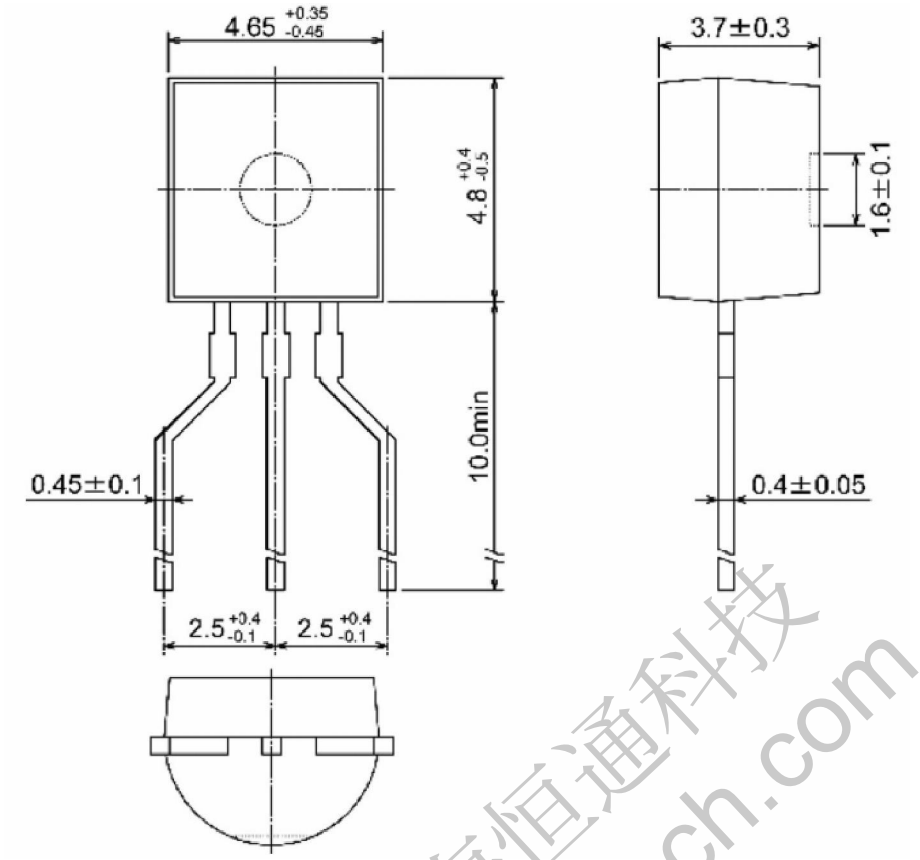

深圳四海恒通科技
www.gofotech.com

深圳四海恒通科技
www.gofotech.com

- The information described herein is subject to change without notice.
- Nanjing Micro One Electronics Inc is not responsible for any problems caused by circuits or diagrams described herein whose related industrial properties, patents, or other rights belong to third parties. The application circuit examples explain typical applications of the products, and do not guarantee the success of any specific mass-production design.
- Use of the information described herein for other purposes and/or reproduction or copying without the express permission of Nanjing Micro One Electronics Inc is strictly prohibited.
- The products described herein cannot be used as part of any device or equipment affecting the human body, such as exercise equipment, medical equipment, security systems, gas equipment, or any apparatus installed in airplanes and other vehicles, without prior written permission of Nanjing Micro One Electronics Inc.
- Although Nanjing Micro One Electronics Inc exerts the greatest possible effort to ensure high quality and reliability, the failure or malfunction of semiconductor products may occur. The user of these products should therefore give thorough consideration to safety design, including redundancy, fire-prevention measures, and malfunction prevention, to prevent any accidents, fires, or community damage that may ensue.