SL20T100

20.0A Surface Mount Schottky Barrier Rectifiers

Features

- Schottky Barrier Chip
- High Thermal Reliability
- Patented Super Barrier Rectifier Technology
- High Forward Surge Capability
- Ultra Fow Power Loss,High Efficiency
- Excellent High Temperature Stability
- Plastic material-UL flammability 94V-0

TO-277

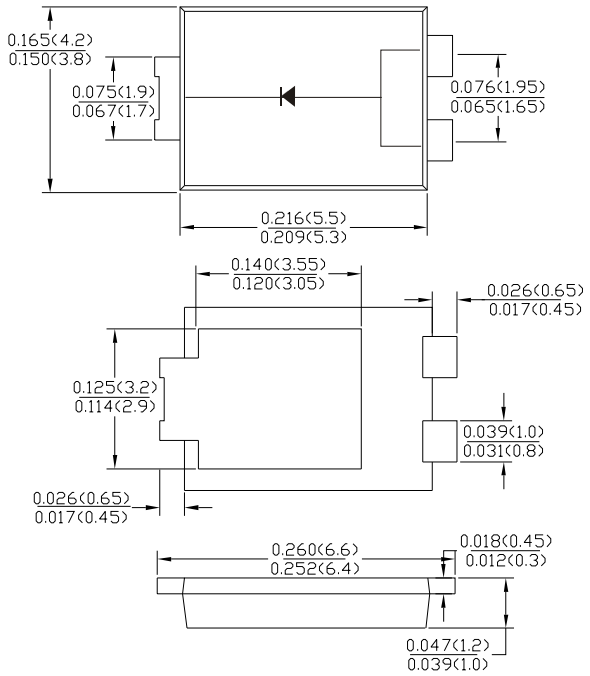

Dimiensions inches and (milimenters)

Mechanical Data

- Case: TO-277, molded plastic
- Terminals:Plated Leads Solderable per MIL-STD-202,Method 208
- Polarity:Cathode Band
- Mounting Position:Any
- Marking:Type Number
- Lead Free:For RoHS/Lead Free Version

Maximum Ratings and Electrical Characteristics @T_A =25℃ unless otherwise specified

Single Phase,half wave,60Hz,resistive or inductive load.For capacitive load,derate current by 20%.

Parameter	Symbol	SL20T100	Unit
Maximum repetitive peak reverse voltage	V_{RRM}	100	V
Maximum rms voltage	V_{RMS}	70	V
Working Peak Reverse Voltage	V_{RWM}	100	V
Maximum dc blocking voltage	V_R	100	V
Maximum average forward rectified current	$I_{F(AV)}$	20	A
Peak forward surge current : 8.3ms single half sine-wave superimposed on rated load	I_{FSM}	300	A
Peak Repetitive Reverse Current at tp=2 μs, 1kHZ	I_{RRM}	1.0	A
Typical thermal resistance (Note 1) (Note 2)	$R_{\theta JA}$ $R_{\theta JC}$	110 3	°C/W
Operating junction temperature range	T_J	-65 to +150	℃
storage temperature range	T_{STG}	-65 to +175	℃

Note : 1. Mounted on a FR4 PCB, single-sided copper, mini pad.
2. Mounted on a 10cm*10cm*1mm copper pad area

ELECTRICAL CHARACTERISTICS(T_A=25°C unless otherwise noted)

PARAMETER	SYMBOL	TEST CONDITIONS		MIN.	TYP.	MAX.	UNIT
Instantaneous forward voltage	V_F	I_F=10A I_F=20A	T_J=25°C	- -	0.54 0.67	- 0.75	V
		I_F=10A I_F=20A	T_J=125°C	- -	0.49 0.62	- 0.65	V
Reverse current	I_R	V_R=100V	T_J=25°C T_J=125°C	- -	30 20	200 45	μA mA

Fig.1 Forward Current Derating Curve

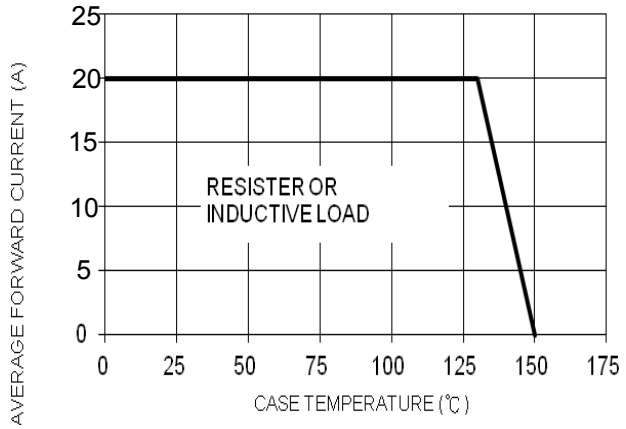

Fig.2 Typical Junction Capacitance

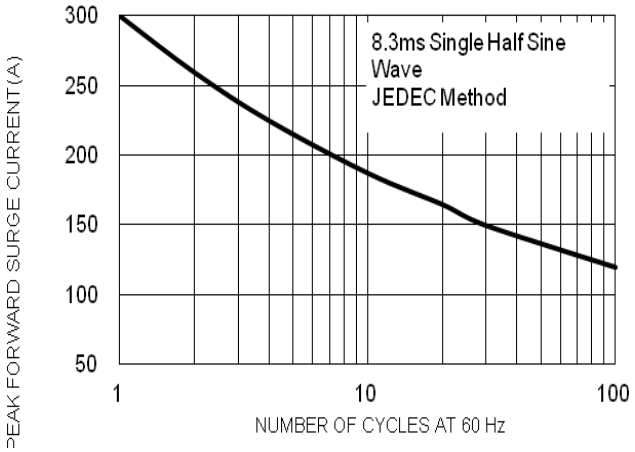

Fig.3 Typical Reverse Characteristics

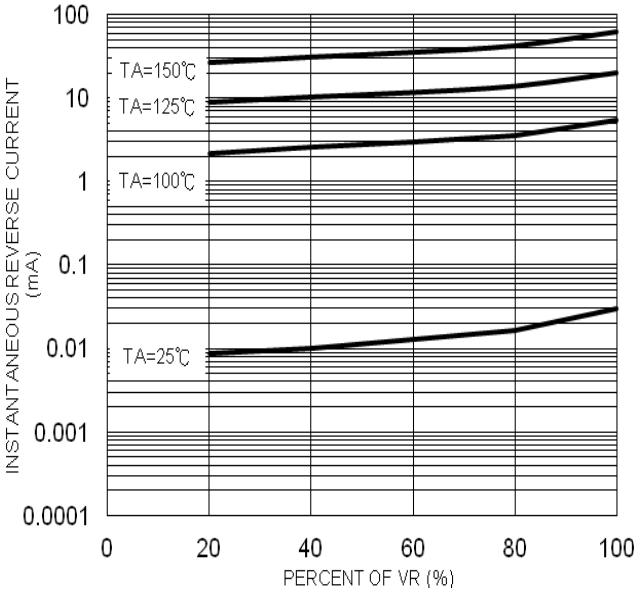
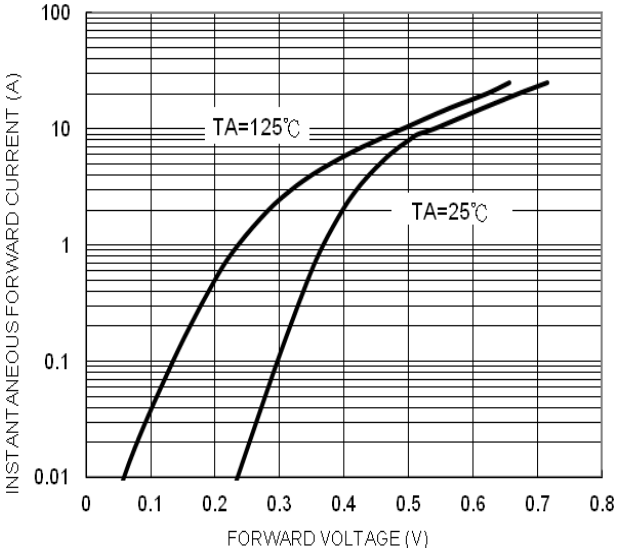
Fig.4 Typical Forward Characteristics