查询AT89S51供应商 捷多邦，专业PCB打样工厂，24小时加急出货

8-bit Microcontroller with 4K Bytes In-System Programmable Flash

AT89S51

Features

- Compatible with MCS®-51 Products
- 4K Bytes of In-System Programmable (ISP) Flash Memory
  - Endurance: 1000 Write/Erase Cycles
- 4.0V to 5.5V Operating Range
- Fully Static Operation: 0 Hz to 33 MHz
- Three-level Program Memory Lock
- 128 x 8-bit Internal RAM
- 32 Programmable I/O Lines
- Two 16-bit Timer/Counters
- Six Interrupt Sources
- Full Duplex UART Serial Channel
- Low-power Idle and Power-down Modes
- Interrupt Recovery from Power-down Mode
- Watchdog Timer
- Dual Data Pointer
- Power-off Flag
- Fast Programming Time
- Flexible ISP Programming (Byte and Page Mode)

Description

The AT89S51 is a low-power, high-performance CMOS 8-bit microcontroller with 4K bytes of In-System Programmable Flash memory. The device is manufactured using Atmel's high-density nonvolatile memory technology and is compatible with the industry-standard 80C51 instruction set and pinout. The on-chip Flash allows the program memory to be reprogrammed in-system or by a conventional nonvolatile memory programmer. By combining a versatile 8-bit CPU with In-System Programmable Flash on a monolithic chip, the Atmel AT89S51 is a powerful microcontroller which provides a highly-flexible and cost-effective solution to many embedded control applications.

The AT89S51 provides the following standard features: 4K bytes of Flash, 128 bytes of RAM, 32 I/O lines, Watchdog timer, two data pointers, two 16-bit timer/counters, a five-vector two-level interrupt architecture, a full duplex serial port, on-chip oscillator, and clock circuitry. In addition, the AT89S51 is designed with static logic for operation down to zero frequency and supports two software selectable power saving modes. The Idle Mode stops the CPU while allowing the RAM, timer/counters, serial port, and interrupt system to continue functioning. The Power-down mode saves the RAM contents but freezes the oscillator, disabling all other chip functions until the next external interrupt or hardware reset.

2487B–MICRO–12/03

找PDF 维库一下 pdf.dzsc.com

Pin Configurations

PDIP

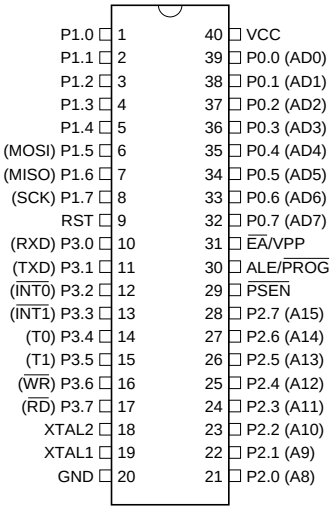

PLCC

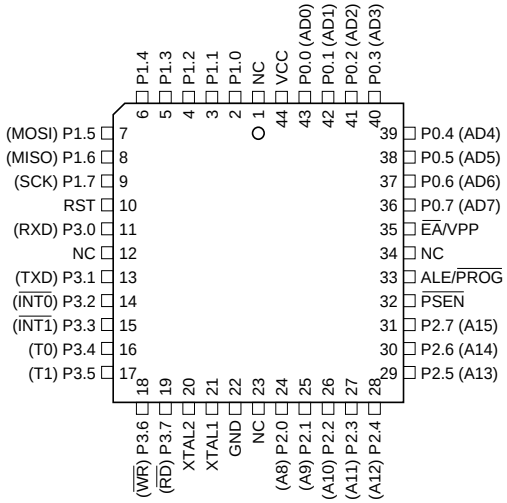

TQFP

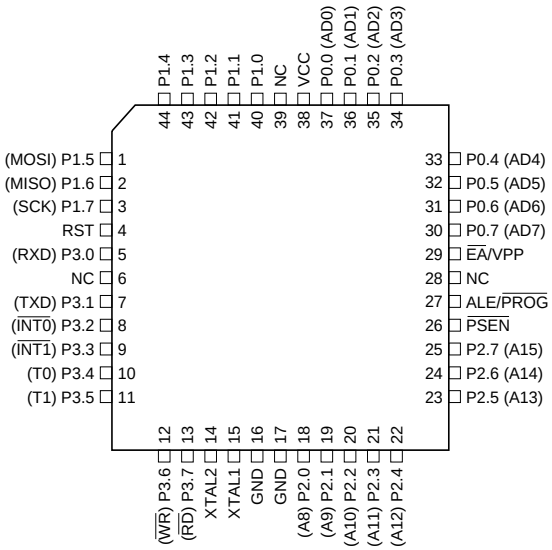

PDIP

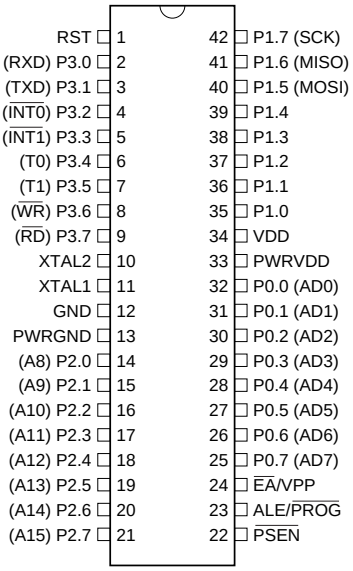

Block Diagram

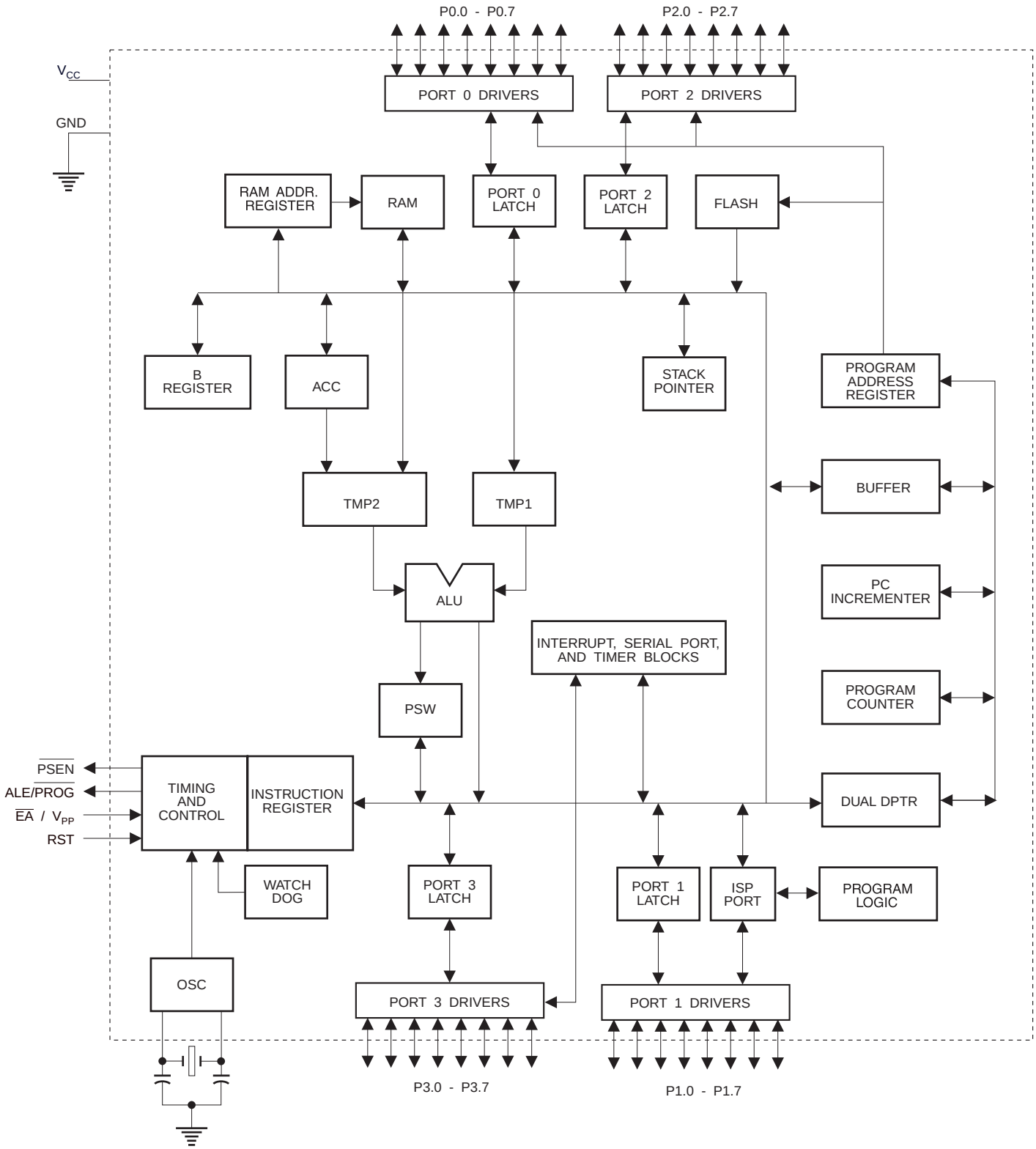

Pin Description

VCC

Supply voltage (all packages except 42-PDIP).

GND

Ground (all packages except 42-PDIP; for 42-PDIP GND connects only the logic core and the embedded program memory).

VDD

Supply voltage for the 42-PDIP which connects only the logic core and the embedded program memory.

PWRVDD

Supply voltage for the 42-PDIP which connects only the I/O Pad Drivers. The application board **MUST** connect both VDD and PWRVDD to the board supply voltage.

PWRGND

Ground for the 42-PDIP which connects only the I/O Pad Drivers. PWRGND and GND are weakly connected through the common silicon substrate, but not through any metal link. The application board **MUST** connect both GND and PWRGND to the board ground.

Port 0

Port 0 is an 8-bit open drain bi-directional I/O port. As an output port, each pin can sink eight TTL inputs. When 1s are written to port 0 pins, the pins can be used as high-impedance inputs.

Port 0 can also be configured to be the multiplexed low-order address/data bus during accesses to external program and data memory. In this mode, P0 has internal pull-ups.

Port 0 also receives the code bytes during Flash programming and outputs the code bytes during program verification. **External pull-ups are required during program verification**.

Port 1

Port 1 is an 8-bit bi-directional I/O port with internal pull-ups. The Port 1 output buffers can sink/source four TTL inputs. When 1s are written to Port 1 pins, they are pulled high by the internal pull-ups and can be used as inputs. As inputs, Port 1 pins that are externally being pulled low will source current (I_{IL}) because of the internal pull-ups.

Port 1 also receives the low-order address bytes during Flash programming and verification.

Port Pin	Alternate Functions
P1.5	MOSI (used for In-System Programming)
P1.6	MISO (used for In-System Programming)
P1.7	SCK (used for In-System Programming)

Port 2

Port 2 is an 8-bit bi-directional I/O port with internal pull-ups. The Port 2 output buffers can sink/source four TTL inputs. When 1s are written to Port 2 pins, they are pulled high by the internal pull-ups and can be used as inputs. As inputs, Port 2 pins that are externally being pulled low will source current (I_{IL}) because of the internal pull-ups.

Port 2 emits the high-order address byte during fetches from external program memory and during accesses to external data memory that use 16-bit addresses (MOVX @ DPTR). In this application, Port 2 uses strong internal pull-ups when emitting 1s. During accesses to external data memory that use 8-bit addresses (MOVX @ RI), Port 2 emits the contents of the P2 Special Function Register.

Port 2 also receives the high-order address bits and some control signals during Flash programming and verification.

Port 3

Port 3 is an 8-bit bi-directional I/O port with internal pull-ups. The Port 3 output buffers can sink/source four TTL inputs. When 1s are written to Port 3 pins, they are pulled high by the internal pull-ups and can be used as inputs. As inputs, Port 3 pins that are externally being pulled low will source current (I_{IL}) because of the pull-ups.

Port 3 receives some control signals for Flash programming and verification.

Port 3 also serves the functions of various special features of the AT89S51, as shown in the following table.

Port Pin	Alternate Functions
P3.0	RXD (serial input port)
P3.1	TXD (serial output port)
P3.2	$\overline{\text{INT0}}$ (external interrupt 0)
P3.3	$\overline{\text{INT1}}$ (external interrupt 1)
P3.4	T0 (timer 0 external input)
P3.5	T1 (timer 1 external input)
P3.6	$\overline{\text{WR}}$ (external data memory write strobe)
P3.7	$\overline{\text{RD}}$ (external data memory read strobe)

RST

Reset input. A high on this pin for two machine cycles while the oscillator is running resets the device. This pin drives High for 98 oscillator periods after the Watchdog times out. The DISRTO bit in SFR AUXR (address 8EH) can be used to disable this feature. In the default state of bit DISRTO, the RESET HIGH out feature is enabled.

ALE/$\overline{\text{PROG}}$

Address Latch Enable (ALE) is an output pulse for latching the low byte of the address during accesses to external memory. This pin is also the program pulse input ($\overline{\text{PROG}}$) during Flash programming.

In normal operation, ALE is emitted at a constant rate of 1/6 the oscillator frequency and may be used for external timing or clocking purposes. Note, however, that one ALE pulse is skipped during each access to external data memory.

If desired, ALE operation can be disabled by setting bit 0 of SFR location 8EH. With the bit set, ALE is active only during a MOVX or MOVC instruction. Otherwise, the pin is weakly pulled high. Setting the ALE-disable bit has no effect if the microcontroller is in external execution mode.

$\overline{\text{PSEN}}$

Program Store Enable ($\overline{\text{PSEN}}$) is the read strobe to external program memory.

When the AT89S51 is executing code from external program memory, $\overline{\text{PSEN}}$ is activated twice each machine cycle, except that two $\overline{\text{PSEN}}$ activations are skipped during each access to external data memory.

$\overline{\text{EA}}$/VPP

External Access Enable. $\overline{\text{EA}}$ must be strapped to GND in order to enable the device to fetch code from external program memory locations starting at 0000H up to FFFFH. Note, however, that if lock bit 1 is programmed, $\overline{\text{EA}}$ will be internally latched on reset.

$\overline{\text{EA}}$ should be strapped to V_{CC} for internal program executions.

This pin also receives the 12-volt programming enable voltage (V_{PP}) during Flash programming.

XTAL1

Input to the inverting oscillator amplifier and input to the internal clock operating circuit.

XTAL2

Output from the inverting oscillator amplifier

Special Function Registers

A map of the on-chip memory area called the Special Function Register (SFR) space is shown in Table 1.

Note that not all of the addresses are occupied, and unoccupied addresses may not be implemented on the chip. Read accesses to these addresses will in general return random data, and write accesses will have an indeterminate effect.

Table 1. AT89S51 SFR Map and Reset Values

0F8H									0FFH
0F0H	B 00000000								0F7H
0E8H									0EFH
0E0H	ACC 00000000								0E7H
0D8H									0DFH
0D0H	PSW 00000000								0D7H
0C8H									0CFH
0C0H									0C7H
0B8H	IP XX000000								0BFH
0B0H	P3 11111111								0B7H
0A8H	IE 0X000000								0AFH
0A0H	P2 11111111		AUXR1 XXXXXXX0				WDTRST XXXXXXXX		0A7H
98H	SCON 00000000	SBUF XXXXXXXX							9FH
90H	P1 11111111								97H
88H	TCON 00000000	TMOD 00000000	TL0 00000000	TL1 00000000	TH0 00000000	TH1 00000000	AUXR XXX00XX0		8FH
80H	P0 11111111	SP 00000111	DP0L 00000000	DP0H 00000000	DP1L 00000000	DP1H 00000000		PCON 0XXX0000	87H

User software should not write 1s to these unlisted locations, since they may be used in future products to invoke new features. In that case, the reset or inactive values of the new bits will always be 0.

Interrupt Registers: The individual interrupt enable bits are in the IE register. Two priorities can be set for each of the five interrupt sources in the IP register.

Table 2. AUXR: Auxiliary Register

AUXR Address = 8EH Reset Value = XXX00XX0B

Not Bit Addressable

	–	–	–	WDIDLE	DISRTO	–	–	DISALE
Bit	7	6	5	4	3	2	1	0

– Reserved for future expansion

DISALE Disable/Enable ALE

DISALE
Operating Mode

0 ALE is emitted at a constant rate of 1/6 the oscillator frequency

1 ALE is active only during a MOVX or MOVC instruction

DISRTO Disable/Enable Reset-out

DISRTO

0 Reset pin is driven High after WDT times out

1 Reset pin is input only

WDIDLE Disable/Enable WDT in IDLE mode

WDIDLE

0 WDT continues to count in IDLE mode

1 WDT halts counting in IDLE mode

Dual Data Pointer Registers: To facilitate accessing both internal and external data memory, two banks of 16-bit Data Pointer Registers are provided: DP0 at SFR address locations 82H-83H and DP1 at 84H-85H. Bit DPS = 0 in SFR AUXR1 selects DP0 and DPS = 1 selects DP1. The user should **ALWAYS** initialize the DPS bit to the appropriate value before accessing the respective Data Pointer Register.

Power Off Flag: The Power Off Flag (POF) is located at bit 4 (PCON.4) in the PCON SFR. POF is set to “1” during power up. It can be set and rest under software control and is not affected by reset.

Table 3. AUXR1: Auxiliary Register 1

AUXR1 Address = A2H Reset Value = XXXXXXX0B

Not Bit Addressable

	–	–	–	–	–	–	–	DPS
Bit	7	6	5	4	3	2	1	0

– Reserved for future expansion

DPS Data Pointer Register Select

DPS	
0	Selects DPTR Registers DP0L, DP0H
1	Selects DPTR Registers DP1L, DP1H

Memory Organization

MCS-51 devices have a separate address space for Program and Data Memory. Up to 64K bytes each of external Program and Data Memory can be addressed.

Program Memory

If the $\overline{EA}$ pin is connected to GND, all program fetches are directed to external memory.

On the AT89S51, if $\overline{EA}$ is connected to V_{CC}, program fetches to addresses 0000H through FFFH are directed to internal memory and fetches to addresses 1000H through FFFFH are directed to external memory.

Data Memory

The AT89S51 implements 128 bytes of on-chip RAM. The 128 bytes are accessible via direct and indirect addressing modes. Stack operations are examples of indirect addressing, so the 128 bytes of data RAM are available as stack space.

Watchdog Timer (One-time Enabled with Reset-out)

The WDT is intended as a recovery method in situations where the CPU may be subjected to software upsets. The WDT consists of a 14-bit counter and the Watchdog Timer Reset (WDTRST) SFR. The WDT is defaulted to disable from exiting reset. To enable the WDT, a user must write 01EH and 0E1H in sequence to the WDTRST register (SFR location 0A6H). When the WDT is enabled, it will increment every machine cycle while the oscillator is running. The WDT timeout period is dependent on the external clock frequency. There is no way to disable the WDT except through reset (either hardware reset or WDT overflow reset). When WDT overflows, it will drive an output RESET HIGH pulse at the RST pin.

Using the WDT

To enable the WDT, a user must write 01EH and 0E1H in sequence to the WDTRST register (SFR location 0A6H). When the WDT is enabled, the user needs to service it by writing 01EH and 0E1H to WDTRST to avoid a WDT overflow. The 14-bit counter overflows when it reaches 16383 (3FFFH), and this will reset the device. When the WDT is enabled, it will increment every machine cycle while the oscillator is running. This means the user must reset the WDT at least every 16383 machine cycles. To reset the WDT the user must write 01EH and 0E1H to WDTRST. WDTRST is a write-only register. The WDT counter cannot be read or written. When WDT overflows, it will generate an output RESET pulse at the RST pin. The RESET pulse duration is 98xTOSC, where TOSC = 1/FOSC. To make the best use of the WDT, it should be serviced in those sections of code that will periodically be executed within the time required to prevent a WDT reset.

WDT During Power-down and Idle

In Power-down mode the oscillator stops, which means the WDT also stops. While in Power-down mode, the user does not need to service the WDT. There are two methods of exiting Power-down mode: by a hardware reset or via a level-activated external interrupt, which is enabled prior to entering Power-down mode. When Power-down is exited with hardware reset, servicing the WDT should occur as it normally does whenever the AT89S51 is reset. Exiting Power-down with an interrupt is significantly different. The interrupt is held low long enough for the oscillator to stabilize. When the interrupt is brought high, the interrupt is serviced. To prevent the WDT from resetting the device while the interrupt pin is held low, the WDT is not started until the interrupt is pulled high. It is suggested that the WDT be reset during the interrupt service for the interrupt used to exit Power-down mode.

To ensure that the WDT does not overflow within a few states of exiting Power-down, it is best to reset the WDT just before entering Power-down mode.

Before going into the IDLE mode, the WDIDLE bit in SFR AUXR is used to determine whether the WDT continues to count if enabled. The WDT keeps counting during IDLE (WDIDLE bit = 0) as the default state. To prevent the WDT from resetting the AT89S51 while in IDLE mode, the user should always set up a timer that will periodically exit IDLE, service the WDT, and reenter IDLE mode.

With WDIDLE bit enabled, the WDT will stop to count in IDLE mode and resumes the count upon exit from IDLE.

UART

The UART in the AT89S51 operates the same way as the UART in the AT89C51. For further information on the UART operation, refer to the Atmel Web site (http://www.atmel.com). From the home page, select “Products”, then “Microcontrollers”, then “8051-Architecture”, then “Documentation”, and “Other Documents”. Open the Adobe® Acrobat® file “AT89 Series Hardware Description”.

Timer 0 and 1

Timer 0 and Timer 1 in the AT89S51 operate the same way as Timer 0 and Timer 1 in the AT89C51. For further information on the timers’ operation, refer to the Atmel Web site (http://www.atmel.com). From the home page, select “Products”, then “Microcontrollers”, then “8051-Architecture”, then “Documentation”, and “Other Documents”. Open the Adobe Acrobat file “AT89 Series Hardware Description”.

Interrupts

The AT89S51 has a total of five interrupt vectors: two external interrupts ($\overline{INT0}$ and $\overline{INT1}$), two timer interrupts (Timers 0 and 1), and the serial port interrupt. These interrupts are all shown in Figure 1.

Each of these interrupt sources can be individually enabled or disabled by setting or clearing a bit in Special Function Register IE. IE also contains a global disable bit, EA, which disables all interrupts at once.

Note that Table 4 shows that bit positions IE.6 and IE.5 are unimplemented. User software should not write 1s to these bit positions, since they may be used in future AT89 products.

The Timer 0 and Timer 1 flags, TF0 and TF1, are set at S5P2 of the cycle in which the timers overflow. The values are then polled by the circuitry in the next cycle.

Table 4. Interrupt Enable (IE) Register

(MSB)							(LSB)
EA	–	–	ES	ET1	EX1	ET0	EX0

Enable Bit = 1 enables the interrupt.

Enable Bit = 0 disables the interrupt.

Symbol	Position	Function
EA	IE.7	Disables all interrupts. If EA = 0, no interrupt is acknowledged. If EA = 1, each interrupt source is individually enabled or disabled by setting or clearing its enable bit.
–	IE.6	Reserved
–	IE.5	Reserved
ES	IE.4	Serial Port interrupt enable bit
ET1	IE.3	Timer 1 interrupt enable bit
EX1	IE.2	External interrupt 1 enable bit
ET0	IE.1	Timer 0 interrupt enable bit
EX0	IE.0	External interrupt 0 enable bit
User software should never write 1s to reserved bits, because they may be used in future AT89 products.		

Figure 1. Interrupt Sources

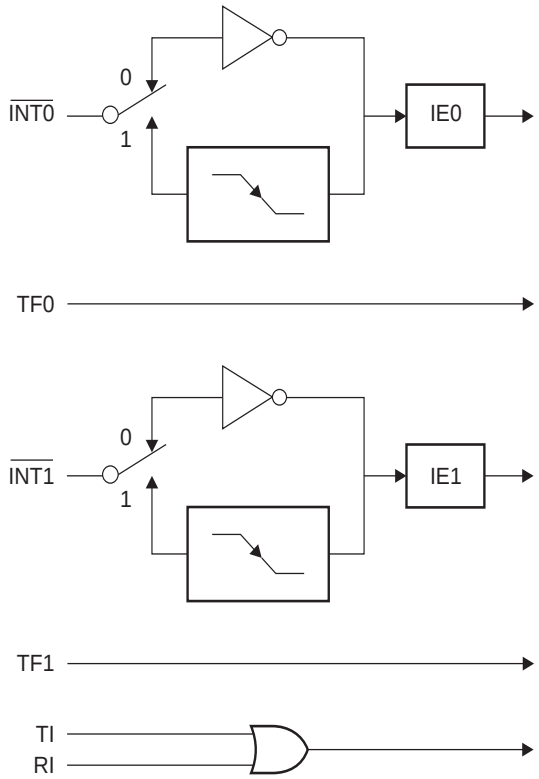

Oscillator Characteristics

XTAL1 and XTAL2 are the input and output, respectively, of an inverting amplifier that can be configured for use as an on-chip oscillator, as shown in Figure 2. Either a quartz crystal or ceramic resonator may be used. To drive the device from an external clock source, XTAL2 should be left unconnected while XTAL1 is driven, as shown in Figure 3. There are no requirements on the duty cycle of the external clock signal, since the input to the internal clocking circuitry is through a divide-by-two flip-flop, but minimum and maximum voltage high and low time specifications must be observed.

Figure 2. Oscillator Connections

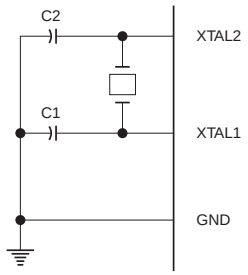

Note: C1, C2 = 30 pF ±10 pF for Crystals
= 40 pF ±10 pF for Ceramic Resonators

Figure 3. External Clock Drive Configuration

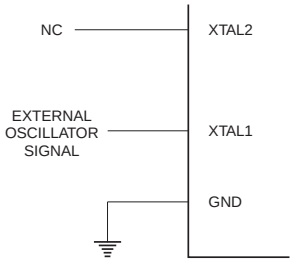

Idle Mode

In idle mode, the CPU puts itself to sleep while all the on-chip peripherals remain active. The mode is invoked by software. The content of the on-chip RAM and all the special function registers remain unchanged during this mode. The idle mode can be terminated by any enabled interrupt or by a hardware reset.

Note that when idle mode is terminated by a hardware reset, the device normally resumes program execution from where it left off, up to two machine cycles before the internal reset algorithm takes control. On-chip hardware inhibits access to internal RAM in this event, but access to the port pins is not inhibited. To eliminate the possibility of an unexpected write to a port pin when idle mode is terminated by a reset, the instruction following the one that invokes idle mode should not write to a port pin or to external memory.

Power-down Mode

In the Power-down mode, the oscillator is stopped, and the instruction that invokes Power-down is the last instruction executed. The on-chip RAM and Special Function Registers retain their values until the Power-down mode is terminated. Exit from Power-down mode can be initiated either by a hardware reset or by activation of an enabled external interrupt ($\overline{INT0}$ or $\overline{INT1}$). Reset redefines the SFRs but does not change the on-chip RAM. The reset should not be activated before V_{CC} is restored to its normal operating level and must be held active long enough to allow the oscillator to restart and stabilize.

Table 5. Status of External Pins During Idle and Power-down Modes

Mode	Program Memory	ALE	$\overline{PSEN}$	PORT0	PORT1	PORT2	PORT3
Idle	Internal	1	1	Data	Data	Data	Data
Idle	External	1	1	Float	Data	Address	Data
Power-down	Internal	0	0	Data	Data	Data	Data
Power-down	External	0	0	Float	Data	Data	Data

Program Memory Lock Bits

The AT89S51 has three lock bits that can be left unprogrammed (U) or can be programmed (P) to obtain the additional features listed in the following table.

Table 6. Lock Bit Protection Modes

Program Lock Bits				
	LB1	LB2	LB3	Protection Type
1	U	U	U	No program lock features
2	P	U	U	MOVC instructions executed from external program memory are disabled from fetching code bytes from internal memory, $\overline{EA}$ is sampled and latched on reset, and further programming of the Flash memory is disabled
3	P	P	U	Same as mode 2, but verify is also disabled
4	P	P	P	Same as mode 3, but external execution is also disabled

When lock bit 1 is programmed, the logic level at the $\overline{EA}$ pin is sampled and latched during reset. If the device is powered up without a reset, the latch initializes to a random value and holds that value until reset is activated. The latched value of $\overline{EA}$ must agree with the current logic level at that pin in order for the device to function properly.

Programming the Flash – Parallel Mode

The AT89S51 is shipped with the on-chip Flash memory array ready to be programmed. The programming interface needs a high-voltage (12-volt) program enable signal and is compatible with conventional third-party Flash or EPROM programmers.

The AT89S51 code memory array is programmed byte-by-byte.

Programming Algorithm: Before programming the AT89S51, the address, data, and control signals should be set up according to the Flash Programming Modes table (Table 7) and Figures 4 and 5. To program the AT89S51, take the following steps:

1. Input the desired memory location on the address lines.
2. Input the appropriate data byte on the data lines.
3. Activate the correct combination of control signals.
4. Raise $\overline{EA}/V_{PP}$ to 12V.
5. Pulse ALE/$\overline{PROG}$ once to program a byte in the Flash array or the lock bits. The byte-write cycle is self-timed and typically takes no more than 50 µs. Repeat steps 1 through 5, changing the address and data for the entire array or until the end of the object file is reached.

$\overline{Data}$ Polling: The AT89S51 features $\overline{Data}$ Polling to indicate the end of a byte write cycle. During a write cycle, an attempted read of the last byte written will result in the complement of the written data on P0.7. Once the write cycle has been completed, true data is valid on all outputs, and the next cycle may begin. $\overline{Data}$ Polling may begin any time after a write cycle has been initiated.

Ready/$\overline{\text{Busy}}$: The progress of byte programming can also be monitored by the RDY/$\overline{\text{BSY}}$ output signal. P3.0 is pulled low after ALE goes high during programming to indicate $\overline{\text{BUSY}}$. P3.0 is pulled high again when programming is done to indicate READY.

Program Verify: If lock bits LB1 and LB2 have not been programmed, the programmed code data can be read back via the address and data lines for verification. **The status of the individual lock bits can be verified directly by reading them back.**

Reading the Signature Bytes: The signature bytes are read by the same procedure as a normal verification of locations 000H, 100H, and 200H, except that P3.6 and P3.7 must be pulled to a logic low. The values returned are as follows.

(000H) = 1EH indicates manufactured by Atmel
(100H) = 51H indicates AT89S51
(200H) = 06H

Chip Erase: In the parallel programming mode, a chip erase operation is initiated by using the proper combination of control signals and by pulsing ALE/$\overline{\text{PROG}}$ low for a duration of 200 ns - 500 ns.

In the serial programming mode, a chip erase operation is initiated by issuing the Chip Erase instruction. In this mode, chip erase is self-timed and takes about 500 ms.

During chip erase, a serial read from any address location will return 00H at the data output.

Programming the Flash – Serial Mode

The Code memory array can be programmed using the serial ISP interface while RST is pulled to V_{CC}. The serial interface consists of pins SCK, MOSI (input) and MISO (output). After RST is set high, the Programming Enable instruction needs to be executed first before other operations can be executed. Before a reprogramming sequence can occur, a Chip Erase operation is required.

The Chip Erase operation turns the content of every memory location in the Code array into FFH.

Either an external system clock can be supplied at pin XTAL1 or a crystal needs to be connected across pins XTAL1 and XTAL2. The maximum serial clock (SCK) frequency should be less than 1/16 of the crystal frequency. With a 33 MHz oscillator clock, the maximum SCK frequency is 2 MHz.

Serial Programming Algorithm

To program and verify the AT89S51 in the serial programming mode, the following sequence is recommended:

1. Power-up sequence:

   Apply power between VCC and GND pins.

   Set RST pin to “H”.

   If a crystal is not connected across pins XTAL1 and XTAL2, apply a 3 MHz to 33 MHz clock to XTAL1 pin and wait for at least 10 milliseconds.
2. Enable serial programming by sending the Programming Enable serial instruction to pin MOSI/P1.5. The frequency of the shift clock supplied at pin SCK/P1.7 needs to be less than the CPU clock at XTAL1 divided by 16.
3. The Code array is programmed one byte at a time in either the Byte or Page mode. The write cycle is self-timed and typically takes less than 0.5 ms at 5V.
4. Any memory location can be verified by using the Read instruction that returns the content at the selected address at serial output MISO/P1.6.
5. At the end of a programming session, RST can be set low to commence normal device operation.

Power-off sequence (if needed):

Set XTAL1 to “L” (if a crystal is not used).

Set RST to “L”.

Turn V_{CC} power off.

$\overline{\text{Data}}$ Polling: The $\overline{\text{Data}}$ Polling feature is also available in the serial mode. In this mode, during a write cycle an attempted read of the last byte written will result in the complement of the MSB of the serial output byte on MISO.

Serial Programming Instruction Set

The Instruction Set for Serial Programming follows a 4-byte protocol and is shown in Table 8.

Programming Interface – Parallel Mode

Every code byte in the Flash array can be programmed by using the appropriate combination of control signals. The write operation cycle is self-timed and once initiated, will automatically time itself to completion.

Most major worldwide programming vendors offer worldwide support for the Atmel AT89 microcontroller series. Please contact your local programming vendor for the appropriate software revision.

Table 7. Flash Programming Modes

Mode	V_{CC}	RST	$\overline{\text{PSEN}}$	ALE/ $\overline{\text{PROG}}$	$\overline{\text{EA}}$/ V_{PP}	P2.6	P2.7	P3.3	P3.6	P3.7	P0.7-0 Data	P2.3-0 Address	P1.7-0 Address
Write Code Data	5V	H	L	(2)	12V	L	H	H	H	H	D_{IN}	A11-8	A7-0
Read Code Data	5V	H	L	H	H	L	L	L	H	H	D_{OUT}	A11-8	A7-0
Write Lock Bit 1	5V	H	L	(3)	12V	H	H	H	H	H	X	X	X
Write Lock Bit 2	5V	H	L	(3)	12V	H	H	H	L	L	X	X	X
Write Lock Bit 3	5V	H	L	(3)	12V	H	L	H	H	L	X	X	X
Read Lock Bits 1, 2, 3	5V	H	L	H	H	H	H	L	H	L	P0.2, P0.3, P0.4	X	X
Chip Erase	5V	H	L	(1)	12V	H	L	H	L	L	X	X	X
Read Atmel ID	5V	H	L	H	H	L	L	L	L	L	1EH	0000	00H
Read Device ID	5V	H	L	H	H	L	L	L	L	L	51H	0001	00H
Read Device ID	5V	H	L	H	H	L	L	L	L	L	06H	0010	00H

Notes:
1. Each $\overline{\text{PROG}}$ pulse is 200 ns - 500 ns for Chip Erase.
2. Each $\overline{\text{PROG}}$ pulse is 200 ns - 500 ns for Write Code Data.
3. Each $\overline{\text{PROG}}$ pulse is 200 ns - 500 ns for Write Lock Bits.
4. RDY/$\overline{\text{BSY}}$ signal is output on P3.0 during programming.
5. X = don’t care.

Figure 4. Programming the Flash Memory (Parallel Mode)

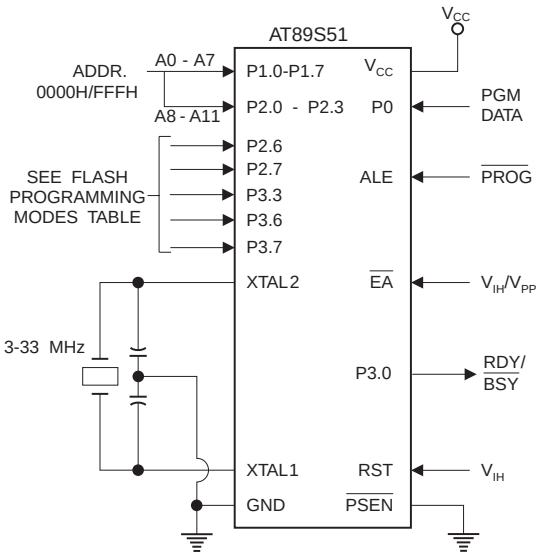

Figure 5. Verifying the Flash Memory (Parallel Mode)

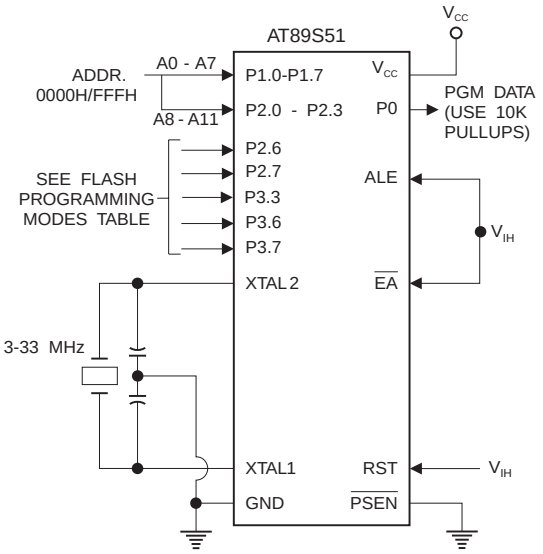

Flash Programming and Verification Characteristics (Parallel Mode)

T_A = 20°C to 30°C, V_{CC} = 4.5 to 5.5V

Symbol	Parameter	Min	Max	Units
V_{PP}	Programming Supply Voltage	11.5	12.5	V
I_{PP}	Programming Supply Current		10	mA
I_{CC}	V_{CC} Supply Current		30	mA
$1/t_{CLCL}$	Oscillator Frequency	3	33	MHz
t_{AVGL}	Address Setup to $\overline{PROG}$ Low	$48t_{CLCL}$		
t_{GHAX}	Address Hold After $\overline{PROG}$	$48t_{CLCL}$		
t_{DVGL}	Data Setup to $\overline{PROG}$ Low	$48t_{CLCL}$		
t_{GHDX}	Data Hold After $\overline{PROG}$	$48t_{CLCL}$		
t_{EHSH}	P2.7 ($\overline{ENABLE}$) High to V_{PP}	$48t_{CLCL}$		
t_{SHGL}	V_{PP} Setup to $\overline{PROG}$ Low	10		µs
t_{GHSL}	V_{PP} Hold After $\overline{PROG}$	10		µs
t_{GLGH}	$\overline{PROG}$ Width	0.2	1	µs
t_{AVQV}	Address to Data Valid		$48t_{CLCL}$	
t_{ELQV}	$\overline{ENABLE}$ Low to Data Valid		$48t_{CLCL}$	
t_{EHQZ}	Data Float After $\overline{ENABLE}$	0	$48t_{CLCL}$	
t_{GHBL}	$\overline{PROG}$ High to $\overline{BUSY}$ Low		1.0	µs
t_{WC}	Byte Write Cycle Time		50	µs

Figure 6. Flash Programming and Verification Waveforms – Parallel Mode

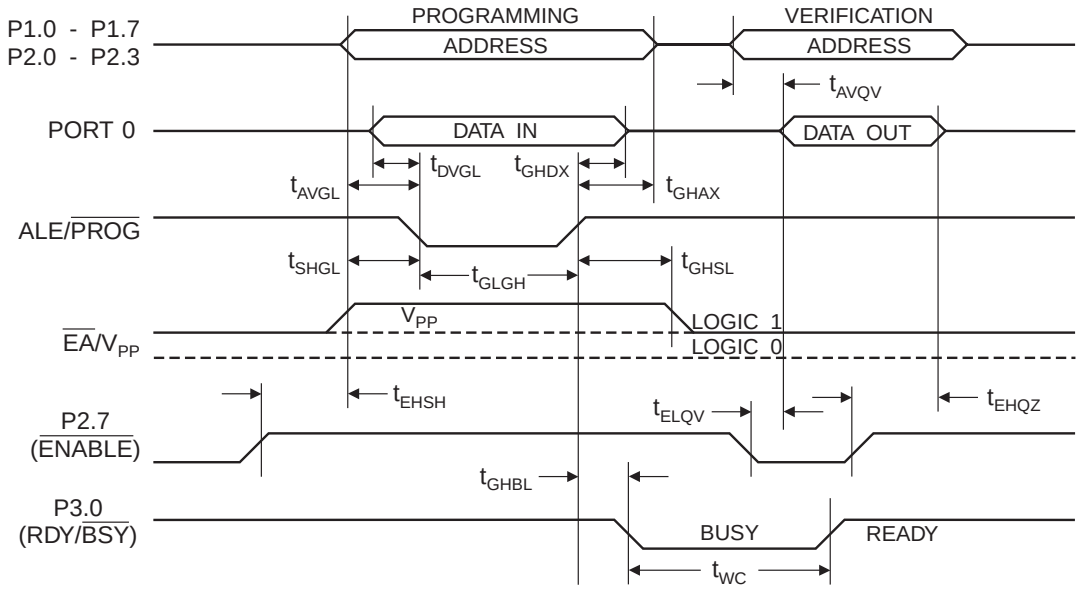

Figure 7. Flash Memory Serial Downloading

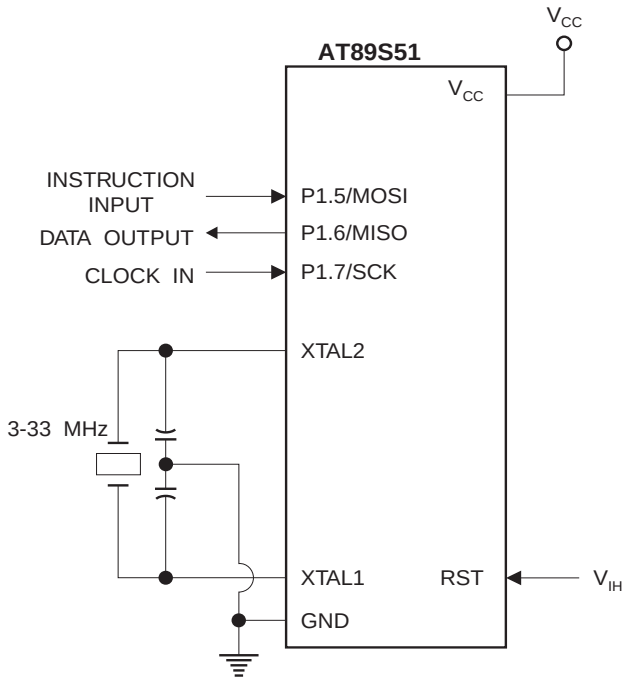

Flash Programming and Verification Waveforms – Serial Mode

Figure 8. Serial Programming Waveforms

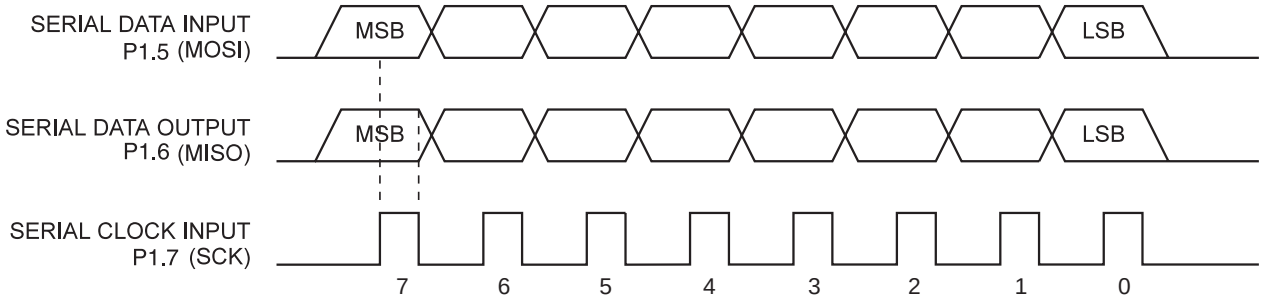

Table 8. Serial Programming Instruction Set

Instruction	Instruction Format Byte 1	Byte 2	Byte 3	Byte 4	Operation
Programming Enable	1010 1100	0101 0011	xxxx xxxx	xxxx xxxx 0110 1001 (Output on MISO)	Enable Serial Programming while RST is high
Chip Erase	1010 1100	100x xxxx	xxxx xxxx	xxxx xxxx	Chip Erase Flash memory array
Read Program Memory (Byte Mode)	0010 0000	xxxx A11 A10 A9 A8	A7 A6 A5 A4 A3 A2 A1 A0	D7 D6 D5 D4 D3 D2 D1 D0	Read data from Program memory in the byte mode
Write Program Memory (Byte Mode)	0100 0000	xxxx A11 A10 A9 A8	A7 A6 A5 A4 A3 A2 A1 A0	D7 D6 D5 D4 D3 D2 D1 D0	Write data to Program memory in the byte mode
Write Lock Bits(1)	1010 1100	1110 00 B1 B2	xxxx xxxx	xxxx xxxx	Write Lock bits. See Note (1).
Read Lock Bits	0010 0100	xxxx xxxx	xxxx xxxx	xxx LB3 LB2 LB1 xx	Read back current status of the lock bits (a programmed lock bit reads back as a “1”)
Read Signature Bytes	0010 1000	xxxx A11 A10 A9 A8	A7 xxx xxx0	Signature Byte	Read Signature Byte
Read Program Memory (Page Mode)	0011 0000	xxxx A11 A10 A9 A8	Byte 0	Byte 1... Byte 255	Read data from Program memory in the Page Mode (256 bytes)
Write Program Memory (Page Mode)	0101 0000	xxxx A11 A10 A9 A8	Byte 0	Byte 1... Byte 255	Write data to Program memory in the Page Mode (256 bytes)

Note: 1. B1 = 0, B2 = 0 → Mode 1, no lock protection
B1 = 0, B2 = 1 → Mode 2, lock bit 1 activated
B1 = 1, B2 = 0 → Mode 3, lock bit 2 activated
B1 = 1, B2 = 1 → Mode 4, lock bit 3 activated

} Each of the lock bit modes need to be activated sequentially before Mode 4 can be executed.

After Reset signal is high, SCK should be low for at least 64 system clocks before it goes high to clock in the enable data bytes. No pulsing of Reset signal is necessary. SCK should be no faster than 1/16 of the system clock at XTAL1.

For Page Read/Write, the data always starts from byte 0 to 255. After the command byte and upper address byte are latched, each byte thereafter is treated as data until all 256 bytes are shifted in/out. Then the next instruction will be ready to be decoded.

Serial Programming Characteristics

Figure 9. Serial Programming Timing

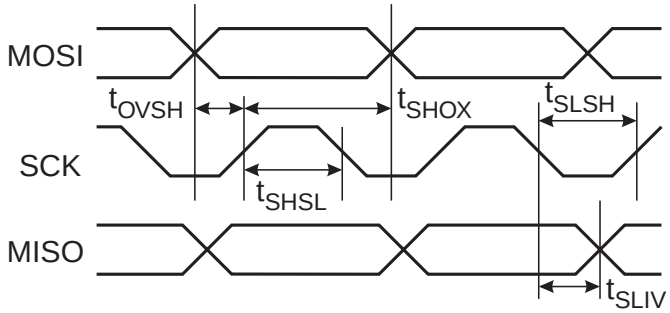

Table 9. Serial Programming Characteristics, T_A = -40° C to 85° C, V_{CC} = 4.0 - 5.5V (Unless Otherwise Noted)

Symbol	Parameter	Min	Typ	Max	Units
$1/t_{CLCL}$	Oscillator Frequency	3		33	MHz
t_{CLCL}	Oscillator Period	30			ns
t_{SHSL}	SCK Pulse Width High	8 t_{CLCL}			ns
t_{SLSH}	SCK Pulse Width Low	8 t_{CLCL}			ns
t_{OVSH}	MOSI Setup to SCK High	t_{CLCL}			ns
t_{SHOX}	MOSI Hold after SCK High	2 t_{CLCL}			ns
t_{SLIV}	SCK Low to MISO Valid	10	16	32	ns
t_{ERASE}	Chip Erase Instruction Cycle Time			500	ms
t_{SWC}	Serial Byte Write Cycle Time			64 t_{CLCL} + 400	µs

Absolute Maximum Ratings*

Operating Temperature ..... -55°C to +125°C

Storage Temperature ..... -65°C to +150°C

Voltage on Any Pin
with Respect to Ground .....-1.0V to +7.0V

Maximum Operating Voltage 6.6V

DC Output Current..... 15.0 mA

*NOTICE: Stresses beyond those listed under "Absolute Maximum Ratings" may cause permanent damage to the device. This is a stress rating only and functional operation of the device at these or any other conditions beyond those indicated in the operational sections of this specification is not implied. Exposure to absolute maximum rating conditions for extended periods may affect device reliability.

DC Characteristics

The values shown in this table are valid for T_A = -40°C to 85°C and V_{CC} = 4.0V to 5.5V, unless otherwise noted.

Symbol	Parameter	Condition	Min	Max	Units
V_{IL}	Input Low Voltage	(Except $\overline{EA}$)	-0.5	0.2 V_{CC}-0.1	V
V_{IL1}	Input Low Voltage ($\overline{EA}$)		-0.5	0.2 V_{CC}-0.3	V
V_{IH}	Input High Voltage	(Except XTAL1, RST)	0.2 V_{CC}+0.9	V_{CC}+0.5	V
V_{IH1}	Input High Voltage	(XTAL1, RST)	0.7 V_{CC}	V_{CC}+0.5	V
V_{OL}	Output Low Voltage(1) (Ports 1,2,3)	I_{OL} = 1.6 mA		0.45	V
V_{OL1}	Output Low Voltage(1) (Port 0, ALE, $\overline{PSEN}$)	I_{OL} = 3.2 mA		0.45	V
V_{OH}	Output High Voltage (Ports 1,2,3, ALE, $\overline{PSEN}$)	I_{OH} = -60 µA, V_{CC} = 5V ±10%	2.4		V
		I_{OH} = -25 µA	0.75 V_{CC}		V
		I_{OH} = -10 µA	0.9 V_{CC}		V
V_{OH1}	Output High Voltage (Port 0 in External Bus Mode)	I_{OH} = -800 µA, V_{CC} = 5V ±10%	2.4		V
		I_{OH} = -300 µA	0.75 V_{CC}		V
		I_{OH} = -80 µA	0.9 V_{CC}		V
I_{IL}	Logical 0 Input Current (Ports 1,2,3)	V_{IN} = 0.45V		-50	µA
I_{TL}	Logical 1 to 0 Transition Current (Ports 1,2,3)	V_{IN} = 2V, V_{CC} = 5V ±10%		-650	µA
I_{LI}	Input Leakage Current (Port 0, $\overline{EA}$)	0.45 < V_{IN} < V_{CC}		±10	µA
RRST	Reset Pulldown Resistor		50	300	KΩ
C_{IO}	Pin Capacitance	Test Freq. = 1 MHz, T_A = 25°C		10	pF
I_{CC}	Power Supply Current	Active Mode, 12 MHz		25	mA
		Idle Mode, 12 MHz		6.5	mA
	Power-down Mode(2)	V_{CC} = 5.5V		50	µA

Notes: 1. Under steady state (non-transient) conditions, I_{OL} must be externally limited as follows:
Maximum I_{OL} per port pin: 10 mA
Maximum I_{OL} per 8-bit port:
Port 0: 26 mA Ports 1, 2, 3: 15 mA
Maximum total I_{OL} for all output pins: 71 mA
If I_{OL} exceeds the test condition, V_{OL} may exceed the related specification. Pins are not guaranteed to sink current greater than the listed test conditions.
2. Minimum V_{CC} for Power-down is 2V.

AC Characteristics

Under operating conditions, load capacitance for Port 0, ALE/$\overline{PROG}$, and $\overline{PSEN}$ = 100 pF; load capacitance for all other outputs = 80 pF.

External Program and Data Memory Characteristics

Symbol	Parameter	12 MHz Oscillator		Variable Oscillator		Units
		Min	Max	Min	Max	
$1/t_{CLCL}$	Oscillator Frequency			0	33	MHz
t_{LHLL}	ALE Pulse Width	127		$2t_{CLCL}$-40		ns
t_{AVLL}	Address Valid to ALE Low	43		t_{CLCL}-25		ns
t_{LLAX}	Address Hold After ALE Low	48		t_{CLCL}-25		ns
t_{LLIV}	ALE Low to Valid Instruction In		233		$4t_{CLCL}$-65	ns
t_{LLPL}	ALE Low to $\overline{PSEN}$ Low	43		t_{CLCL}-25		ns
t_{PLPH}	$\overline{PSEN}$ Pulse Width	205		$3t_{CLCL}$-45		ns
t_{PLIV}	$\overline{PSEN}$ Low to Valid Instruction In		145		$3t_{CLCL}$-60	ns
t_{PXIX}	Input Instruction Hold After $\overline{PSEN}$	0		0		ns
t_{PXIZ}	Input Instruction Float After $\overline{PSEN}$		59		t_{CLCL}-25	ns
t_{PXAV}	$\overline{PSEN}$ to Address Valid	75		t_{CLCL}-8		ns
t_{AVIV}	Address to Valid Instruction In		312		$5t_{CLCL}$-80	ns
t_{PLAZ}	$\overline{PSEN}$ Low to Address Float		10		10	ns
t_{RLRH}	$\overline{RD}$ Pulse Width	400		$6t_{CLCL}$-100		ns
t_{WLWH}	$\overline{WR}$ Pulse Width	400		$6t_{CLCL}$-100		ns
t_{RLDV}	$\overline{RD}$ Low to Valid Data In		252		$5t_{CLCL}$-90	ns
t_{RHDX}	Data Hold After $\overline{RD}$	0		0		ns
t_{RHDZ}	Data Float After $\overline{RD}$		97		$2t_{CLCL}$-28	ns
t_{LLDV}	ALE Low to Valid Data In		517		$8t_{CLCL}$-150	ns
t_{AVDV}	Address to Valid Data In		585		$9t_{CLCL}$-165	ns
t_{LLWL}	ALE Low to $\overline{RD}$ or $\overline{WR}$ Low	200	300	$3t_{CLCL}$-50	$3t_{CLCL}$+50	ns
t_{AVWL}	Address to $\overline{RD}$ or $\overline{WR}$ Low	203		$4t_{CLCL}$-75		ns
t_{QVWX}	Data Valid to $\overline{WR}$ Transition	23		t_{CLCL}-30		ns
t_{QVWH}	Data Valid to $\overline{WR}$ High	433		$7t_{CLCL}$-130		ns
t_{WHQX}	Data Hold After $\overline{WR}$	33		t_{CLCL}-25		ns
t_{RLAZ}	$\overline{RD}$ Low to Address Float		0		0	ns
t_{WHLH}	$\overline{RD}$ or $\overline{WR}$ High to ALE High	43	123	t_{CLCL}-25	t_{CLCL}+25	ns

External Program Memory Read Cycle

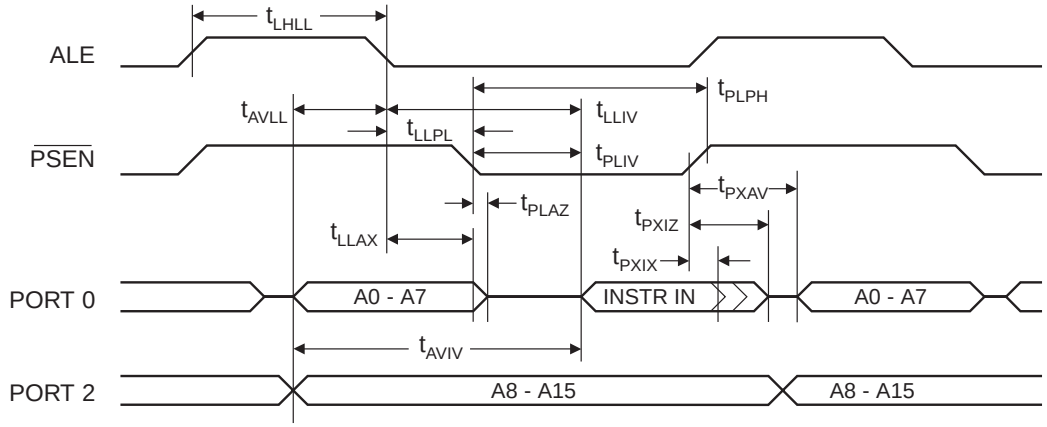

External Data Memory Read Cycle

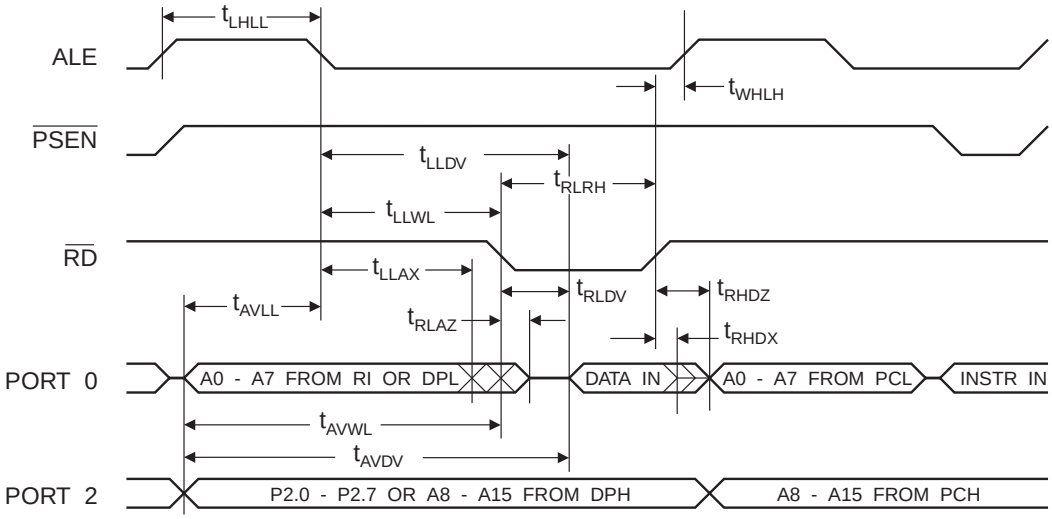

External Data Memory Write Cycle

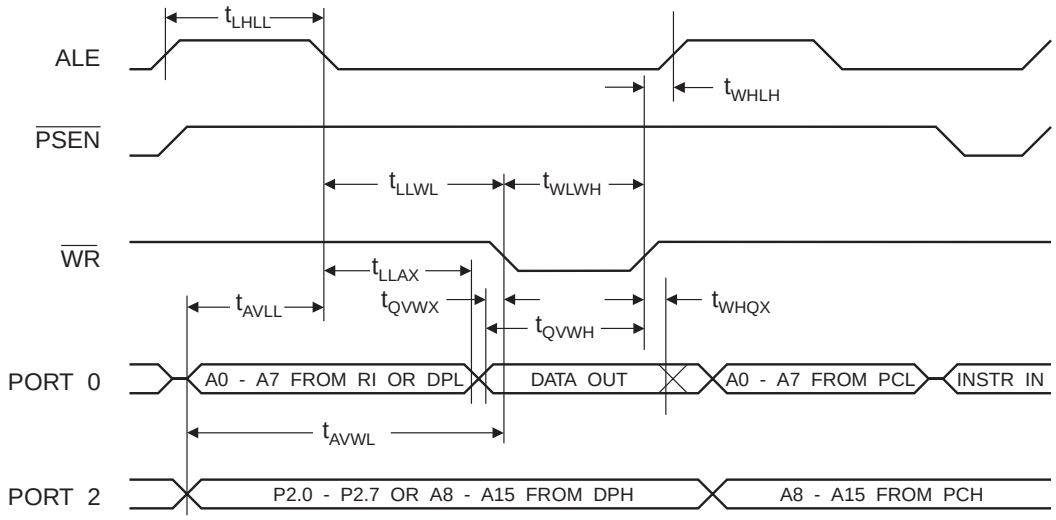

External Clock Drive Waveforms

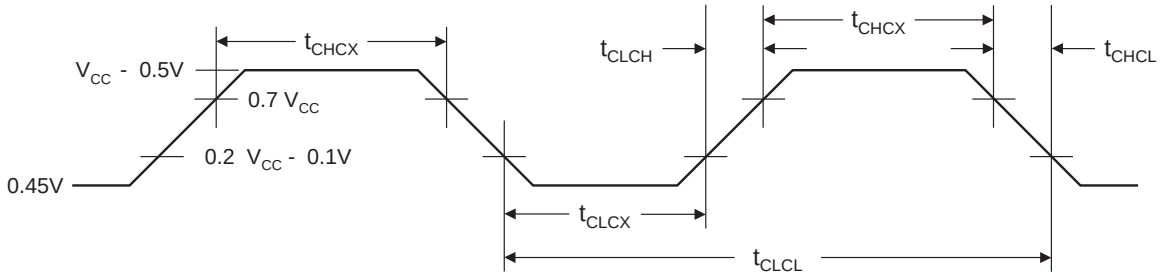

External Clock Drive

Symbol	Parameter	Min	Max	Units
$1/t_{CLCL}$	Oscillator Frequency	0	33	MHz
t_{CLCL}	Clock Period	30		ns
t_{CHCX}	High Time	12		ns
t_{CLCX}	Low Time	12		ns
t_{CLCH}	Rise Time		5	ns
t_{CHCL}	Fall Time		5	ns

Serial Port Timing: Shift Register Mode Test Conditions

The values in this table are valid for V_{CC} = 4.0V to 5.5V and Load Capacitance = 80 pF.

Symbol	Parameter	12 MHz Osc		Variable Oscillator		Units
		Min	Max	Min	Max	
t_{XLXL}	Serial Port Clock Cycle Time	1.0		$12t_{CLCL}$		µs
t_{QVXH}	Output Data Setup to Clock Rising Edge	700		$10t_{CLCL}$-133		ns
t_{XHQX}	Output Data Hold After Clock Rising Edge	50		$2t_{CLCL}$-80		ns
t_{XHDX}	Input Data Hold After Clock Rising Edge	0		0		ns
t_{XHDV}	Clock Rising Edge to Input Data Valid		700		$10t_{CLCL}$-133	ns

Shift Register Mode Timing Waveforms

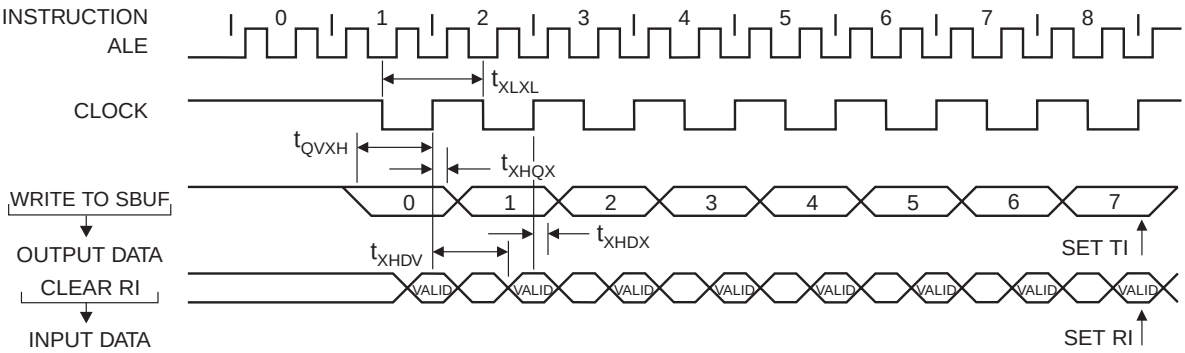

AC Testing Input/Output Waveforms(1)

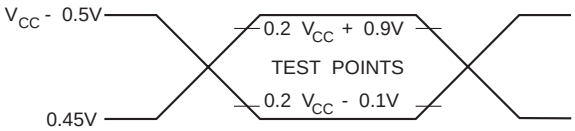

Note: 1. AC Inputs during testing are driven at V_{CC} - 0.5V for a logic 1 and 0.45V for a logic 0. Timing measurements are made at V_{IH} min. for a logic 1 and V_{IL} max. for a logic 0.

Float Waveforms(1)

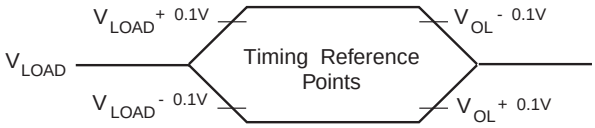

Note: 1. For timing purposes, a port pin is no longer floating when a 100 mV change from load voltage occurs. A port pin begins to float when a 100 mV change from the loaded V_{OH}/V_{OL} level occurs.

Ordering Information

Speed (MHz)	Power Supply	Ordering Code	Package	Operation Range
24	4.0V to 5.5V	AT89S51-24AC AT89S51-24JC AT89S51-24PC AT89S51-24SC	44A 44J 40P6 42PS6	Commercial (0° C to 70° C)
		AT89S51-24AI AT89S51-24JI AT89S51-24PI AT89S51-24SI	44A 44J 40P6 42PS6	Industrial (-40° C to 85° C)
33	4.5V to 5.5V	AT89S51-33AC AT89S51-33JC AT89S51-33PC AT89S51-33SC	44A 44J 40P6 42PS6	Commercial (0° C to 70° C)

Package Type	
44A	44-lead, Thin Plastic Gull Wing Quad Flatpack (TQFP)
44J	44-lead, Plastic J-leaded Chip Carrier (PLCC)
40P6	40-pin, 0.600" Wide, Plastic Dual Inline Package (PDIP)
42PS6	42-pin, 0.600" Wide, Plastic Dual Inline Package (PDIP)

Packaging Information

44A – TQFP

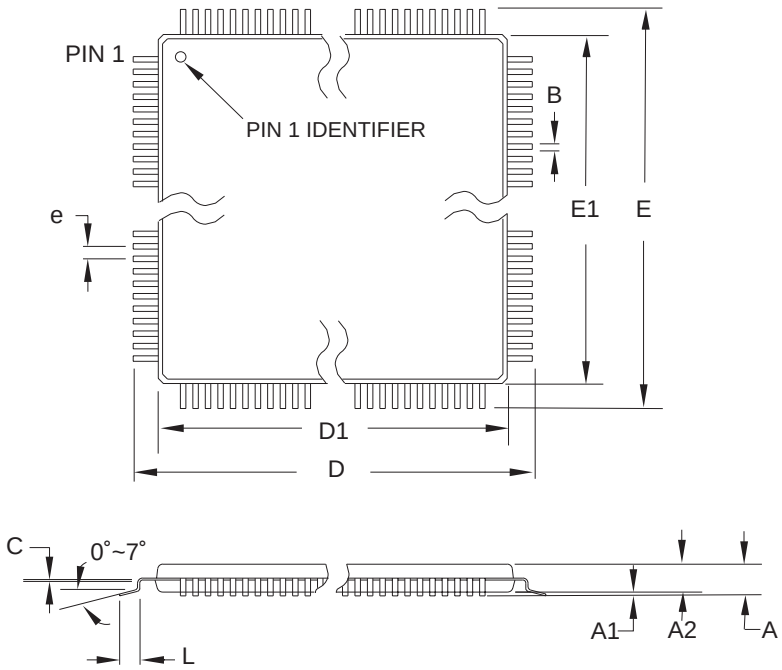

COMMON DIMENSIONS
(Unit of Measure = mm)

SYMBOL	MIN	NOM	MAX	NOTE
A	–	–	1.20	
A1	0.05	–	0.15	
A2	0.95	1.00	1.05	
D	11.75	12.00	12.25	
D1	9.90	10.00	10.10	Note 2
E	11.75	12.00	12.25	
E1	9.90	10.00	10.10	Note 2
B	0.30	–	0.45	
C	0.09	–	0.20	
L	0.45	–	0.75	
e	0.80 TYP			

Notes:
1. This package conforms to JEDEC reference MS-026, Variation ACB.
2. Dimensions D1 and E1 do not include mold protrusion. Allowable protrusion is 0.25 mm per side. Dimensions D1 and E1 are maximum plastic body size dimensions including mold mismatch.
3. Lead coplanarity is 0.10 mm maximum.

10/5/2001

	TITLE	DRAWING NO.	REV.
2325 Orchard Parkway San Jose, CA 95131	**44A,** 44-lead, 10 x 10 mm Body Size, 1.0 mm Body Thickness, 0.8 mm Lead Pitch, Thin Profile Plastic Quad Flat Package (TQFP)	44A	B

44J – PLCC

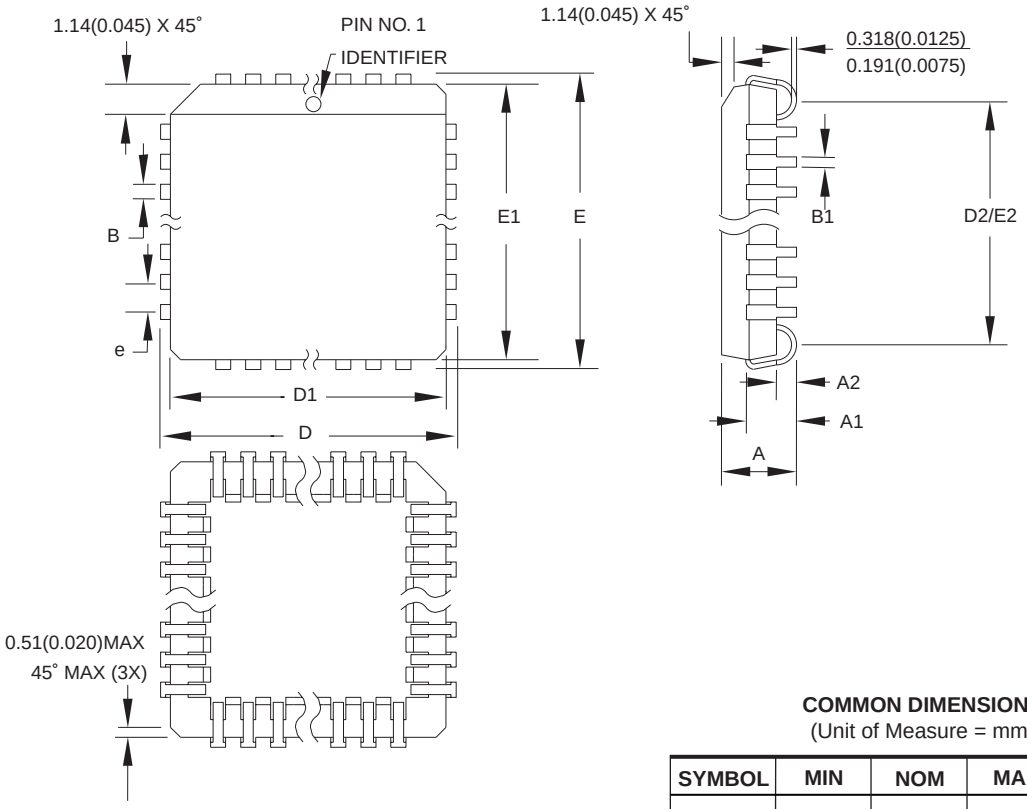

COMMON DIMENSIONS
(Unit of Measure = mm)

SYMBOL	MIN	NOM	MAX	NOTE
A	4.191	–	4.572	
A1	2.286	–	3.048	
A2	0.508	–	–	
D	17.399	–	17.653	
D1	16.510	–	16.662	Note 2
E	17.399	–	17.653	
E1	16.510	–	16.662	Note 2
D2/E2	14.986	–	16.002	
B	0.660	–	0.813	
B1	0.330	–	0.533	
e	1.270 TYP			

Notes:
1. This package conforms to JEDEC reference MS-018, Variation AC.
2. Dimensions D1 and E1 do not include mold protrusion. Allowable protrusion is .010"(0.254 mm) per side. Dimension D1 and E1 include mold mismatch and are measured at the extreme material condition at the upper or lower parting line.
3. Lead coplanarity is 0.004" (0.102 mm) maximum.

10/04/01

	TITLE	DRAWING NO.	REV.
2325 Orchard Parkway San Jose, CA 95131	**44J**, 44-lead, Plastic J-leaded Chip Carrier (PLCC)	44J	B

40P6 – PDIP

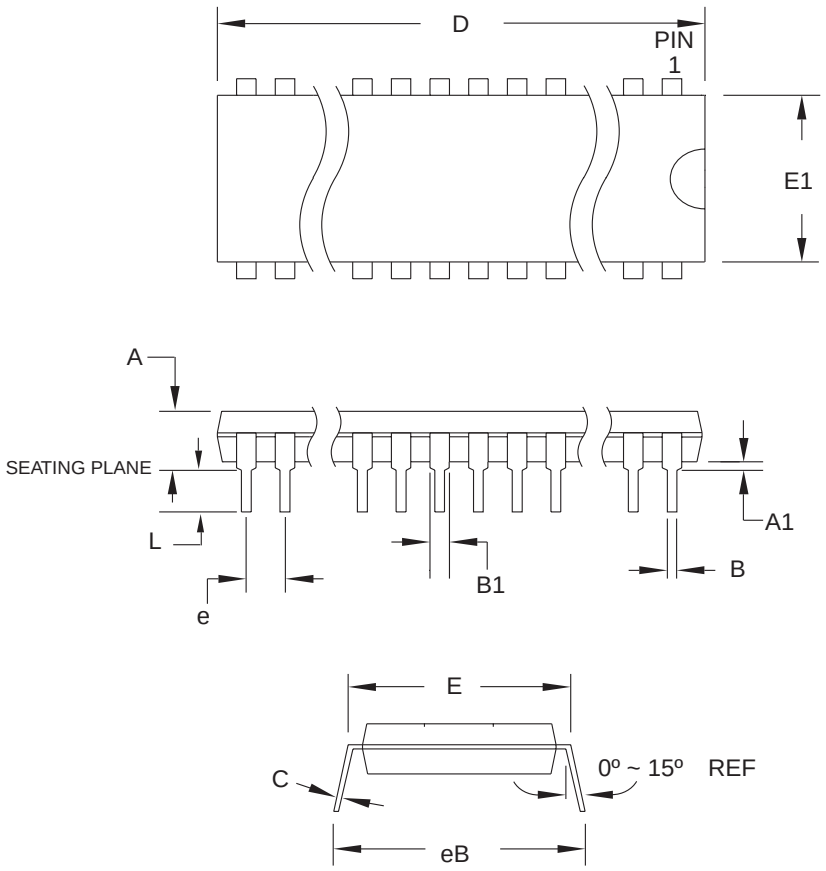

COMMON DIMENSIONS
(Unit of Measure = mm)

SYMBOL	MIN	NOM	MAX	NOTE
A	–	–	4.826	
A1	0.381	–	–	
D	52.070	–	52.578	Note 2
E	15.240	–	15.875	
E1	13.462	–	13.970	Note 2
B	0.356	–	0.559	
B1	1.041	–	1.651	
L	3.048	–	3.556	
C	0.203	–	0.381	
eB	15.494	–	17.526	
e	2.540 TYP			

Notes:
1. This package conforms to JEDEC reference MS-011, Variation AC.
2. Dimensions D and E1 do not include mold Flash or Protrusion. Mold Flash or Protrusion shall not exceed 0.25 mm (0.010").

09/28/01

2325 Orchard Parkway San Jose, CA 95131	**TITLE** **40P6**, 40-lead (0.600"/15.24 mm Wide) Plastic Dual Inline Package (PDIP)	**DRAWING NO.** 40P6	**REV.** B

42PS6 – PDIP

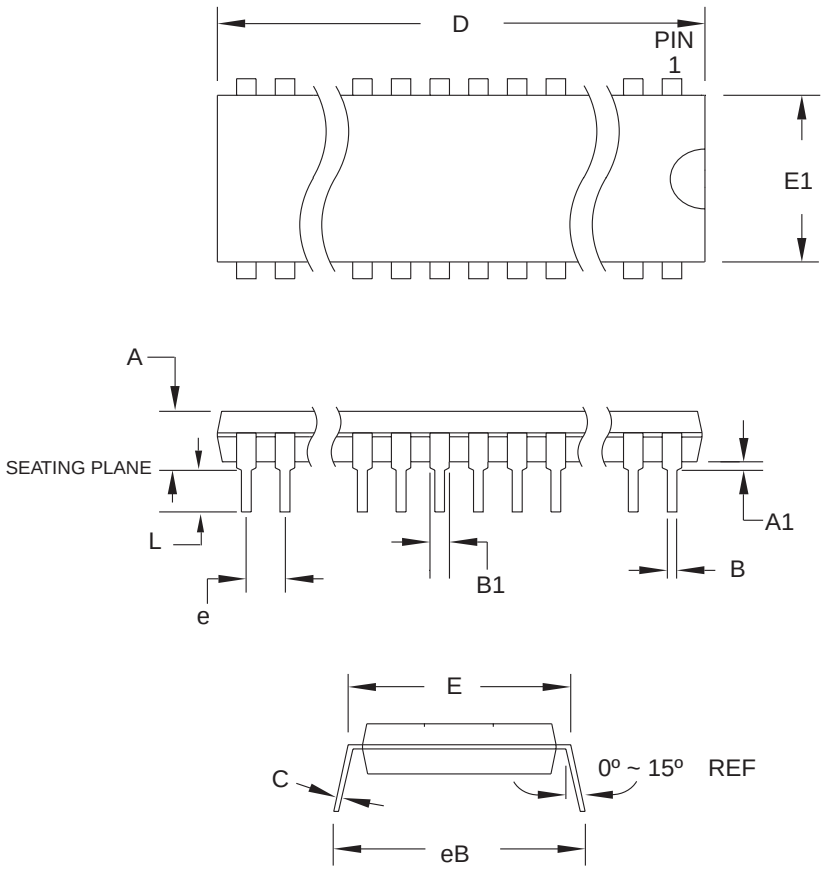

COMMON DIMENSIONS
(Unit of Measure = mm)

SYMBOL	MIN	NOM	MAX	NOTE
A	–	–	4.83	
A1	0.51	–	–	
D	36.70	–	36.96	Note 2
E	15.24	–	15.88	
E1	13.46	–	13.97	Note 2
B	0.38	–	0.56	
B1	0.76	–	1.27	
L	3.05	–	3.43	
C	0.20	–	0.30	
eB	–	–	18.55	
e	1.78 TYP			

Notes:
1. This package conforms to JEDEC reference MS-011, Variation AC.
2. Dimensions D and E1 do not include mold Flash or Protrusion. Mold Flash or Protrusion shall not exceed 0.25 mm (0.010").

11/6/03

	TITLE	DRAWING NO.	REV.
2325 Orchard Parkway San Jose, CA 95131	**42PS6**, 42-lead (0.600"/15.24 mm Wide) Plastic Dual Inline Package (PDIP)	42PS6	A

Atmel Corporation

2325 Orchard Parkway
San Jose, CA 95131, USA
Tel: 1(408) 441-0311
Fax: 1(408) 487-2600

Regional Headquarters

Europe
Atmel Sarl
Route des Arsenaux 41
Case Postale 80
CH-1705 Fribourg
Switzerland
Tel: (41) 26-426-5555
Fax: (41) 26-426-5500

Asia
Room 1219
Chinachem Golden Plaza
77 Mody Road Tsimshatsui
East Kowloon
Hong Kong
Tel: (852) 2721-9778
Fax: (852) 2722-1369

Japan
9F, Tonetsu Shinkawa Bldg.
1-24-8 Shinkawa
Chuo-ku, Tokyo 104-0033
Japan
Tel: (81) 3-3523-3551
Fax: (81) 3-3523-7581

Atmel Operations

Memory
2325 Orchard Parkway
San Jose, CA 95131, USA
Tel: 1(408) 441-0311
Fax: 1(408) 436-4314

Microcontrollers
2325 Orchard Parkway
San Jose, CA 95131, USA
Tel: 1(408) 441-0311
Fax: 1(408) 436-4314

La Chantrerie
BP 70602
44306 Nantes Cedex 3, France
Tel: (33) 2-40-18-18-18
Fax: (33) 2-40-18-19-60

ASIC/ASSP/Smart Cards
Zone Industrielle
13106 Rousset Cedex, France
Tel: (33) 4-42-53-60-00
Fax: (33) 4-42-53-60-01

1150 East Cheyenne Mtn. Blvd.
Colorado Springs, CO 80906, USA
Tel: 1(719) 576-3300
Fax: 1(719) 540-1759

Scottish Enterprise Technology Park
Maxwell Building
East Kilbride G75 0QR, Scotland
Tel: (44) 1355-803-000
Fax: (44) 1355-242-743

RF/Automotive
Theresienstrasse 2
Postfach 3535
74025 Heilbronn, Germany
Tel: (49) 71-31-67-0
Fax: (49) 71-31-67-2340

1150 East Cheyenne Mtn. Blvd.
Colorado Springs, CO 80906, USA
Tel: 1(719) 576-3300
Fax: 1(719) 540-1759

Biometrics/Imaging/Hi-Rel MPU/
High Speed Converters/RF Datacom
Avenue de Rochepleine
BP 123
38521 Saint-Egreve Cedex, France
Tel: (33) 4-76-58-30-00
Fax: (33) 4-76-58-34-80

Literature Requests
www.atmel.com/literature

Disclaimer: Atmel Corporation makes no warranty for the use of its products, other than those expressly contained in the Company's standard warranty which is detailed in Atmel's Terms and Conditions located on the Company's web site. The Company assumes no responsibility for any errors which may appear in this document, reserves the right to change devices or specifications detailed herein at any time without notice, and does not make any commitment to update the information contained herein. No licenses to patents or other intellectual property of Atmel are granted by the Company in connection with the sale of Atmel products, expressly or by implication. Atmel's products are not authorized for use as critical components in life support devices or systems.

© Atmel Corporation 2003. **All rights reserved.** Atmel® and combinations thereof are the registered trademarks of Atmel Corporation or its subsidiaries. MCS® is a registered trademark of Intel Corporation. Adobe® and Acrobat® are the registered trademarks of Adobe Systems Inc. Other terms and product names may be the trademarks of others.

Printed on recycled paper.

2487B–MICRO–12/03