CEL

PHOTOCOUPLER
PS2845-4A

WORLD'S SMALLEST CLASS, FOUR CHANNELS 12-PIN ULTRA SMALL SOP PHOTOCOUPLER

–NEPOC Series–

DESCRIPTION

The PS2845-4A is an optically coupled isolator containing GaAs light emitting diodes and NPN silicon phototransistors.

This product includes four channels in a single package for high-density mounting applications.

The PS2845-4A is the world's smallest class of photocouplers and realizes about 50% reduction in mounting area compared with the PS280x and PS281x Series.

FEATURES

- Ultra small and thin package
  (12-pin ultra small SOP, Pin pitch 0.8 mm, 4.4 (L) × 5.6 (W) × 2.5 (H))
- Common lead anode, cathode, collector common
- High current transfer ratio (CTR = 200% TYP. @ I_F = ±1mA)
- High isolation voltage (BV = 1 500 Vr.m.s.)
- Pb-Free product
- Ordering number of tape product: PS2845-4A-F3, F4: 2 500 pcs/reel
- Safety standards
  - UL approved: File No. E72422

PIN CONNECTIONS
(Top View)

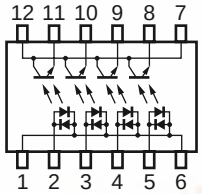

Channel	Anode, Cathode	Cathode, Anode	Emitter	Collector
1 ch	1, 6 common	2	11	7, 12 common
2 ch	1, 6 common	3	10	7, 12 common
3 ch	1, 6 common	4	9	7, 12 common
4 ch	1, 6 common	5	8	7, 12 common

APPLICATIONS

- Programmable logic controllers (PLCs)
- Input and output for function automation
- Hybrid IC

Document No. PN10203EJ03V0DS (3rd edition)
Date Published April 2005 CP(K)

The mark ★ shows major revised points.

PACKAGE DIMENSIONS (UNIT: mm)

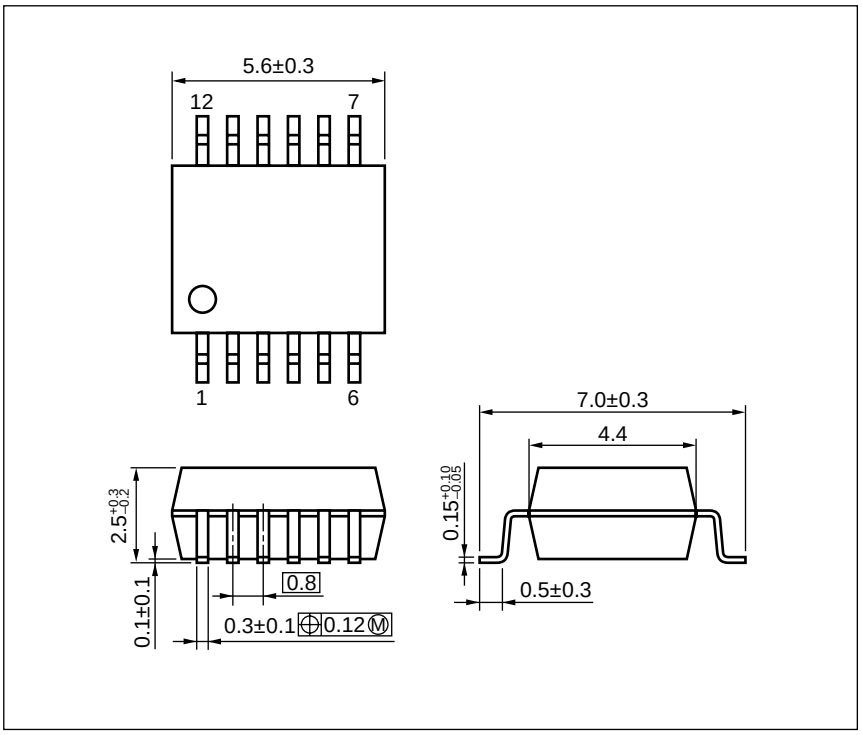

MARKING EXAMPLE

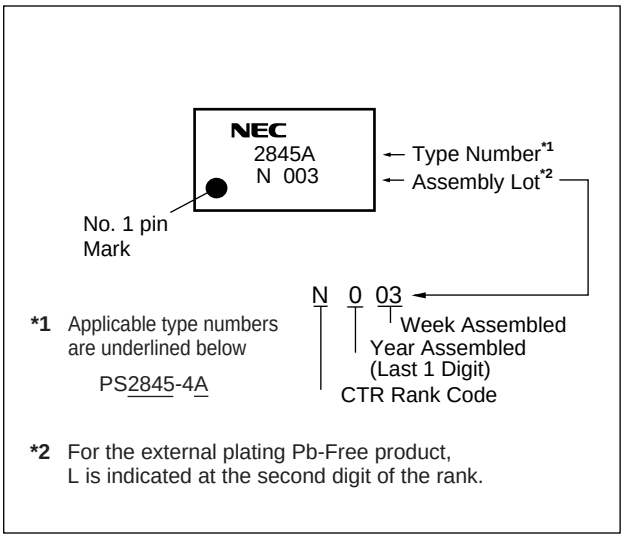

ORDERING INFORMATION

Part Number	Order Number	Solder Plating Specification	Packing Style	Safety Standard Approval	Application Part Number *1
PS2845-4A-F3	PS2845-4A-F3	Solder contains lead	Embossed Tape 2 500 pcs/reel	Standard products (UL Approved)	PS2845-4A
PS2845-4A-F4	PS2845-4A-F4				
PS2845-4A-F3	PS2845-4A-F3-A	Pb-Free			
PS2845-4A-F4	PS2845-4A-F4-A				

***1** For the application of the Safety Standard, following part number should be used.

ABSOLUTE MAXIMUM RATINGS (Unless otherwise specified, T_A = 25°C)

Parameter		Symbol	Ratings	Unit
Diode	Forward Current (DC)	I_F	±20	mA/ch
	Power Dissipation Derating	ΔI_F/°C	0.2	mA/°C
	Peak Forward Current *1	I_{FP}	±0.5	A
Transistor	Collector to Emitter Voltage	V_{CEO}	70	V
	Emitter to Collector Voltage	V_{ECO}	5	V
	Collector Current	I_C	20	mA/ch
	Power Dissipation Derating	ΔP_C/°C	0.4	mW/°C
	Power Dissipation	P_C	40	mW/ch
Isolation Voltage *2		BV	1 500	Vr.m.s.
Operating Ambient Temperature		T_A	–40 to +100	°C
Storage Temperature		T_{stg}	–55 to +125	°C

***1** PW = 100 μs, Duty Cycle = 1%

***2** AC voltage for 1 minute at T_A = 25°C, RH = 60% between input and output.
Pins 1-6 shorted together, 7-12 shorted together.

ELECTRICAL CHARACTERISTICS (T_A = 25°C)

Parameter		Symbol	Conditions	MIN.	TYP.	MAX.	Unit
Diode	Forward Voltage	V_F	I_F = ±1 mA	0.9	1.1	1.2	V
	Terminal Capacitance	C_t	V = 0 V, f = 1 MHz		30		pF
Transistor	Collector to Emitter Current	I_{CEO}	I_F = 0 mA, V_{CE} = 24 V			100	nA
Coupled	Current Transfer Ratio (I_C/I_F)	CTR	I_F = ±1 mA, V_{CE} = 0.4 V	100	200	400	%
	Optical Leakage Current *1 (1 to 2-ch, 2 to 3-ch, 3 to 4-ch)	I_L	I_F = 5 mA, V_{CE} = 24 V			100	nA
	Collector Saturation Voltage	$V_{CE\ (sat)}$	I_F = ±1 mA, I_C = 0.2 mA		0.13	0.3	V
	Isolation Resistance	R_{I-O}	V_{I-O} = 1 kV_{DC}	10^{11}			Ω
	Isolation Capacitance	C_{I-O}	V = 0 V, f = 1 MHz		0.4		pF
	Turn-on Time *2	t_{on}	V_{CC} = 5 V, I_F = ±1 mA, R_L = 5 kΩ		20		μs
	Turn-off Time *2	t_{off}			110		

***1** The optically induced leakage current is current which can be measured at transistor if LED = ”ON” and LED = ”OFF”.

LED of channel 1 is switched to ”ON”.

At Tr-output of channel 2 a voltage is applied and one can measure a current between emitter and collector.

This is leakage current (at I_F = 5 mA, V_{CEO} = 24 V).
Measurement circuits for optical leakage current
E.g. : In the case of 1 to 2-ch

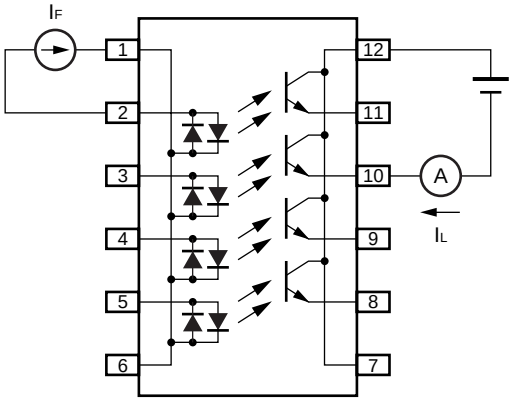

***2** Test circuit for switching time

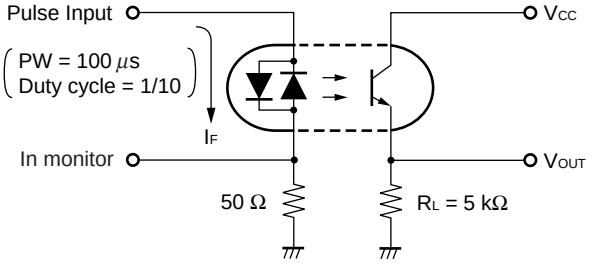

TYPICAL CHARACTERISTICS (Unless otherwise specified, T_A = 25°C)

MAXIMUM FORWARD CURRENT vs. AMBIENT TEMPERATURE

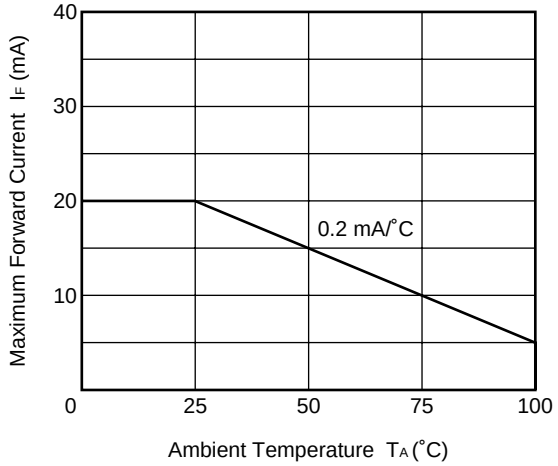

TRANSISTOR POWER DISSIPATION vs. AMBIENT TEMPERATURE

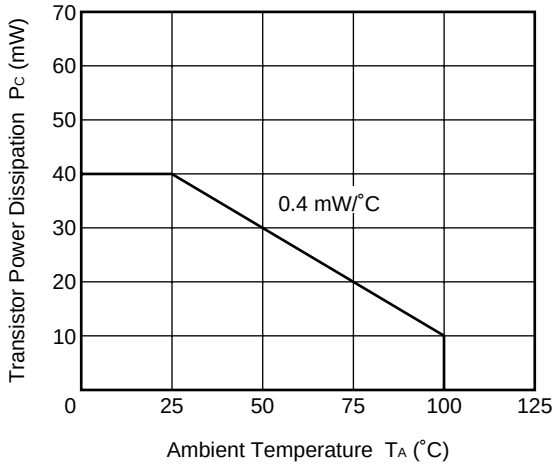

FORWARD CURRENT vs. FORWARD VOLTAGE

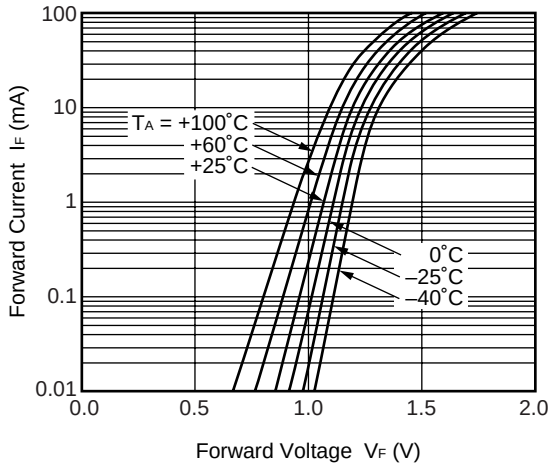

COLLECTOR CURRENT vs. COLLECTOR TO EMITTER VOLTAGE

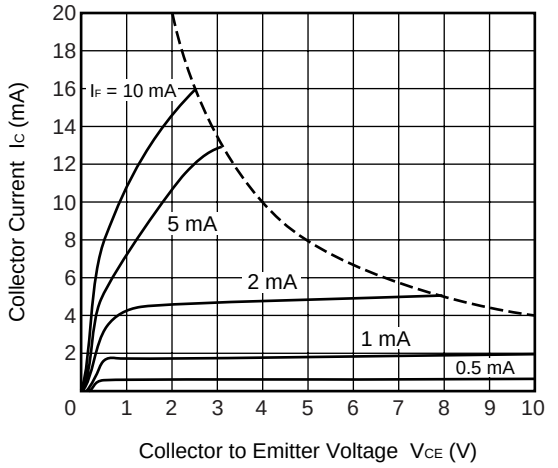

COLLECTOR TO EMITTER DARK CURRENT vs. AMBIENT TEMPERATURE

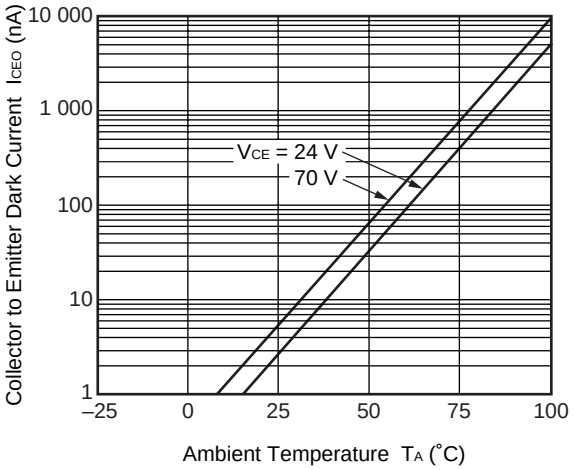

COLLECTOR CURRENT vs. COLLECTOR SATURATION VOLTAGE

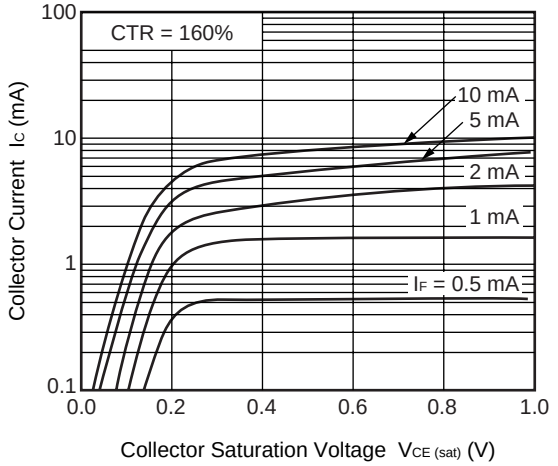

Remark The graphs indicate nominal characteristics.

NORMALIZED CURRENT TRANSFER RATIO vs. AMBIENT TEMPERATURE

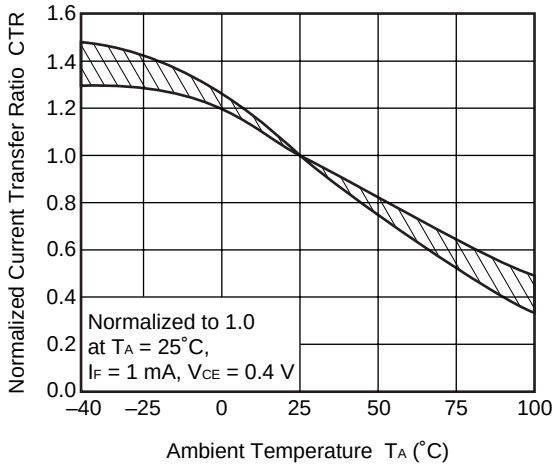

CURRENT TRANSFER RATIO vs. FORWARD CURRENT

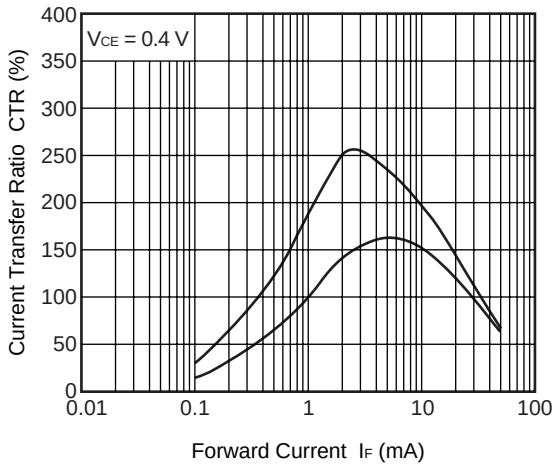

SWITCHING TIME vs. LOAD RESISTANCE

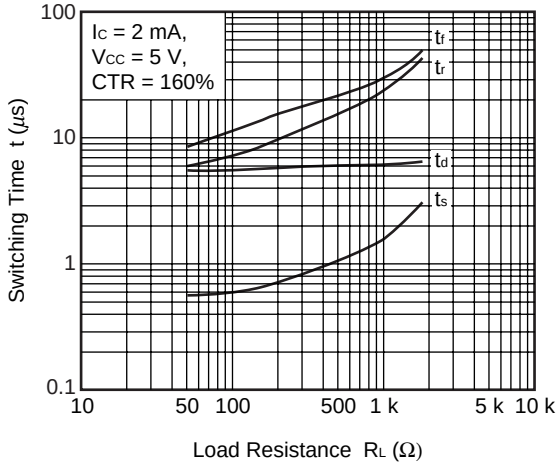

SWITCHING TIME vs. LOAD RESISTANCE

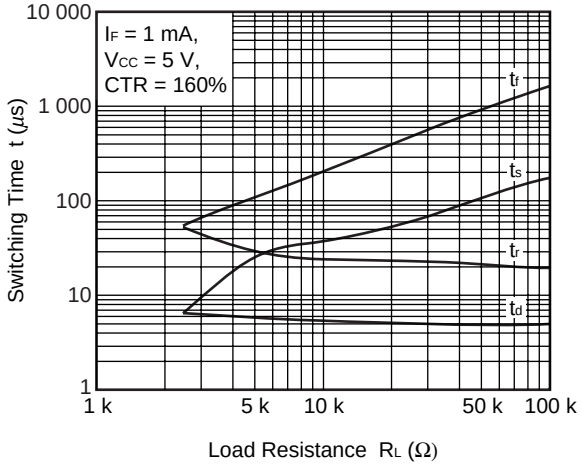

OPTICAL LEAKAGE CURRENT vs. FORWARD CURRENT

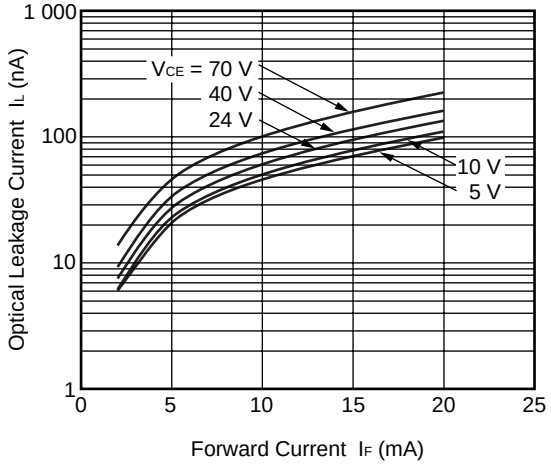

OPTICAL LEAKAGE CURRENT vs. AMBIENT TEMPERATURE

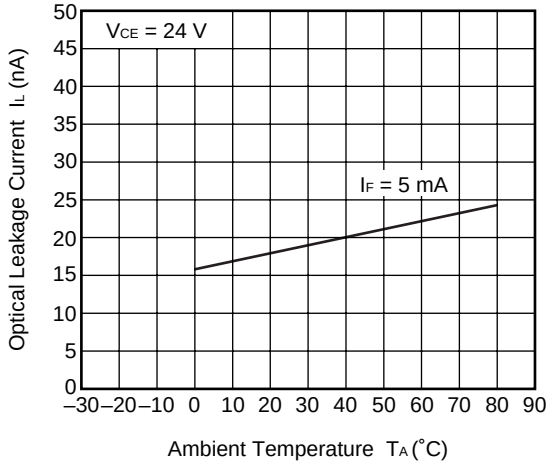

Remark The graphs indicate nominal characteristics.

★ **TAPING SPECIFICATIONS (UNIT: mm)**

Outline and Dimensions (Tape)

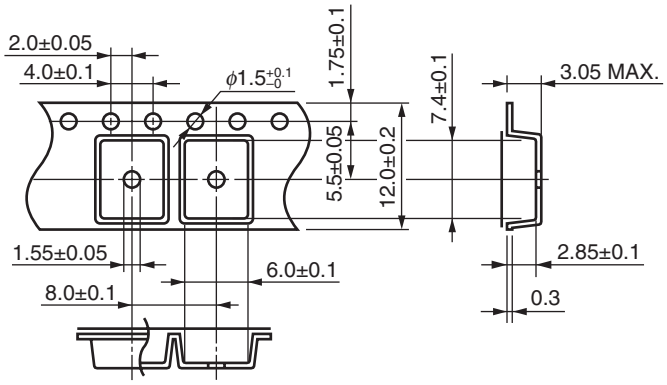

Tape Direction

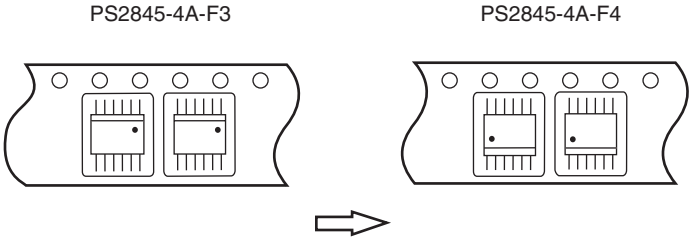

Outline and Dimensions (Reel)

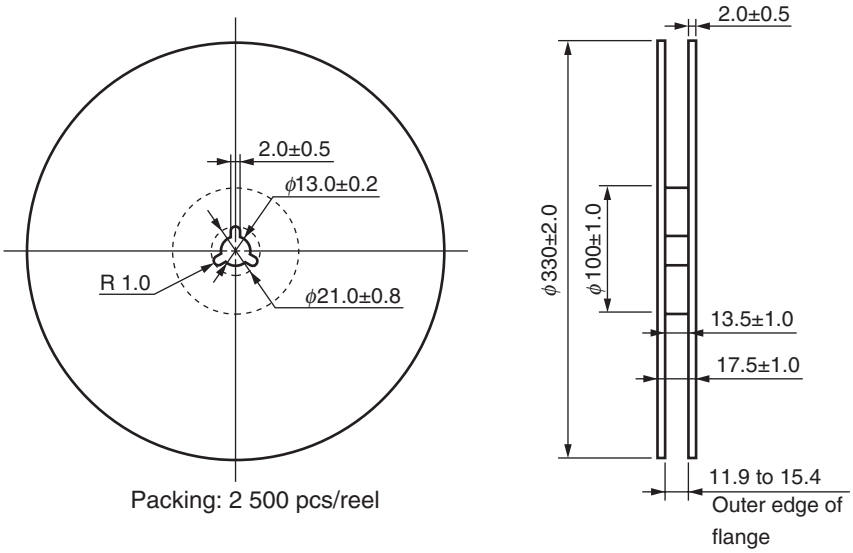

Packing: 2 500 pcs/reel

RECOMMENDED MOUNT PAD DIMENSIONS (UNIT: mm)

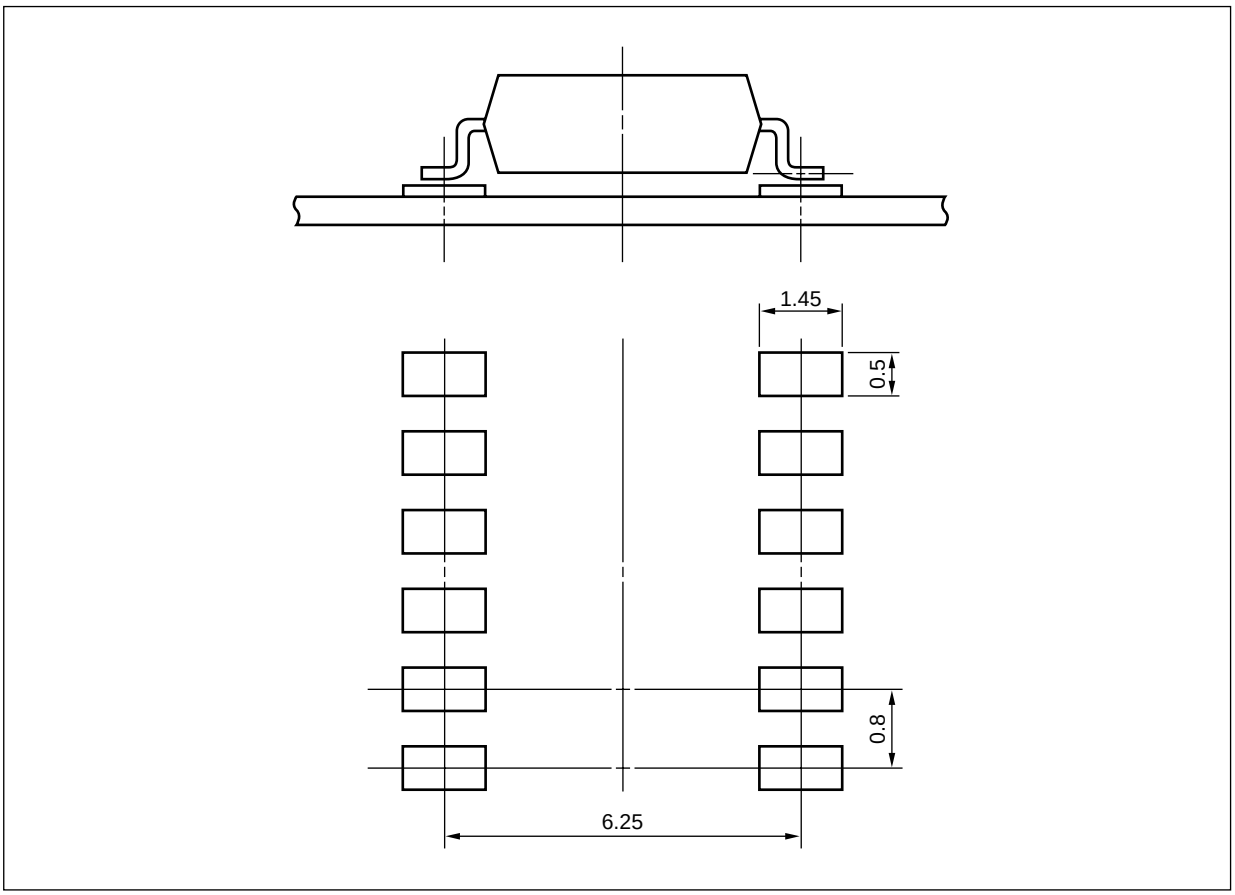

NOTES ON HANDLING

1. Recommended soldering conditions

(1) Infrared reflow soldering

- Peak reflow temperature — 260°C or below (package surface temperature)
- Time of peak reflow temperature — 10 seconds or less
- Time of temperature higher than 220°C — 60 seconds or less
- Time to preheat temperature from 120 to 180°C — 120±30 s
- Number of reflows — Three
- Flux — Rosin flux containing small amount of chlorine (The flux with a maximum chlorine content of 0.2 Wt% is recommended.)

Recommended Temperature Profile of Infrared Reflow

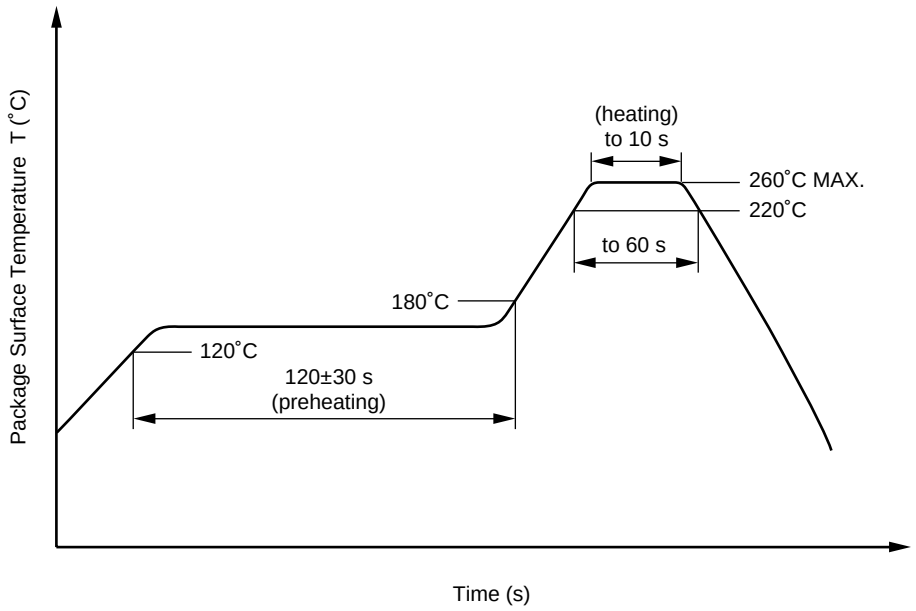

(2) Wave soldering

- Temperature — 260°C or below (molten solder temperature)
- Time — 10 seconds or less
- Preheating conditions — 120°C or below (package surface temperature)
- Number of times — One (Allowed to be dipped in solder including plastic mold portion.)
- Flux — Rosin flux containing small amount of chlorine (The flux with a maximum chlorine content of 0.2 Wt% is recommended.)

(3) Soldering by soldering iron

- Peak temperature (lead part temperature) — 350°C or below
- Time (each pins) — 3 seconds or less
- Flux — Rosin flux containing small amount of chlorine (The flux with a maximum chlorine content of 0.2 Wt% is recommended.)

(a) Soldering of leads should be made at the point 1.5 to 2.0 mm from the root of the lead.
(b) Please be sure that the temperature of the package would not be heated over 100°C.

(4) Cautions

- Fluxes

  Avoid removing the residual flux with freon-based and chlorine-based cleaning solvent.

2. Cautions regarding noise

Be aware that when voltage is applied suddenly between the photocoupler's input and output or between collector-emitters at startup, the output transistor may enter the on state, even if the voltage is within the absolute maximum ratings.

USAGE CAUTIONS

1. Protect against static electricity when handling.
2. Avoid storage at a high temperature and high humidity.

CEL California Eastern Laboratories

4590 Patrick Henry Drive
Santa Clara, CA 95054-1817
Telephone: (408) 919-2500
Facsimile: (408) 988-0279

Subject: Compliance with EU Directives

CEL certifies, to its knowledge, that semiconductor and laser products detailed below are compliant with the requirements of European Union (EU) Directive 2002/95/EC Restriction on Use of Hazardous Substances in electrical and electronic equipment (RoHS) and the requirements of EU Directive 2003/11/EC Restriction on Penta and Octa BDE.

CEL Pb-free products have the same base part number with a suffix added. The suffix –A indicates that the device is Pb-free. The –AZ suffix is used to designate devices containing Pb which are exempted from the requirement of RoHS directive (*). In all cases the devices have Pb-free terminals. All devices with these suffixes meet the requirements of the RoHS directive.

This status is based on CEL's understanding of the EU Directives and knowledge of the materials that go into its products as of the date of disclosure of this information.

Restricted Substance per RoHS	Concentration Limit per RoHS (values are not yet fixed)	Concentration contained in CEL devices	
		-A	-AZ
Lead (Pb)	< 1000 PPM	Not Detected	(*)
Mercury	< 1000 PPM	Not Detected	
Cadmium	< 100 PPM	Not Detected	
Hexavalent Chromium	< 1000 PPM	Not Detected	
PBB	< 1000 PPM	Not Detected	
PBDE	< 1000 PPM	Not Detected	

If you should have any additional questions regarding our devices and compliance to environmental standards, please do not hesitate to contact your local representative.