查询AA8622AP供应商 捷多邦，专业PCB打样工厂，24小时加急出货

Agamem Electronics Inc. AA8622AP

PRELIMINARY **Dual Video Amplifier**

■ DESCRIPTION

AA8622AP is a dual video amplifier with 6db gain, 75Ω output buffer and SAG correction. The 75Ω buffer is capable of driving two circuits. The SAG could reduce the output coupling capacitor. The power saving circuit provides the power saving function. The IC is available in 8-pin TSSOP package .

■ FEATURES

1. Composite video driver with 6dB gain
2. Dual channels video amplifier
3. Output short circuit protection function
4. SAG correction function
5. A load sufficient for driving two circuits
6. Low operating current, 25mA typical
7. Internal voltage clamp circuit
8. 8-pin TSSOP package

■ APPLICATION

- VCR
- Video Camera
- TV
- Video Player

■ AA8622AP BLOCK DIAGRAM

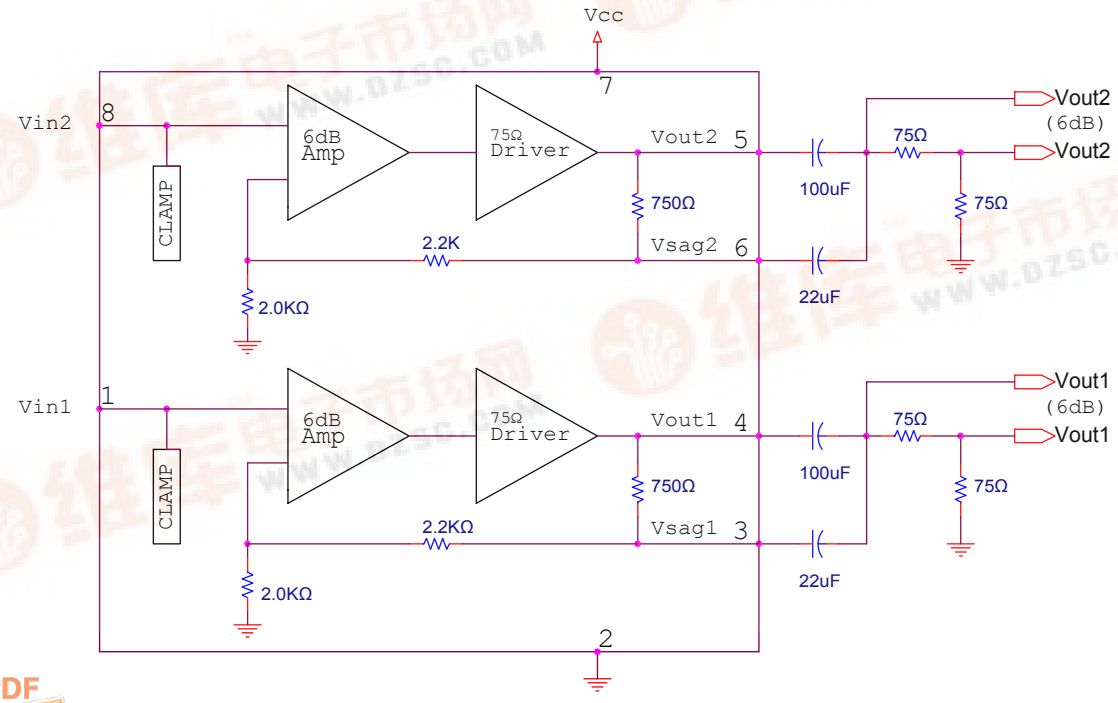

■ PIN DESCRIPTION

Symbol	Pin No	Type	Function
Vin1	1	I	Channel1 input terminal of 1V composite signal
GND	2	-	Ground
Vsag1	3	O	Channel 1 SAG correction output
Vout1	4	O	Channel 1 output
Vout2	5	O	Channel 2 output
Vsag2	6	O	Channel 2 SAG correction output
VCC	7	-	5V power supply
Vin2	8	I	Channel 2 input terminal of 1V composite signal

■ ABSOLUTE MAXIMUM RATING

Ta = 25 ℃

Parameter	Symbol	Rating			UNIT	CONDITION
		MIN	TYP	MAX		
Supply Voltage	**Vcc**	-0.3	5	7	V	
Operating Ambient Temperature	**Ta**	-25		75	℃	
Storage Temperature	**Ts**	-40		125	℃	

NOTE : Stress above those listed under “Absolute Maximum Rating” may cause permanent damage to the device. This is a stress rating only and functional operation of the device at these or any other conditions above those indicated in the operational section of this specification is not implied. Exposure to absolute maximum rating conditions for the extended periods of time may affect device reliability.

■ ELECTRICAL CHARACTERISTICS

Ta = 25℃ , Vcc = 5V

Parameter	Symbol	Min	Typ	Max	Unit	Condition
Supply Current	**Icc**		25	30	mA	No input Signal
Voltage Gain	**Gv**	5.5	6	6.5	dB	Input Signal Freq = 4.43MHz, 1V_{P-P}, measure V_{O1}
Frequency Characteristic	**G_F**	-1	-	1	dB	Input Signal Freq = 7MHz/1MHz, 1V_{P-P}, measure V_{O1}
Clamp Voltage		1.9	2.1	2.3	V	
Output DC level		1.0	1.2	1.4	V	
SAG-Terminal Gain	**G_{SAG}**	35	45		dB	
Differential Gain	**DG**		1	3	%	V_{IN} = 1V_{P-P}, refer staircase signal
Differential Phase	**DP**		1	3	deg	V_{IN} = 1V_{P-P}, refer staircase signal
Crosstalk	**CT**		-70		dB	V IN=1V 4.43M Sinewave

■ MEASUREMENT CIRCUIT

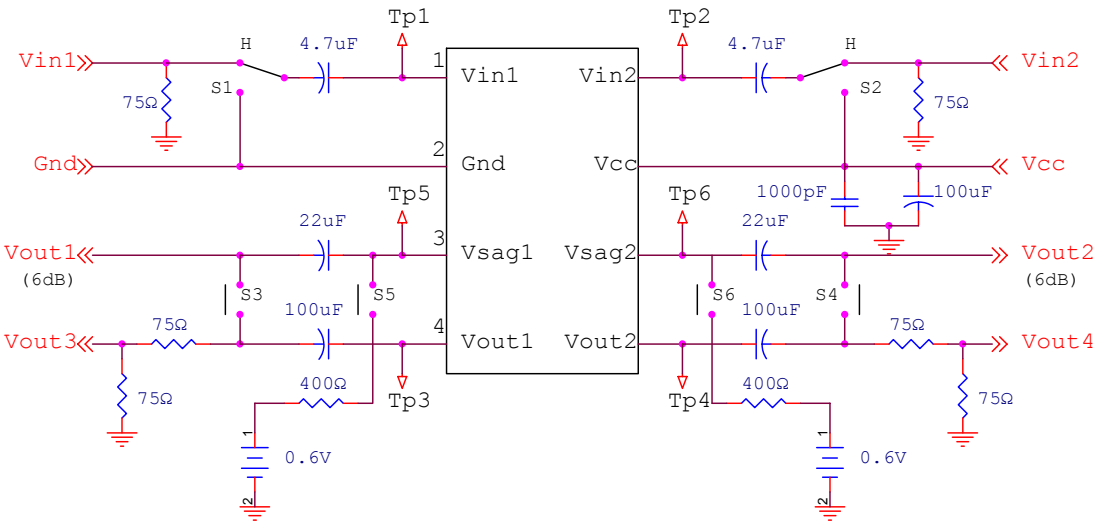

TEST METHODES								
PARAMETER	SYMBOL	SWITCH CONDITIONS						CONDITIONS
		S1	S2	S3	S4	S5	S6	
Supply Current	Icc	H	H					7PIN Sink Current
Voltage Gain	Gv	H	H	ON	ON			Vout1 / Vin. Vout2 / Vin2 at Vin1(Vin2)=1MHz, 1Vpp, Sinewave
Frequency Characteristic	Gf	H	H	ON	ON			Gv1M Voltage Gain at Vin1(Vin2)=1MHz, 1Vpp Gv10M Voltage Gain at Vin1(Vin2)=7MHz, 1Vpp Gf=Gv10M-Gv1M
Differential Gain	DG	H	H	ON	ON			Measuring Vout3 at Vin1=Staircase Signal
Differential Phase	DP	H	H	ON	ON			Measuring Vout3 at Vin1=Staircase Signal
Crosstalk	CT	H	L	ON	ON			Vout2 / Vout1 at Vin1=4.43MHz 1Vpp Sinewave Vout1 / Vin2 at Vin2=4.43MHz 1Vpp Sinewave
Gain Oftest	Gch	H	H	ON	ON			Gv1=Vout1 / Vin1, Gv2=Vout2/Vin2 Gch=Gv1-Gv2
Input Clamp Voltage	Vcl	H	H					Measuring at TP1 (TP2)
SAG Terminal Gain	Gsag	H	H					TP3(TP4) Voltage; V01A(V02A), TP5(TP6) voltage. Vso1A(Vso2A)
		H	H			ON	ON	TP3(TP4) Voltage; V01A(V02A), TP5(TP6) voltage. Vso1B(Vso2B) Gsag=20log[(V01B-V01A) / (Vso1A-Vso1B)] Gsag=20log[(V02B-V02A) / (Vso2A-Vso2B)]

■ TSSOP 8L PACKAGE DIMENSION

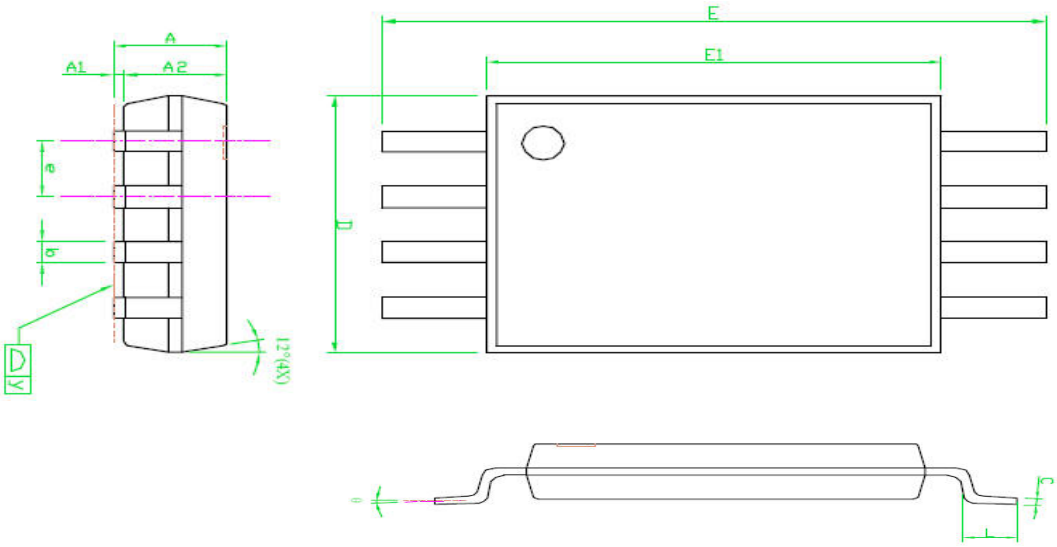

NOTES:
1. Package body sizes exclude mold flash protrusions or gate burrs
2. Tolerance ± 0.1 ㎜ (4 mil) unless otherwise specified
3. Coplanarity:0.1 ㎜
4. Controlling dimension is millimeter converted inch dimensions are not necessarily exact
5. Followed from jedec mo-153

SYMBOLS	DIMENSIONS IN MILLIMETERS			DIMENSIONS IN INCHES		
	MIN	NOM	MAX	MIN	NOM	MAX
A	- - -	- - -	1.20	- - -	- - -	0.048
A1	0.05	- - -	0.15	0.002	- - -	0.006
A2	0.80	1.00	1.05	0.031	0.039	0.041
b	0.19	- - -	0.30	0.007	- - -	0.012
C	0.09	- - -	0.20	0.004	- - -	0.008
D	2.90	3.00	3.10	0.114	0.118	0.122
E	6.20	6.40	6.60	0.244	0.252	0.260
E1	4.30	4.40	4.50	0.169	0.173	0.177
e	- - -	0.65	- - -	- - -	0.026	- - -
L	0.45	0.60	0.75	0.018	0.024	0.030
y	- - -	- - -	0.10	- - -	- - -	0.004
θ	0°	- - -	8°	0°	- - -	8°