查询AAT1500供应商 捷多邦，专业PCB打样工厂，24小时加急出货

Advanced Analog Technology, Inc.

AAT1500

Product information presented is current as of publication date. Details are subject to change without notice

CONSTANT CURRENT BOOST CONVERTER FOR 1 TO 4 WHITE LEDS

Features

- Up to 4 LEDs at 2.8V Supply
- High Efficiency (85%)
- Output Over Voltage Protection
- HV Internal Switch
- 1 MHz PWM Switching Frequency
- Uses Tiny 1 mm Height Inductor
- 2.6V to 6V Input Range
- 0.1µA Shutdown Current
- SOT-26 & VQFN-8 Package Available

General Description

The AAT1500 is a step-up converter that provides a solution to drive 1 to 4 white LEDs with a constant current from a Lithium Ion cell, and its switching frequency is fixed at 1 MHz.

The AAT1500 offers a low 0.25V reference, which minimizes power loss in the current setting resistor and improves efficiency. Protection feature includes output over voltage protection. The AAT1500 consists of a 0.1µA shutdown current, and HV internal switch. Input supple range allows operation from 2.6V to 6V.

The AAT1500 is available in 6-pin SOT-26 and 8-pin VQFN-8 package.

Pin Configuration

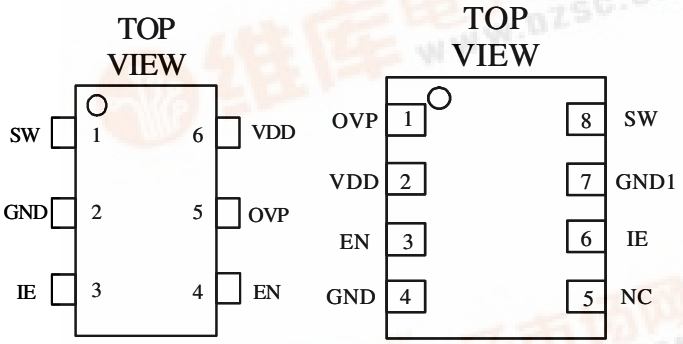

SOT-26 PACKAGE

VQFN-8 PACKAGE

Applications

- Palmtops
- MP3 Player
- Digital Still Cameras
- Portable Media Player
- Cell Phones and Smart Phones
- Electronic Information Organizers

找PDF 维库一下 pdf.dzsc.com

Pin Description

PIN NO SOT-26	PIN NO VQFN-8	NAME	I/O	DESCRIPTION
1	8	SW	O	Switch Pin
2	4	GND	-	Ground
3	6	IE	I	Inverting Input Pin of Error Amplifier
4	3	EN	I	Chip Enable/Disable(Active High)
5	1	OVP	I	Over Voltage Protection
6	2	VDD	-	Supply Voltage
-	7	GND1	-	SW MOS Ground
-	5	NC	-	NC

Absolute Maximum Ratings (Note 1)

CHARACTERISTICS	SYMBOL	VALUE	UNIT
Supply Voltage	V_{DD}	– 0.3 to 7	V
SW, OVP to GND		– 0.3 to 21	V
Other I/O Pin Voltage		– 0.3 to 6	V
Junction Temperature		125	°C
Storage Temperature Range	$T_{storage}$	– 45 to 125	°C
Operating Temperature Range	T_C	– 40 to 85	°C
Lead Temperature	T_L	260	°C

Recommended Operating Conditions

CHARACTERISTICS	SYMBOL	VALUE	UNIT
Supply Voltage	V_{DD}	2.6 to 6	V

Dissipation Ratings

CHARACTERISTICS	PACKAGE	SYMBOL	VALUE	UNIT
Package Thermal Resistance	SOT-26	θ_{JA}	208	°C/W
	VQFN-8	θ_{JA}	50	°C/W
Power Dissipation, $T_C = 25\,^{o}C$	SOT-26	P_d	0.48	W
	VQFN-8	P_d	2	W

Electrical Characteristics, V_{DD} = 3.6 V, T_C = 25 °C (Unless Otherwise Specified)

Operating Condition

PARAMETER	SYMBOL	TEST CONDITION	MIN	TYP	MAX	UNIT
Supply Voltage	V_{DD}		2.6		6.0	V
Under Voltage Lockout	V_{UVLO}		1.8	2.2	2.3	V
Operating Current	I_{DD}	V_{DD} = 5.5V, Switch On			2	mA
Quiescent Current	I_Q	V_{DD} = 5.5V V_{FB} = 1.3V, Switch Off		250	500	µA
Shutdown Current	I_{SD}	V_{DD} = 5.5V, V_{EN} < 0.4V		0.1	1	µA

Oscillator

PARAMETER	SYMBOL	TEST CONDITION	MIN	TYP	MAX	UNIT
Operating Frequency	f_{OSC}		0.8	1.0	1.2	MHz
Maximum Duty Cycle	D_{MAX}		79	85	92	%

Reference Voltage

PARAMETER	SYMBOL	TEST CONDITION	MIN	TYP	MAX	UNIT
Feedback Voltage	V_{IE}	Note 2	0.237	0.250	0.263	V

N-Channel Switch

PARAMETER	SYMBOL	TEST CONDITION	MIN	TYP	MAX	UNIT
Current Limit	I_{LIM}		0.60	0.75	0.90	A
On-Resistance	R_{ON}		0.50	0.75	1.00	Ω
Leakage Current	I_{SWOFF}	V_{SW} = 12V		0.01	20.00	µA

Control and Protection

PARAMETER	SYMBOL	TEST CONDITION	MIN	TYP	MAX	UNIT
EN pin Current	I_{EN}			4	6	µA
OVP Threshold	V_{OVP}		14.5	15.5	20.0	V
Chip Enable/Disable	V_{ENH}	Chip Enable		0.8	1.4	V
	V_{ENL}	Chip Disable	0.4	0.8		V

Note 1. Stresses beyond those listed under "Absolute Maximum Ratings" may cause permanent damage to the device. Exposure to absolute maximum rating conditions for extended period of time may affect device reliability.

Note 2. To measure the feedback voltage, the device V_{IE} would connect to the application circuit. The inductance is 10 µH and the output voltage equals 12V.

Block Diagram
SOT-26 and VQFN-8

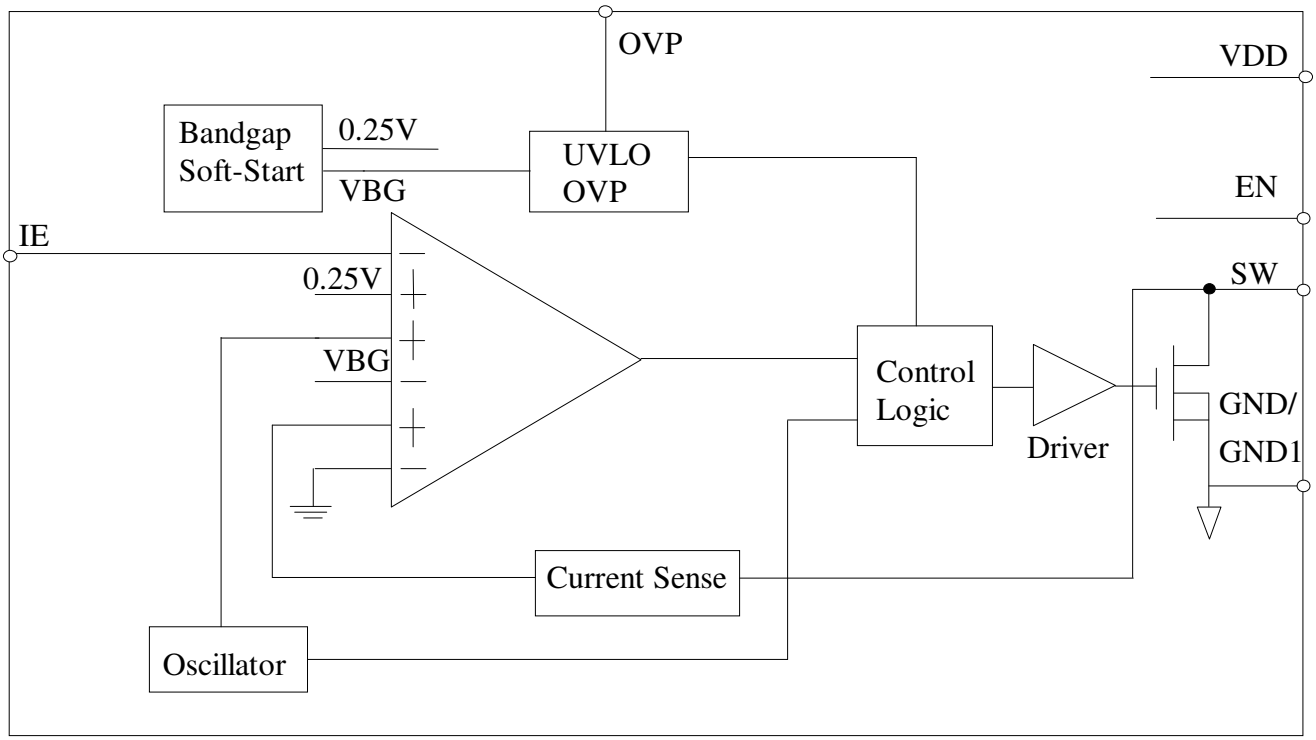

Application Circuit

SOT-26

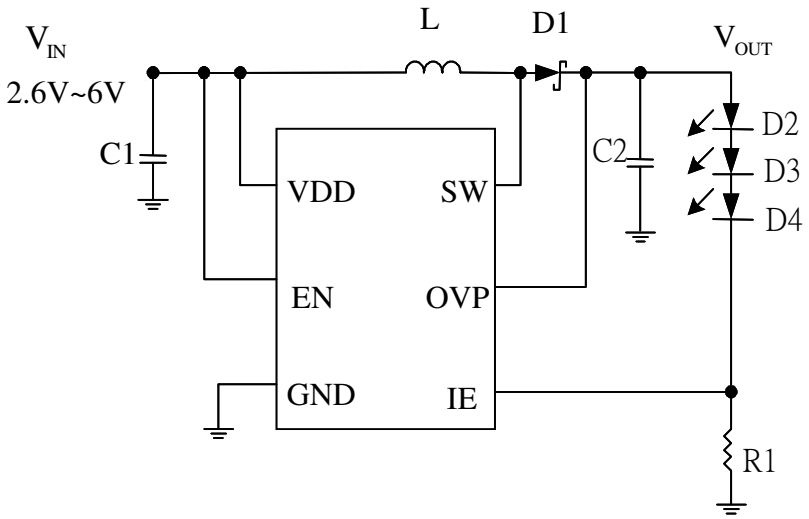

VQFN-8

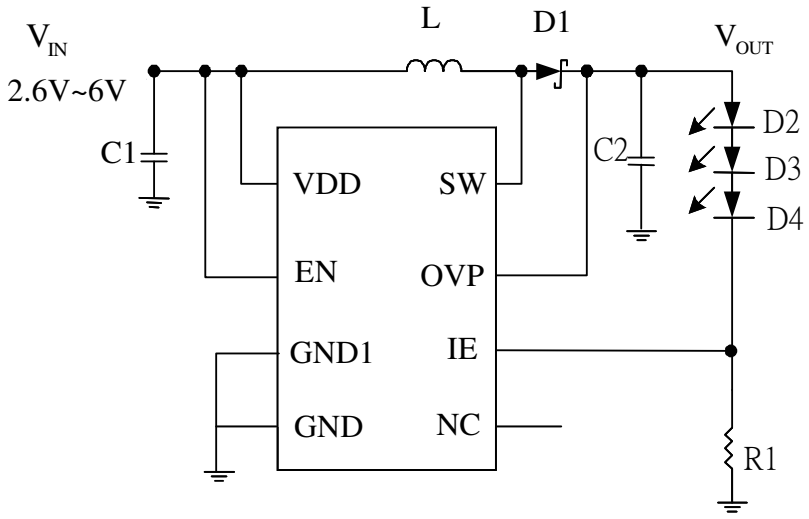

Package Dimensions
SOT-26

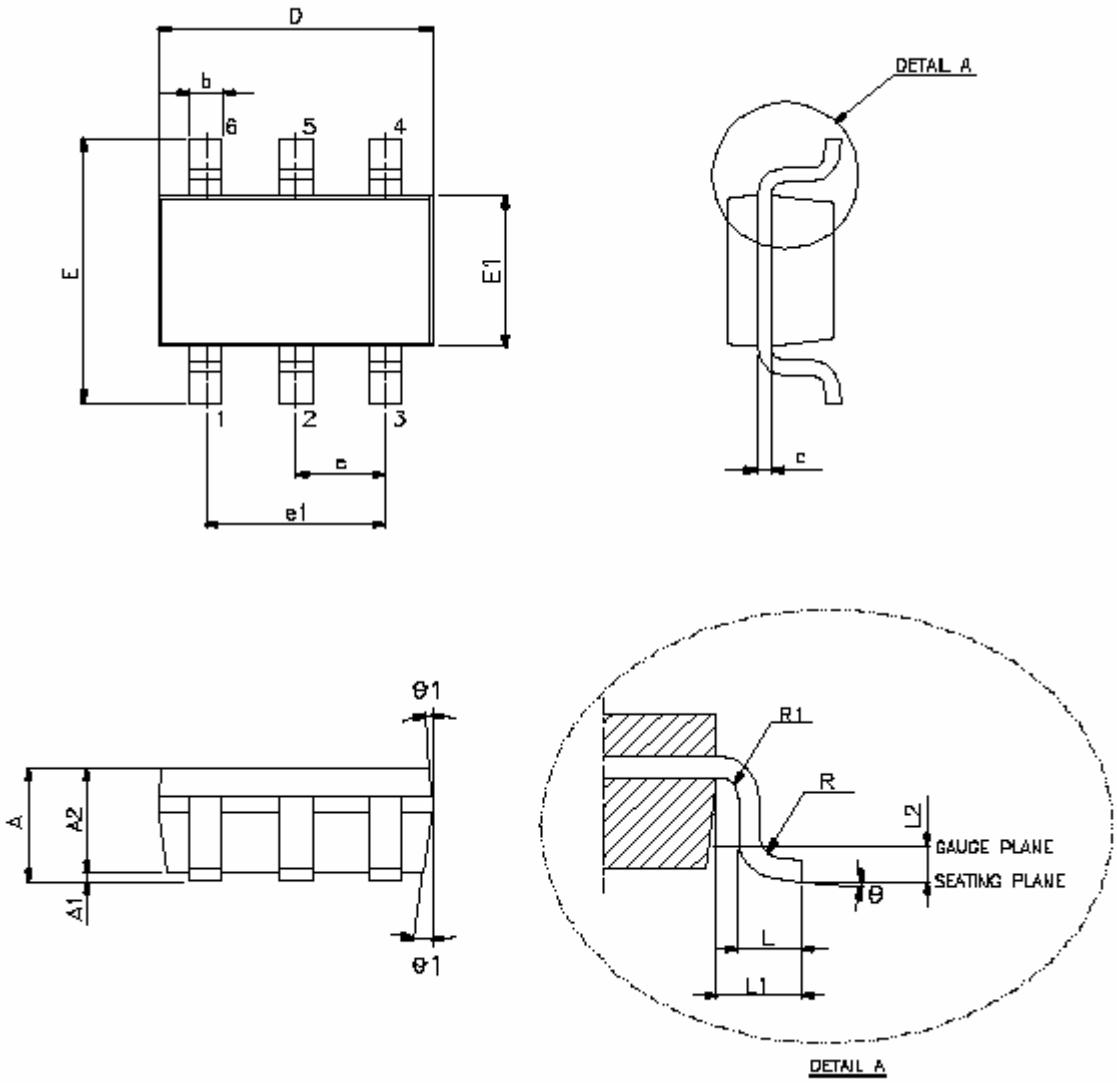

Package Dimensions

SOT-26(Cont.)

VARIATION (ALL DIMENSIONS SHOWN IN MILLIMETERS)

SYMBOL	MIN	TYP	MAX
A	------	------	1.45
A1	------	------	0.15
A2	0.90	1.15	1.30
b	0.30	------	0.50
c	0.08	------	0.22
D	2.90 BSC		
E	2.80 BSC		
E1	1.60 BSC		
e	0.95 BSC		
e1	1.90 BSC		
L	0.30	0.45	0.60
L1	0.60 REF		
L2	0.25 BSC		
R	0.10	------	------
R1	0.10	------	0.25
θ	0°	4°	8°
θ1	5°	10°	15°

NOTE:

1 JEDEC OUTLINE: MO-178 AB

Tape and Reel
SOT-26
Packing Method: 3,000pcs/reel, 5 reels/box

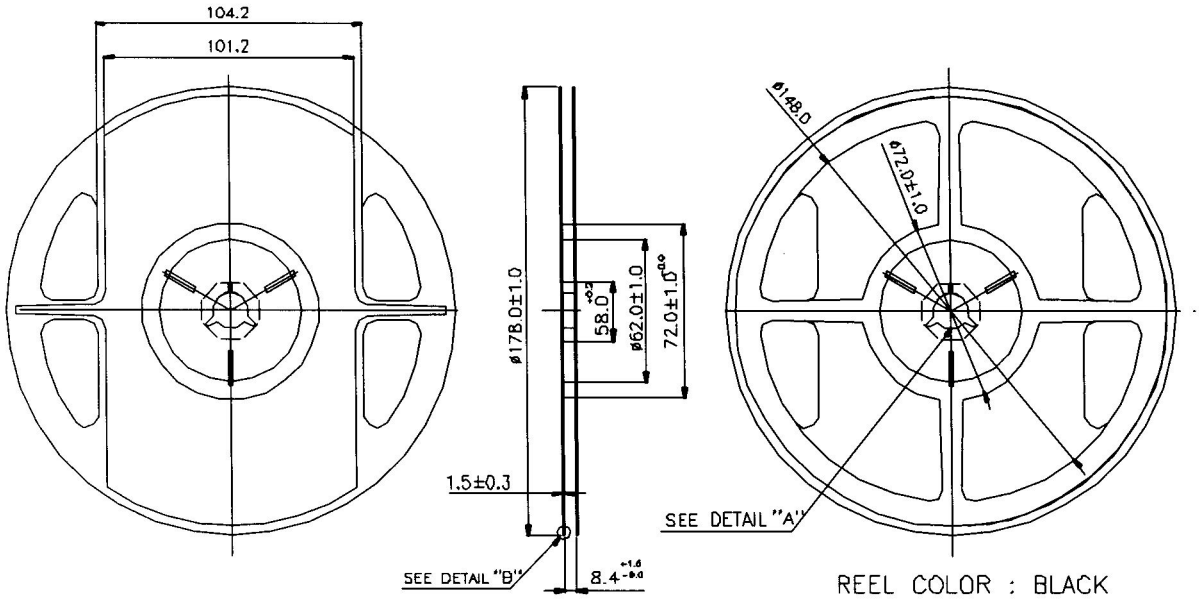

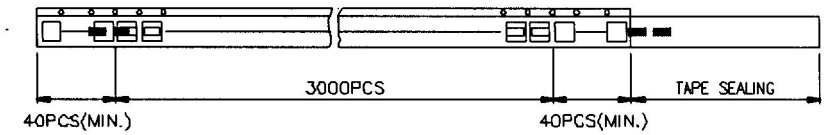

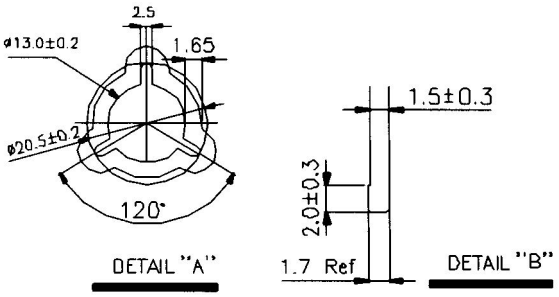

Tape and Reel
SOT-26(Cont.)

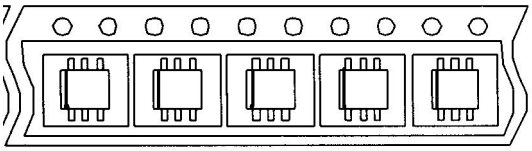

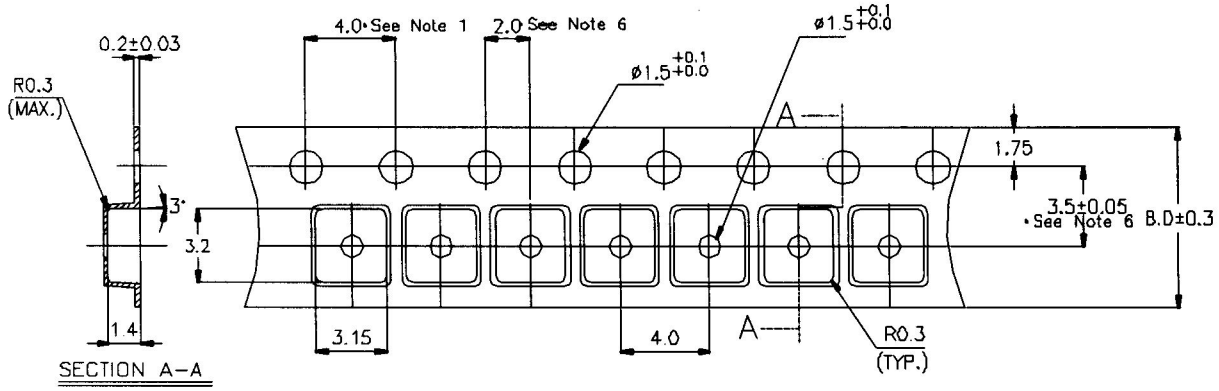

X.XXX X	±	0.0025
X.XXX	±	0.006
X.XX	±	0.025
X.X	±	0.10
X	±	0.25

UNIT: MILLIMETERS

Part Marking

SOT-26 TOP MARKING

XXX

VQFN-8 TOP MARKING

XXX

NOTE: BOTH SOT-26 AND VQFN-8 HAVE NO BACK MARKING.

Package Dimensions
VQFN-8

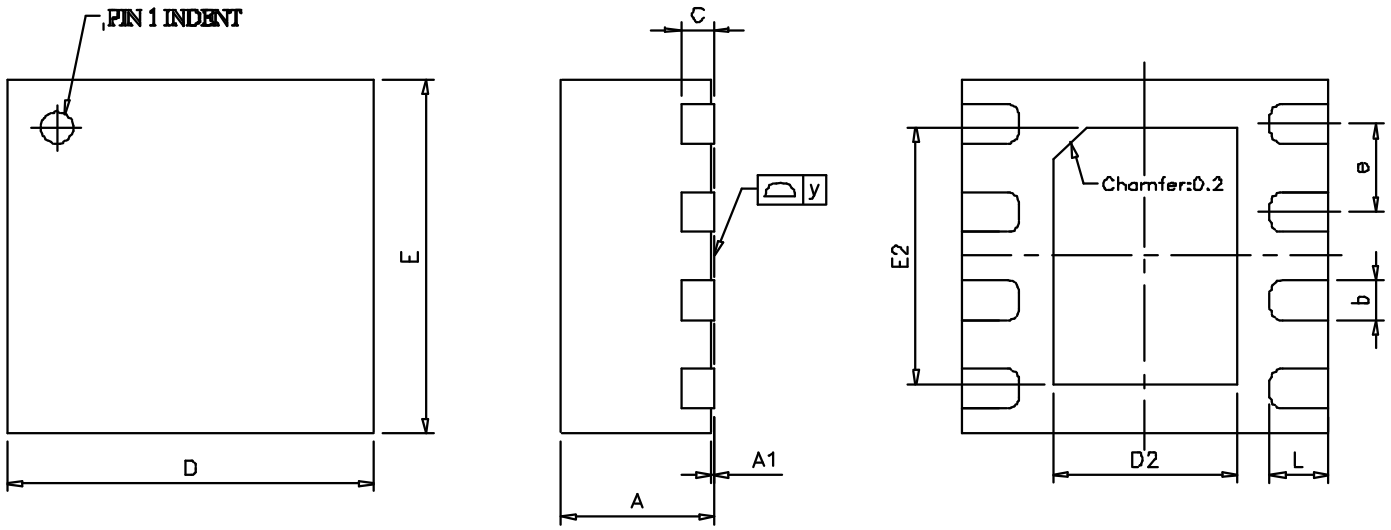

Symbol	Dimensions In Millimeters		
	Min	TYP	Max
A	0.8	0.9	1.0
A1	0.00	0.02	0.05
b	0.20	0.25	0.30
C	0.19	0.20	0.25
D	2.1	2.2	2.3
D2	1.0	1.1	1.2
E	2.1	2.2	2.3
E2	1.5	1.6	1.7
e	------	0.55	------
L	0.25	0.35	0.45
y	0.000	------	0.076