AN2050FB

CCD Monochrome Video Camera Signal Processor IC

■ Overview

The AN2050FB is an integrated circuit specified to the monochrome CCD image element which is employed in the monitoring video cameras, door phones, TV telephone sets, etc. The high frequency block and power block that are composed of 3-chip of DS signal processing, AGC. Γ compensating and NTSC output so far, are integrated into one chip to offer low cost.

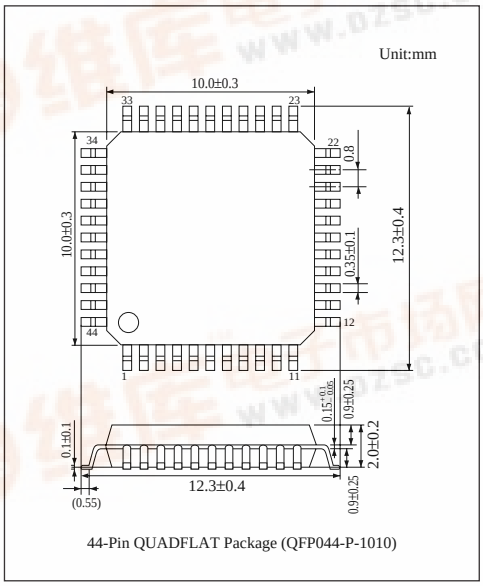

44-Pin QUADFLAT Package (QFP044-P-1010)

■ Features

- Frequency characteristics:10MHz (icompatible with the CCD image element of 330,000 pixels)
- AGC range:18dB (improved SN ratio)
- Operating supply voltage range:4.5V to 5.3V (typ. 5V)
- Power consumption:typ. 225mW

■ Block Diagram

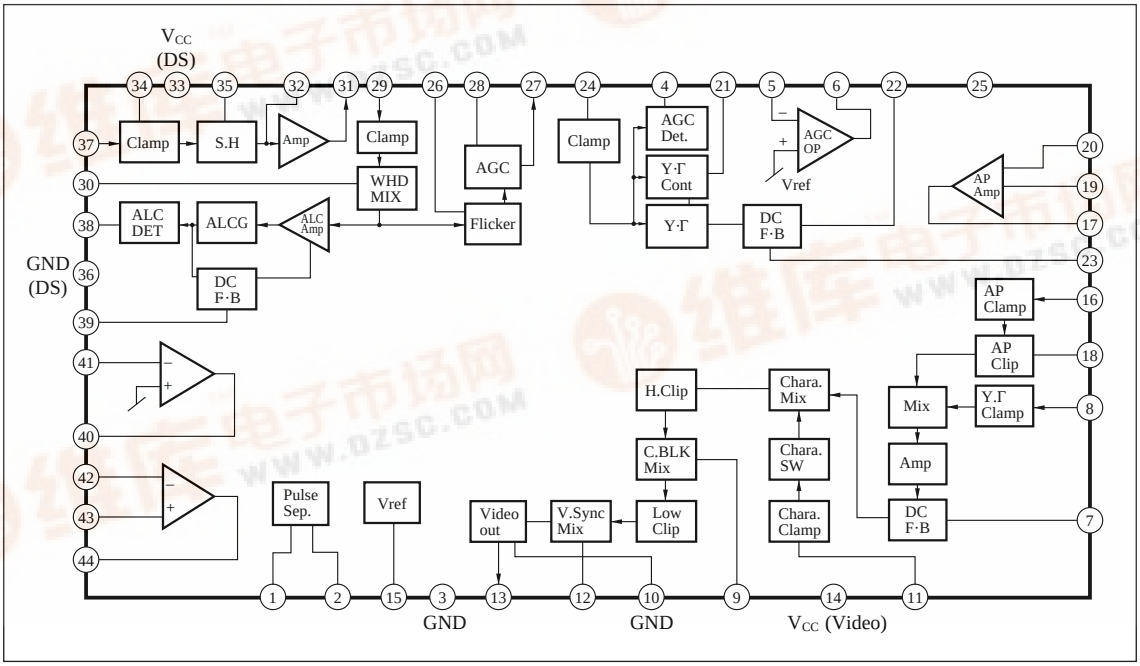

■ Absolute Maximum Ratings (Ta=25˚C)

Parameter	Symbol	Rating	Unit
Supply voltage	V_{CC}	5.5	V
Supply current	I_{CC}	54	mA
Power dissipation	P_D	280	mW
Operating ambient temperature	T_{opr}	–20 to +75	˚C
Storage temperature	T_{stg}	–55 to +125	˚C

■ Recommended Operating Range (Ta=25˚C)

Parameter	Symbol	Range
Operating supply voltage range	V_{CC}	4.5V to 5.3V

■ Electrical Characteristics (Ta=25˚C)

Parameter	Symbol	Condition	min	typ	max	Unit
OB control (1)	V_{OB1}	V_{CC}=5V	35	55	75	mV_{PP}
OB control (2)	V_{OB2}	V_{CC}=5V	–85	–65	–45	mV_{PP}
AGC amp gain (1)	G_{AGC1}	V_{CC}=5V	130	170	210	mV_{PP}
AGC amp gain (2)	G_{AGC2}	V_{CC}=5V	16	19	22	dB
ALC DET output	V_{ALC}	V_{CC}=5V	500	600	700	mV_{PP}
Γ circuit gain (1)	$G\Gamma_1$	V_{CC}=5V	660	800	940	mV_{PP}
Γ circuit gain (2)	$G\Gamma_2$	V_{CC}=5V	—	—	550	mV_{PP}
AGC DET output	$V_{AGC/DET}$	V_{CC}=5V	400	480	560	mV_{PP}
AP clip (1)	G_{CL1}	V_{CC}=5V	0.9	1.1	1.4	V_{PP}
AP clip (2)	G_{CL2}	V_{CC}=5V	—	—	–10	dB
YΓ amp gain	$G_Y\Gamma$	V_{CC}=5V	1.1	1.3	1.5	V_{PP}
Supply current (1)	I_{25}	V_{CC}=5V	26.5	31	35.5	mA
Supply current (2)	I_{33}	V_{CC}=5V	9.5	14	18.5	mA
CP1 pulse separation level	V_{CP1}	V_{CC}=5V	3.4	3.8	4.2	V
WHD pulse separation level	V_{WHD}	V_{CC}=5V	2.15	2.55	2.95	V
WBL pulse separation level	V_{WBL}	V_{CC}=5V	0.4	0.8	1.2	V
CP2 pulse separation level	V_{CP2}	V_{CC}=5V	3.1	3.5	3.9	V
BLK pulse separation level	V_{BLK}	V_{CC}=5V	0.6	1	1.4	V

■ Application Circuit

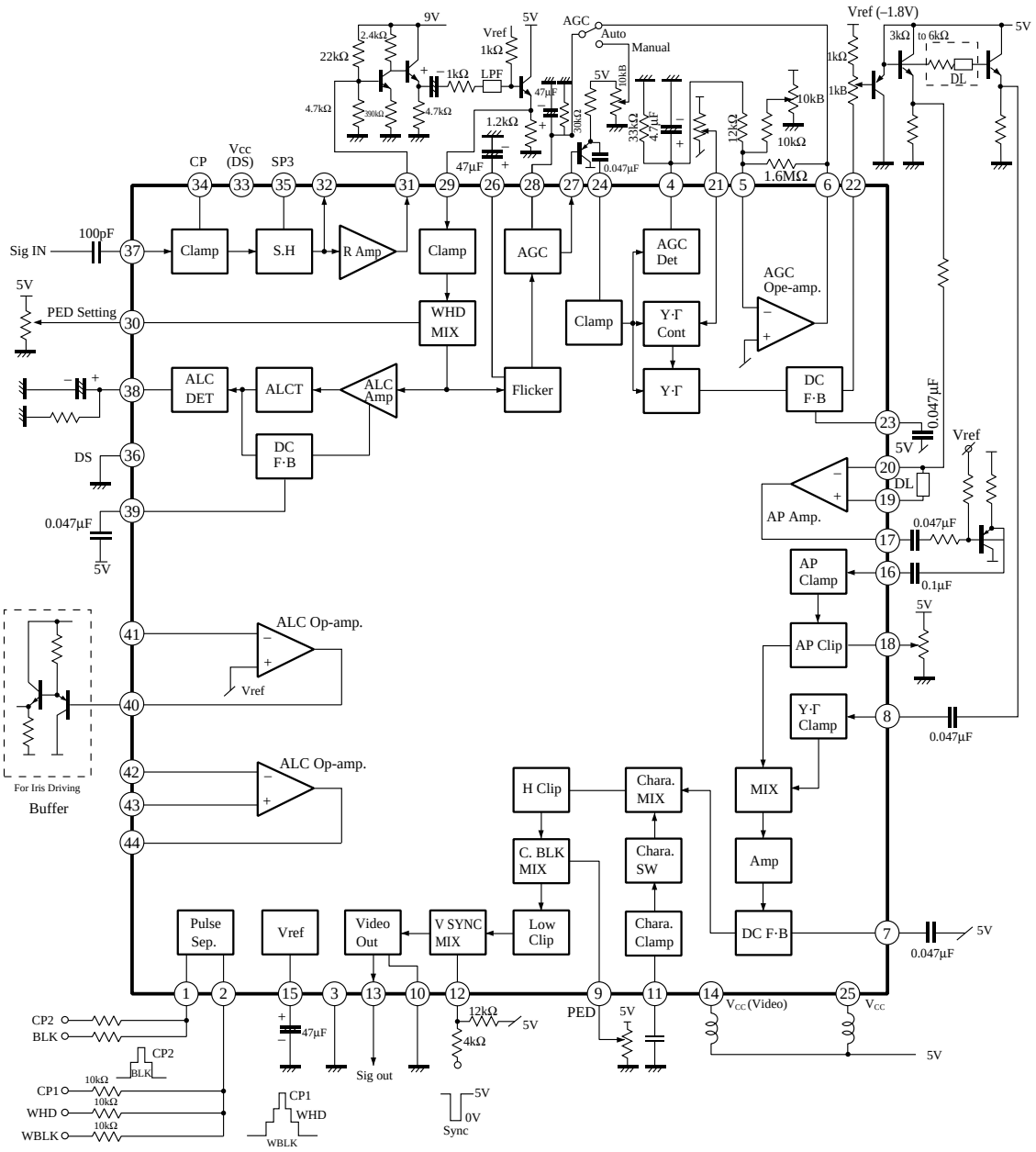

■ Pin Descriptions

Pin No.	Pin name	Typ. waveform	Pin No.	Pin name	Typ. waveform
1	Pulse input 1	5V, 2.5V, CP2, BLK	23	DC control	———
2	Pulse input 2	5V, 3.3V, 1.6V, CP1, WHD, WBL	24	γ input	800mV$_{PP}$, 1.8V
3	GND	———	25	V_{CC}	———
4	AGC DET	480mV$_{PP}$	26	Flicker control	Open 1.8V
5	AGC op. amp. input –		27	AGC output	800mV$_{PP}$
6	AGC op. amp. output		28	AGC control	
7	DC control	———	29	AGC input	1.8V, 250mV$_{PP}$
8	Yγ input	320mV$_{PP}$, 2.5V	30	PED setting	———
9	PED		31	DS amp. output	1.8V, 250mV$_{PP}$
10	GND	———	32	DC output	———
11	Character input	1.8V, Clamp IN	33	V_{CC} (DS)	———
12	SYNC input		34	Clamp pulse input	100ns, 5V, 0V
13	Video output	2V$_{PP}$	35	Sample hold pulse input	100ns, 5V, 0V
14	V_{CC} (Video)	———	36	GND (DS)	———
15	V_{ref}	DC 1.8V	37	DS input	Reset pulse, Signal
16	Aperture input	2.5V	38	ALC DET	580mV$_{PP}$
17	Aperture amp. output	———	39	DC control	———
18	Aperture clip	———	40	ALC op. amp. output	
19	Aperture amp. input +		41	ALC op. amp. input –	
20	Aperture amp. input –		42	ALC op. amp. input –	
21	γ control	———	43	ALC op. amp. input +	
22	γ output	350mV$_{PP}$, 1.8V	44	ALC op. amp. output	———