AN5262N

Preamplifier-Incorporated Volume IC for TV (1-channel)

■ Overview

The AN5262N is an IC for sound volume control of TV set. It incorporates a DC-voltage controlled volume which has a linear characteristic to hearing sensation, sound preamplifiers and a mute function.

■ Features

- Volume maximum attenuation = 95 dB
- Built-in preamplifier (G_V = 22 dB)
- Maximum output voltage = 2.9 V[rms]
- Operating supply voltage range; 8 V to 12 V

■ Applications

- TV

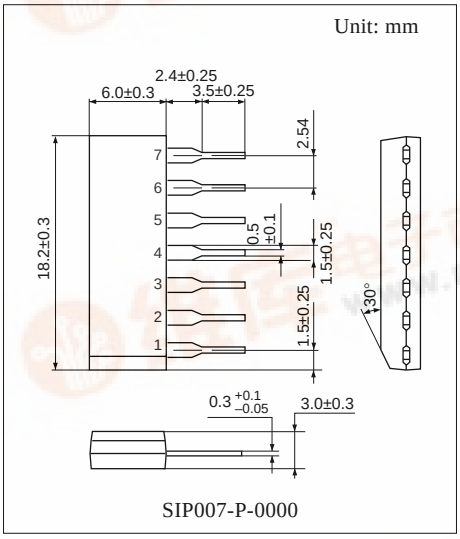

■ Block Diagram

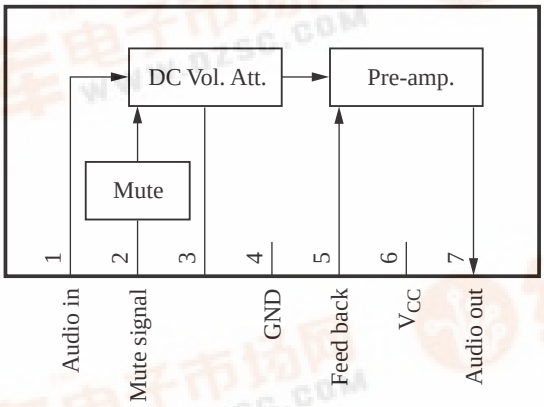

■ Pin Description

Pin No.	Description
1	Sound input
2	Mute signal input
3	Sound adjustment
4	Grounding
5	Feedback input
6	Power supply
7	Sound output

■ Absolute Maximum Ratings

Parameter	Symbol	Rating	Unit
Supply voltage	V_{CC}	12	V
Circuit voltage	$V_{2\text{-}4}$	0 to 7	V
	$V_{3\text{-}4}$	0 to $V_{6\text{-}4}$	
Supply current	I_{CC}	18	mA
Circuit current	I_2	–10 to +5	mA
	I_3	–10 to +3	
	I_5	–5 to +1	
	I_7	–20 to +0.3	
Power dissipation *2	P_D	216	mW
Operating ambient temperature *1	T_{opr}	–20 to +70	°C
Storage temperature *1	T_{stg}	–55 to +150	°C

Note) 1. Do not apply external currents or voltages to any pins not specifically mentioned.
For circuit currents, '+' denotes current flowing into the IC, and '–' denotes current flowing out of the IC.
2. *1: Except for the operating ambient temperature and storage temperature, all ratings are for T_a = 25°C.
*2: T_a = 70°C

■ Recommended Operating Range

Parameter	Symbol	Range	Unit
Supply voltage	V_{CC}	8 to 12	V

■ Electrical Characteristics at T_a = 25°C

Parameter	Symbol	Conditions	Min	Typ	Max	Unit
Circuit current	I_6		9	12	15	mA
Pin voltage	V_{1-4}		3.3	4.5	5.7	V
	V_{5-4}		0.7	1.4	1.8	
	V_{7-4}		3.0	4.1	5.2	
Voltage gain	A_{7-4}	f = 1 kHz, V_I = 180 mV[rms] $V_3 = V_{CC}$	19.5	22.0	23.5	dB
Mute operating voltage	V_{2-4}	f = 1 kHz, V_I = 180 mV[rms] $V_3 = V_{CC}$, $V_O \leq 0.6$ mV[rms]	2.45	2.7	2.95	V
Maximum attenuation amount	A_{tt}	f = 1 kHz, V_I = 180 mV[rms] the ratio at $V_3 = V_{CC}$ to at V_3 = 0 V	72	95	—	dB
Harmonic distortion rate	THD	f = 1 kHz, V_I = 180 mV[rms] $V_3 = V_{CC}$	—	0.3	1.0	%
Maximum undistorted power output	V_O	f = 1 kHz $V_3 = V_{CC}$ at THD = 10%	2.6	2.9	3.2	V[rms]

■ Application Circuit Example