AN5277

Dual Channel SEPP Power Amplifier

■ Overview

The AN5277 is a monolithic integrated circuit designed for 10.0 W (26 V, 8 Ω)output audio power amplifier. It is a dual channel SEPP IC suitable for stereo operation in TV application.

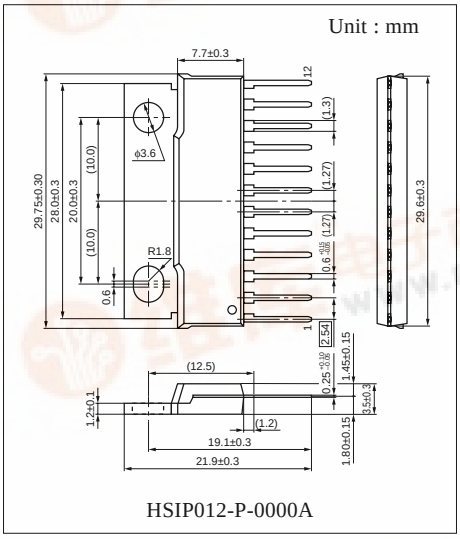

■ Features

- Few external components :
  - No Boucherot cells(output C, R)
  - No Bootstrap Capacitors
  - No Negative Feedback Capacitors
- Built-in muting circuit
- Built-in standby circuit
- Built-in various protection circuits (Load-short, thermal, over-voltage and current)
- High ripple rejection(55 dB)
- Compatible with AN5275, AN5276
- Operating voltage range 10 ~ 32 V(26 V typ.)

■ Applications

- TV

■ Block Diagram

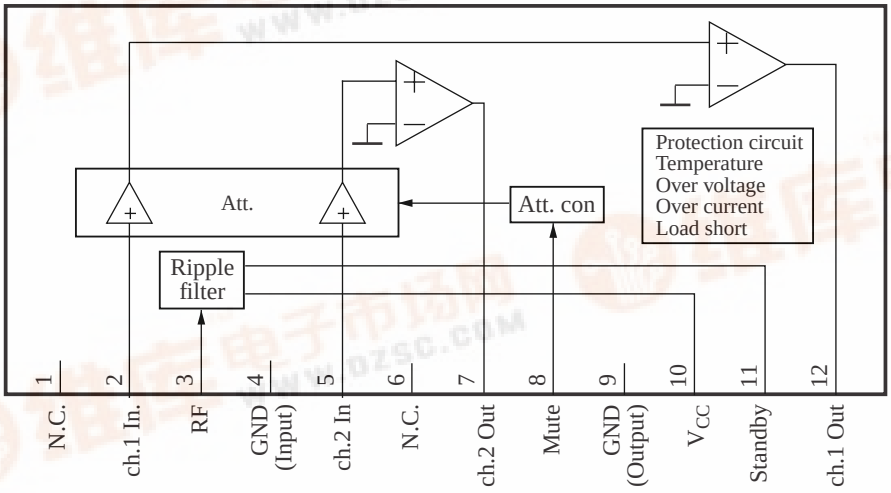

■ Pin Descriptions

Pin No.	Description	Pin No.	Description
1	N.C.	7	ch.2 Output
2	ch.1 Input	8	Mute
3	Ripple Filter	9	Output GND
4	Input GND	10	V_{CC}
5	ch.2 Input	11	Standby
6	N.C.	12	ch.1 Output

■ Absolute Maximum Ratings

Parameter	Symbol	Ratings	Unit
Supply voltage	V_{CC}	35.0	V
Supply current	I_{CC}	4.0	A
Power dissipation *2	P_D	37.5	W
Operating ambient temperature *1	T_{opr}	–25 to +75	°C
Storage temperature *1	T_{stg}	–55 to +150	°C

Note) *1 : T_a = 25 °C except operating ambient temperature and storage temperature.
*2 : At T_a = 70 °C.

■ Recommended Operating Range

Parameter	Symbol	Range	Unit
Supply voltage	V_{CC}	10.0 to 32.0	V

■ Electrical Caracteristics at V_{CC} = 26 V, R_L = 8 Ω, f = 1 kHz, T_a = 25 °C

Parameter	Symbol	Conditions	Min	Typ	Max	Unit
Quiescent current	I_{CQ}	V_{IN} = 0 mV	—	40	80	mA
Output end noise voltage *1	V_{NO}	No input,R_G = 10 k	—	0.22	0..4	mV
Voltage gain	G_V	V_{IN} = 57 mV	32	34	36	dB
Total harmonic distortion *1	THD	V_{IN} = 57 mV	—	0.2	0.4	%
Maximum output power	P_O	V_{CC} = 26 V,THD = 10 %	8.0	10.0	—	W
Ripple rejection ratio *1	RR	V_R = 1 Vrms,f_R = 120 Hz, R_G = 10 kΩ,	45	55	—	dB
Channel balance	CB	V_{IN} = 57 mV	–1.0	0	1.0	dB
Muting ratio	MR	V_{IN} = 57 mV	70	80	—	dB
Muting control voltage	V_{MUTE}	V_{IN} = 57 mV, MR≥70 dB	3.0	—	—	V
Standby control voltage 'on'	V_{STDON}	No input, I_{CC}≤0.1 mA	—	—	5.0	V
Standby control voltage 'off'	V_{STDOFF}	No input, I_{CC}≥20 mA	8.5	—	—	V
Channel crosstalk	CT	V_{IN} = 57 mV,R_G = 10 kΩ	50	60	—	dB

Note) *1 : For this measurement, use the 20 Hz to 20 kHz(12 dB/OCT) filter.

■ Terminal Equivalent Circuit

Pin No.	Equivalent Circuit	Description	DC Voltage
1	—	Not connected	—
2	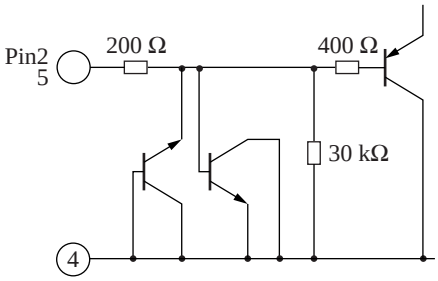	ch.1 Input : This is the amplifier input pins.	0 V
3	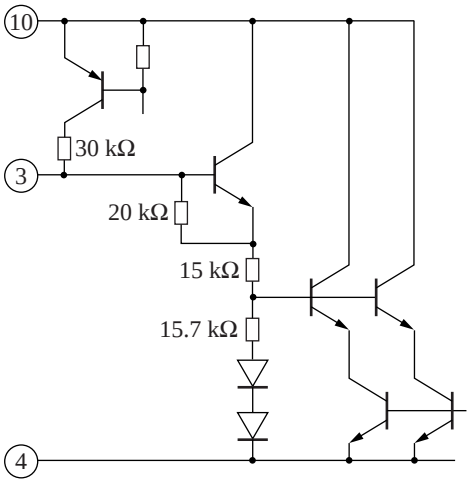	Ripple Filter : This is the pin to connect the positive terminal of a ripple filter capacitor.	$V_{CC} - 1.5\ V_{BE}$
4	—	Input GND : Input ground pin.	0 V
5	Refer to Pin2	ch.2 Input : This is the amplifier input pins.	—
6	—	Not connected	—
7	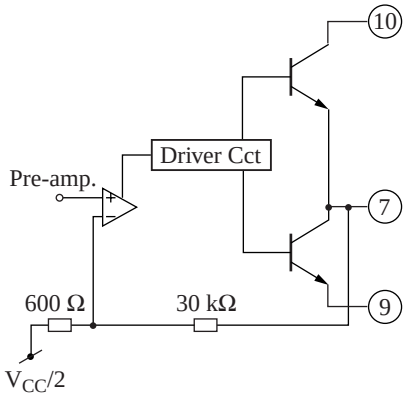	ch.2 Output : ch.2 output pin	$V_{CC}/2$

■ Pin Equivalent Circuit (continued)

Pin No.	Equivalent Circuit	Description	DC Voltage
8	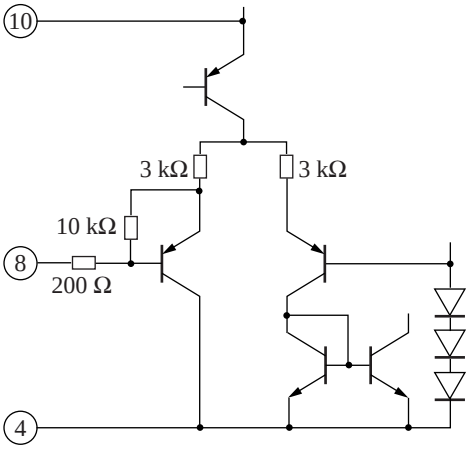	Mute : Mute input pin. Mute 'On' = 5 V Mute 'Off' = 0 V	—
9	—	Output GND : ch.1 & ch.2 output ground.	0 V
10	—	V_{CC} : This is the power supply pin.	typ. : 26 V
11	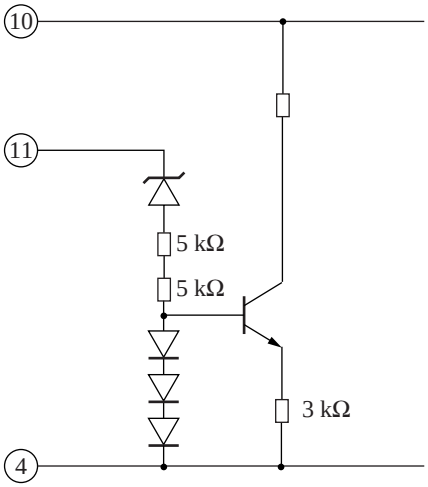	Standby : This is the standby control pin.	—
12	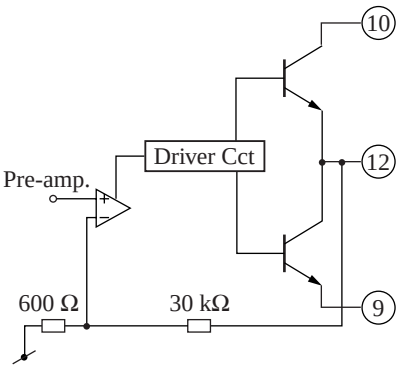	ch.1 Output : ch.1 output pin	$V_{CC}/2$

■ Application Circuit Example

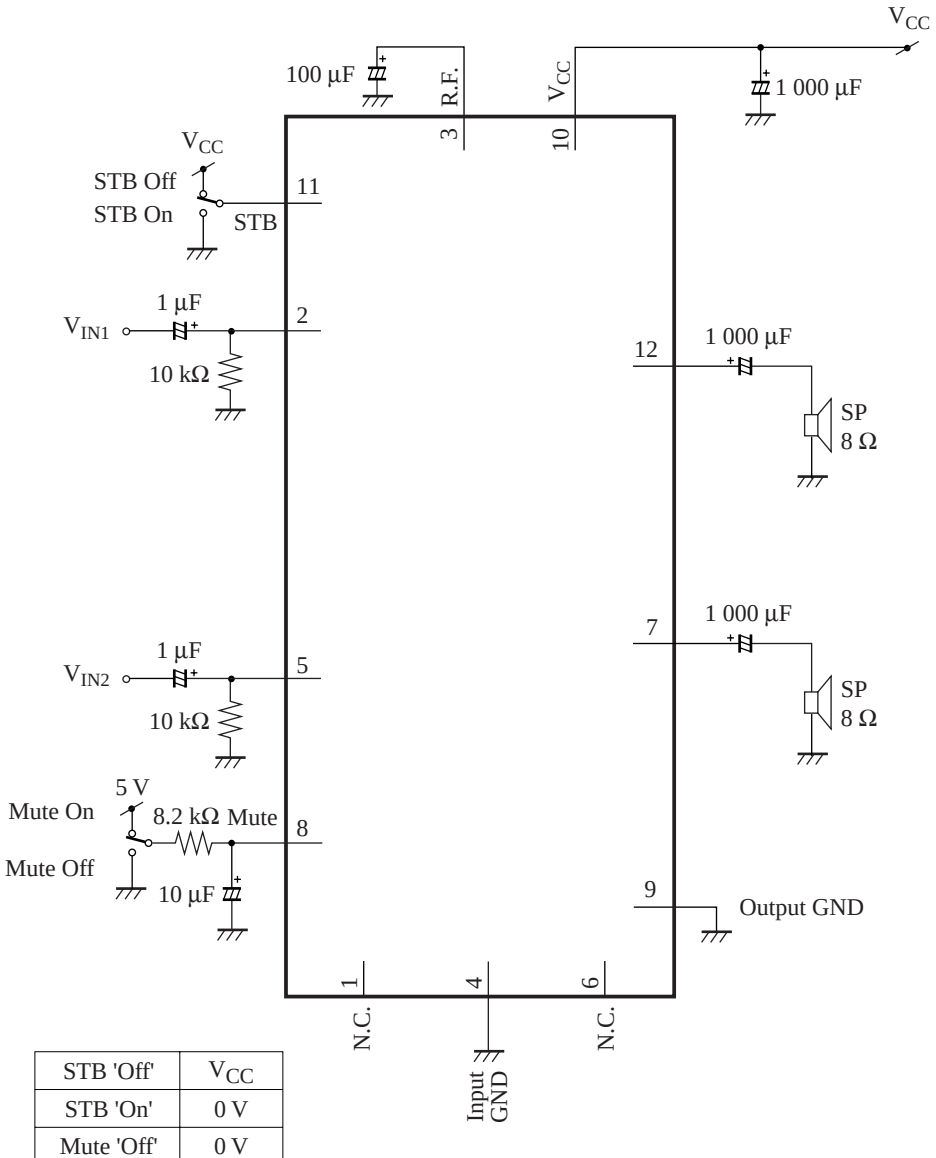

STB 'Off'	V_{CC}
STB 'On'	0 V
Mute 'Off'	0 V
Mute 'On'	5 V

■ Usage Notes

1. External heatsink is needed when used. External heatsink should be fixed to the chassis.
2. Fin of the IC can be connected to GND.
3. Please prevent output to V_{CC} short and output toGND short.
4. Load short protection will only prevent the IC from damaging if operating V_{CC}<30 V
5. The temperature protection circuit will operate at Tj around 150 °C.
   However, if temperature decrease, the protection circuit will automatically be deactivated and resume normal operation.

■ Technical Information

- P_D — T_a Curves of HSIP012-P-0000A

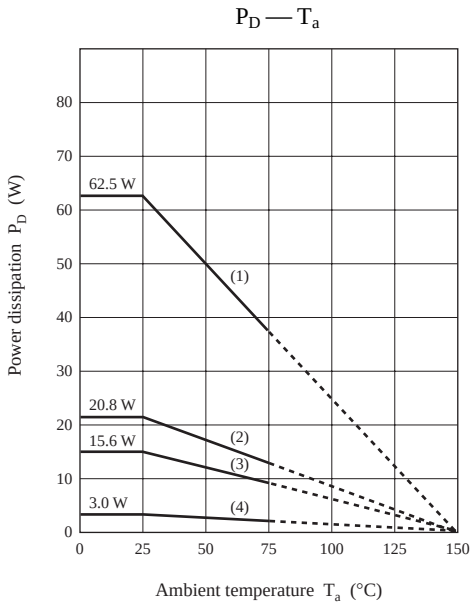

1. $T_C = T_a$,62.5 W($\theta_{j\text{-}c}$ = 2 °C/W)
2. 20.83 W(θ_f = 4.0 °C/W)
   With a 100 cm^2 X 3 mm Al heat sink(black colour coated)or a 200 cm^2 X 2 mm Al heat sink(not lacquered)
3. 15.63 W(θ_f = 6.0 °C/W)
   With a 100 cm^2 X 2 mm Al heat sink(not lacquered)
4. 3.0 W at T_a = 25 °C($\theta_{j\text{-}a}$ = 42 °C/W)
   Without heat sink