AN5521

TV Vertical Deflection Output IC

Overview

The AN5521 is an integrated circuit designed for TV vertical deflection output circuit. Combining with the deflection-signal processing IC, the vertical output circuit design becomes easy.

Features

- Low power cosumption, direct deflection coil driving capability (Flyback voltage of two times as high as supply voltage is applied during only flyback period)
- High breakdown voltage : 60V

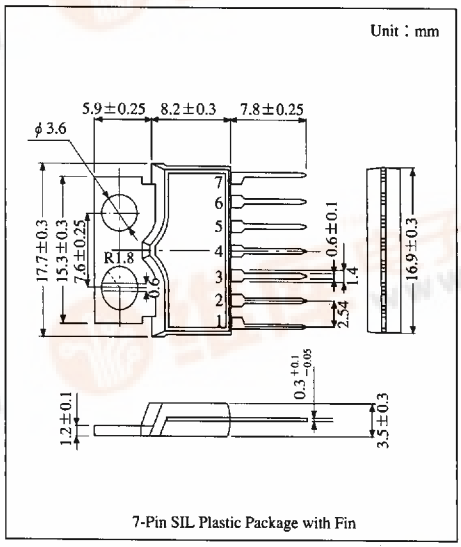

7-Pin SIL Plastic Package with Fin

Pin Descriptions

Pin No.	Pin name
1	GND
2	Output
3	Supply voltage for output
4	Input
5	Trigger pulse input
6	Pulse amp. output
7	V_{CC}

Block Diagram

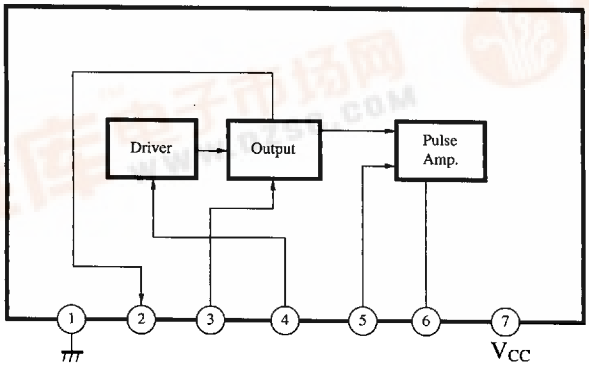

■ Absolute Maximum Ratings (Ta=25℃)

Parameter		Symbol	Rating		Unit
Voltage	Supply voltage	V_{CC}	30		V
	Circuit voltage	V_{3-1}	0	60	V
		V_{4-1}	−1	6	V
		V_{5-1}	−1	3	V
Current	Supply current	I_{CC}	360		mA
	Circuit current	I_2	−1800	1800	mA_{O-P}
		I_6	−1800	1800	mA_{O-P}
Power dissipation		P_D	8		W
Temperature	Operating ambient temperature	T_{opr}	−20 to +70		℃
	Storage temperature	T_{stg}	−55 to +150		℃

■ Electrical Characteristics (Ta=25℃)

Parameter	Symbol	Condition	min	typ	max	Unit
Deflection current	$I_{y(P-P)}$		1700	1800	1900	mA_{P-P}
Deflection current linearity	$\Delta I_{y(+)}$		59	—	175	mA_{P-P}
Deflection current linearity	$\Delta I_{y(-)}$		54	—	162	mA_{P-P}
Deflection current change with ambient temperature *	$\Delta I_y/T_a$	T_a=−20 to +70℃	−1.5	—	1.5	%
Center voltage	V_{MID}		13.2	13.8	14.4	V
Flyback pulse amplitude	$V_{(FBP)}$		47	—	—	V
Static circuit current	I_{CQ}	V_{3-1}=24V V_{7-1}=24V V_{5-1}=0 ② 12kΩ 7.5kΩ ④ 910Ω	7	15	30	mA
Output Tr saturation voltage	V_{3-2}	$V_{3-1}=V_{7-1}$=24V, Pin②-①=33Ω V_{4-1}=0.3V, V_{5-1}=0	—	3.0	4.0	V
Output Tr Saturation voltage	V_{2-1}	$V_{3-1}=V_{7-1}$=24V, Pin②-③=33Ω V_{4-1}=1.3V, V_{5-1}=0	—	1.3	2.0	V
Q_{21} saturation voltage	V_{6-1}	V_{7-1}=24V, Pin⑦-⑥=1.2kΩ V_{5-1}=0	—	—	0.5	V
Thermal resistance	$R_{th(j-c)}$		—	—	4	℃/W

* Reference value for design

■ Application Circuit