查询AN5766供应商 捷多邦，专业PCB打样工厂，24小时加急出货

intersil

CA3020, CA3020A

8MHz Power Amps For Military, Industrial and Commercial Equipment

April 1997

Features

- High Power Output Class B Amplifier
  - CA3020 . . . . . 0.5W (Typ) at V_{CC} = 9V
  - CA3020A . . . . . 1.0W (Typ) at V_{CC} = 12V
- Wide Frequency Range . . Up to 8MHz with Resistive Loads
- High Power Gain. . . . . 75dB (Typ)
- Single Power Supply For Class B Operation With Transformer
  - CA3020 . . . . . 3V to 9V
  - CA3020A . . . . . 3V to 12V
- Built-In Temperature-Tracking Voltage Regulator Provides Stable Operation Over -55°C to 125°C Temperature Range

Applications

- AF Power Amplifiers For Portable and Fixed Sound and Communications Systems
- Servo-Control Amplifiers
- Wide-Band Linear Mixers
- Video Power Amplifiers
- Transmission-Line Driver Amplifiers (Balanced and Unbalanced)
- Fan-In and Fan-Out Amplifiers For Computer Logic Circuits
- Lamp-Control Amplifiers
- Motor-Control Amplifiers
- Power Multivibrators
- Power Switches

Description

The CA3020 and CA3020A are integrated-circuit, multi-stage, multipurpose, wide-band power amplifiers on a single monolithic silicon chip. They employ a highly versatile and stable direct coupled circuit configuration featuring wide frequency range, high voltage and power gain, and high power output. These features plus inherent stability over a wide temperature range make the CA3020 and CA3020A extremely useful for a wide variety of applications in military, industrial, and commercial equipment.

The CA3020 and CA3020A are particularly suited for service as class B power amplifiers. The CA3020A can provide a maximum power output of 1W from a $12V_{DC}$ supply with a typical power gain of 75dB. The CA3020 provides 0.5W power output from a 9V supply with the same power gain.

Refer to AN5766 for application information.

Ordering Information

PART NUMBER	TEMP. RANGE (°C)	PACKAGE	PKG. NO.
CA3020	-55 to 125	12 Pin Metal Can	T12.B
CA3020A	-55 to 125	12 Pin Metal Can	T12.B

Pinout

CA3020
(METAL CAN)
TOP VIEW

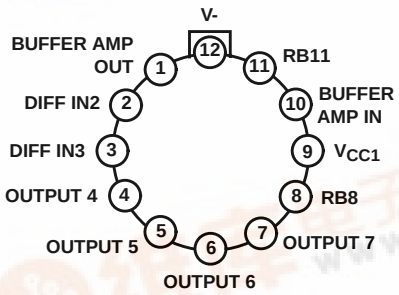

Schematic Diagram

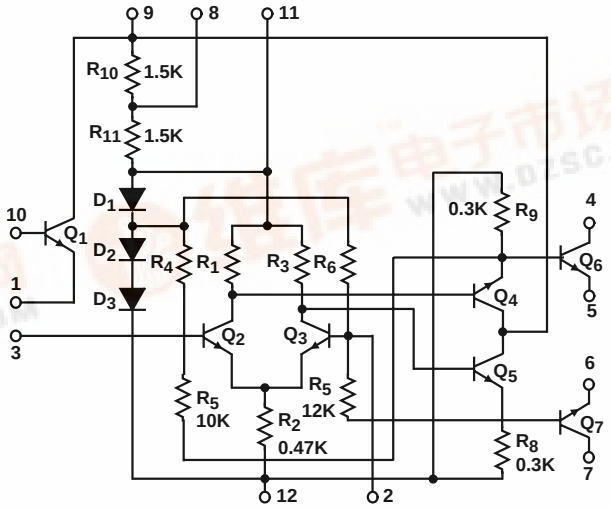

The resistance values included on the schematic diagram have been supplied as a convenience to assist Equipment Manufacturers in optimizing the selection of "outboard" components of equipment designs. The values shown may vary as much as 30%.

Intersil reserves the right to make any changes in the Resistance Values provided such changes do not adversely affect the published performance characteristics of the device.

找PDF 维库一下 pdf.dzsc.com

Absolute Maximum Ratings

Maximum Pin 9 Supply Voltage, V_{CC1} (Note 1)
- CA3020 . . . . . 10V
- CA3020A. 12V

Maximum Pin 9 Supply Current, I_{CC1} 20mA
Maximum Pin 11 Sink Current, I_{11} 20mA
Output Voltage, V_4 and V_7 (Note 1)
- CA3020 . . . . . 25V
- CA3020A. 18V

Output Current, I_O 300mA
Input Voltage Range, V_2, V_3. . . . . -2V to 2V
Maximum Input Voltage, V_{10} (Ref to Pin 1) . . . . . -3V
Maximum Source Current, V_1 . . . . . 1mA

Operating Conditions

Temperature Range . . . . . -55°C to 125°C

Thermal Information

Thermal Resistance (Typical, Note 2)	θ_{JA} (°C/W)	θ_{JC} (°C/W)
Metal Can Package	165	80

Maximum Junction Temperature (Metal CanPackage). . . . . 175°C
Maximum Storage Temperature Range . . . . . -65°C to 150°C
Maximum Lead Temperature (Soldering 10s) . . . . . 300°C

CAUTION: Stresses above those listed in "Absolute Maximum Ratings" may cause permanent damage to the device. This is a stress only rating and operation of the device at these or any other conditions above those indicated in the operational sections of this specification is not implied.

NOTES:

1. The voltage ratings for Pin 9, Pin 4 and Pin 7 are referenced to the V- (Pin 12). A normal bias configuration for Pin 8 and Pin 11 is shown in Figure 1B. Refer to Application Note AN5766 for other options.
2. θ_{JA} is measured with the component mounted on an evaluation PC board in free air.

Electrical Specifications $T_A = 25°C$

PARAMETER	SYMBOL	TEST CONDITIONS: CIRCUIT AND PROCEDURE FIGURE	TEST CONDITIONS: DC SUPPLY VOLTAGE V_{CC1}	TEST CONDITIONS: DC SUPPLY VOLTAGE V_{CC2}	CA3020 MIN	CA3020 TYP	CA3020 MAX	CA3020A MIN	CA3020A TYP	CA3020A MAX	UNITS
Collector-to-Emitter Breakdown Voltage, Q_6 and Q_7 at 10mA	$V_{(BR)CER}$	1A	-	-	18	-	-	25	-	-	V
Collector-to-Emitter Breakdown Voltage, Q_1 at 0.1mA	$V_{(BR)CEO}$	-	-	-	10	-	-	10	-	-	V
Idle Currents, Q_6 and Q_7	I_4 IDLE I_7 IDLE	7	9.0	2.0	-	5.5	-	-	5.5	-	mA
Peak Output Currents, Q_6 and Q_7	I_4PK I_7PK	7	9.0	2.0	140	-	-	180	-	-	mA
Cutoff Currents, Q_6 and Q_7	I_4 CUTOFF I_7 CUTOFF	7	9.0	2.0	-	-	1.0	-	-	1.0	mA
Differential Amplifier Current Drain	I_{CC1}	7	9.0	9.0	6.3	9.4	12.5	6.3	9.4	12.5	mA
Total Current Drain	I_{CC1} + I_{CC2}	7	9.0	9.0	8.0	21.5	35.0	14.0	21.5	30.0	mA
Differential Amplifier Input Terminal Voltages	V_2 V_3	7	9.0	2.0	-	1.11	-	-	1.11	-	V
Regulator Terminal Voltage	V_{11}	7	9.0	2.0	-	2.35	-	-	2.35	-	V
Q_1 Cutoff (Leakage) Currents: Collector-to-Emitter	I_{CEO}	-	10.0	-	-	-	100	-	-	100	µA
Emitter-to-Base	I_{EBO}		3.0	-	-	-	0.1	-	-	0.1	µA
Collector-to-Base	I_{CBO}		3.0	-	-	-	0.1	-	-	0.1	µA
Forward Current Transfer Ratio, Q_1 at 3mA	h_{FE1}	-	6.0	-	30	75	-	30	75	-	
Bandwidth at -3dB Point	BW	8	6.0	6.0	-	8	-	-	8	-	MHz
Maximum Power Output for R_{CC} = 130Ω	$P_{O(MAX)}$	9	6.0	6.0	200	300	-	200	300	-	mW
		9	9.0	9.0	400	550	-	400	550	-	mW
Maximum Power Output for R_{CC} = 200Ω		9	9.0	12.0	-	-	-	800	1000	-	mW
Sensitivity for P_{OUT} = 400mW, R_{CC} = 130Ω	e_{IN}	9	9.0	9.0	-	35	55	-	-	-	mV
Sensitivity for P_{OUT} = 800mW, R_{CC} = 200Ω	e_{IN}	9	9.0	12.0	-	-	-	-	50	100	mV
Input Resistance - Terminal 3 to Ground	R_{IN3}	10	6.0	6.0	-	1000	-	-	1000	-	Ω

Typical Performance Data (Note 3) A heat sink is recommended for high ambient temperature operation.

PARAMETER		SYMBOL	CA3020	CA3020A	UNITS
Power Supply Voltage		V_{CC1}	9.0	9.0	V
		V_{CC2}	9.0	12.0	V
Zero Signal Current	Differential Amplifier	I_{CC1}	15	15	mA
	Output Amplifier	I_{CC2}	24	24	mA
Maximum Signal Current	Differential Amplifier	I_{CC1}	16	16.6	mA
	Output Amplifier	I_{CC2}	125	140	mA
Maximum Power Output at THD = 10%		PO	550	1000	mW
Sensitivity		e_{IN}	35	45	mV
Power Gain		G_P	75	75	dB
Input Resistance		R_{IN}	55	55	kΩ
Efficiency		η	45	55	%
Signal-to-Noise Ratio		S/N	70	66	dB
THD at 150mW Level			3.1	3.3	%
Test Signal Frequency from 600Ω Generator			1000	1000	Hz
Equivalent Collector-to-Collector Load Resistance		R_{CC}	130	200	Ω

NOTE:

3. Refer to Figures 7 through 11 for measurement and symbol information.

Test Circuits and Waveforms

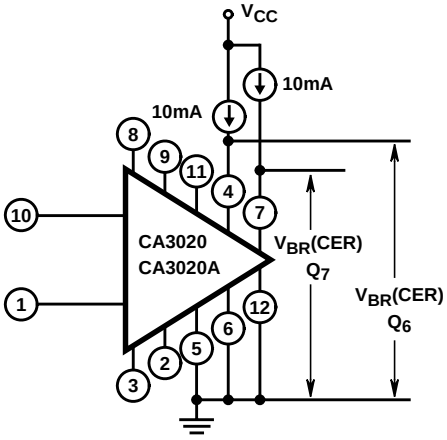

FIGURE 1A. COLLECTOR-TO-EMITTER BREAKDOWN VOLTAGE (Q_6 AND Q_7) CIRCUIT

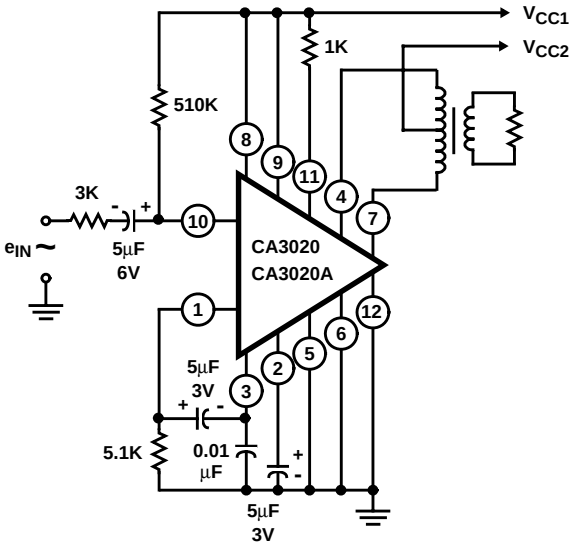

FIGURE 1B. TYPICAL AUDIO AMPLIFIER CIRCUIT UTILIZING THE CA3020 OR CA3020A AS AN AUDIO PREAMPLIFIER AND CLASS B POWER AMPLIFIER

FIGURE 1.

Test Circuits and Waveforms (Continued)

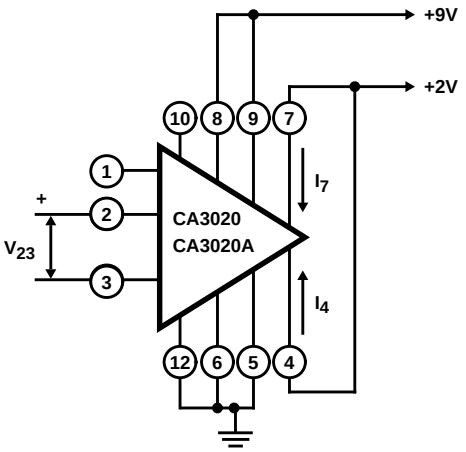

FIGURE 2A. TEST SETUP

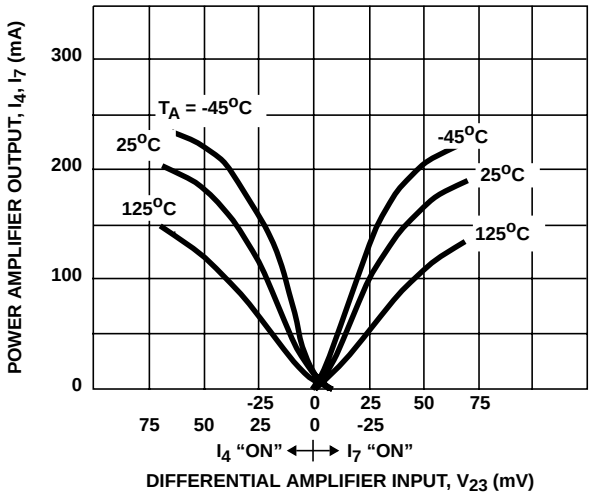

FIGURE 2B. CHARACTERISTICS WITH R_{10} SHORTED OUT

FIGURE 2. TYPICAL TRANSFER CHARACTERISTICS

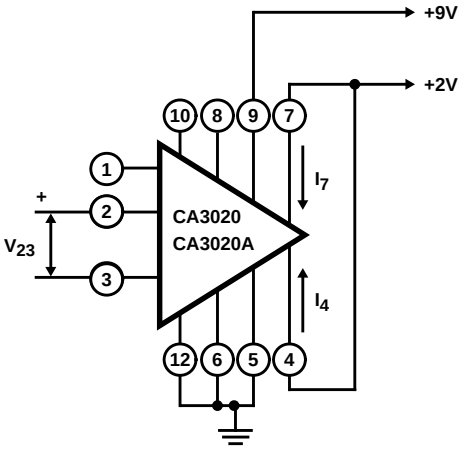

FIGURE 3A. TEST SETUP

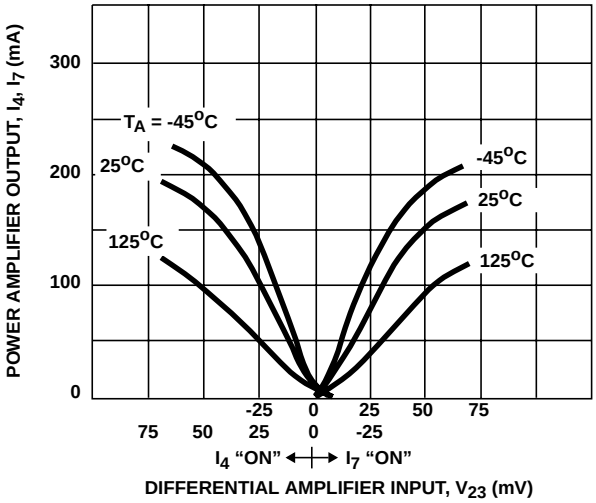

FIGURE 3B. CHARACTERISTIC WITH R_{10} IN CIRCUIT

FIGURE 3. TYPICAL TRANSFER CHARACTERISTICS

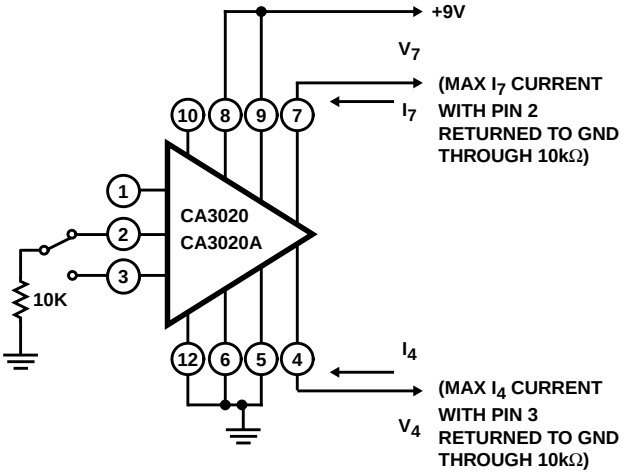

FIGURE 4A. TEST SETUP

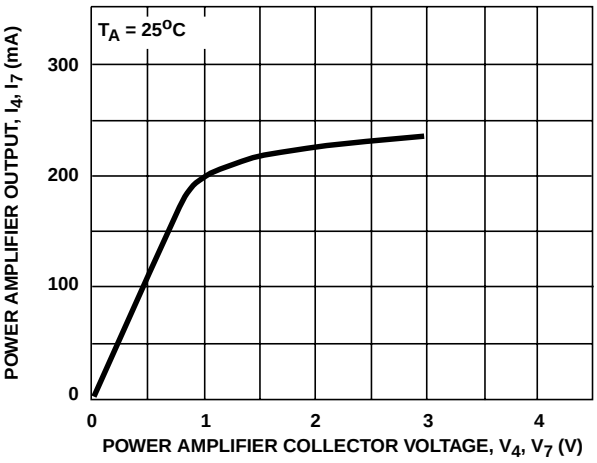

FIGURE 4B. CHARACTERISTIC

FIGURE 4. "MINIMUM DRIVE" TYPICAL CURRENT-VOLTAGE SATURATION CURVE

Test Circuits and Waveforms (Continued)

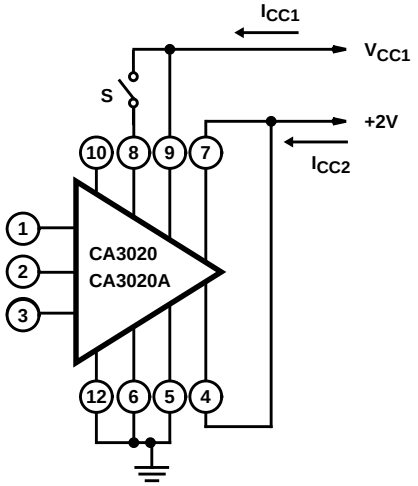

FIGURE 5A. TEST SETUP

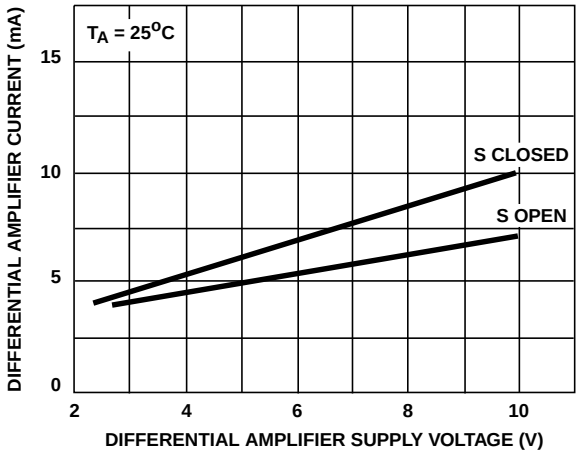

FIGURE 5B. DIFFERENTIAL AMPLIFIER CHARACTERISTICS OF I_{CC1} CURRENT vs V_{CC1} VOLTAGE

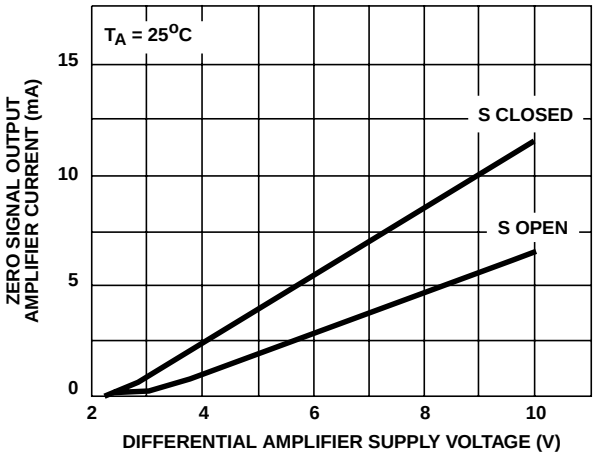

FIGURE 5C. OUTPUT AMPLIFIER CHARACTERISTICS OF I_{CC2} CURRENT vs V_{CC1} VOLTAGE

FIGURE 5. ZERO SIGNAL AMPLIFIER CURRENT vs DIFFERENTIAL AMPLIFIER SUPPLY VOLTAGE

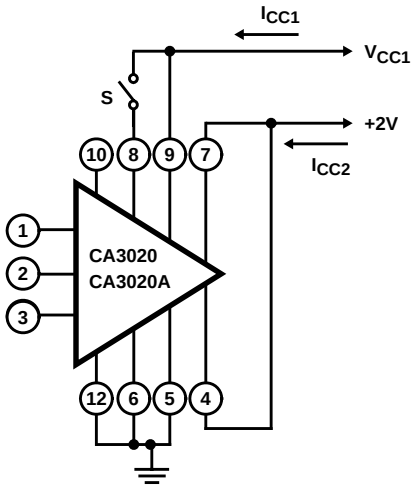

FIGURE 6A. TEST SETUP

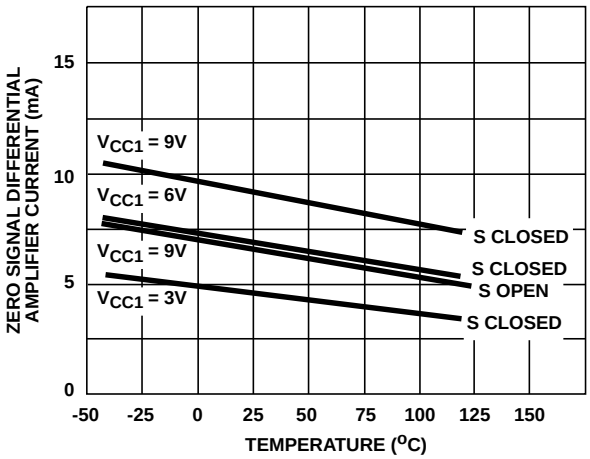

FIGURE 6B. DIFFERENTIAL AMPLIFIER CHARACTERISTICS OF I_{CC1} CURRENT vs AMBIENT TEMPERATURE

FIGURE 6. ZERO SIGNAL AMPLIFIER CURRENT vs AMBIENT TEMPERATURE

Test Circuits and Waveforms (Continued)

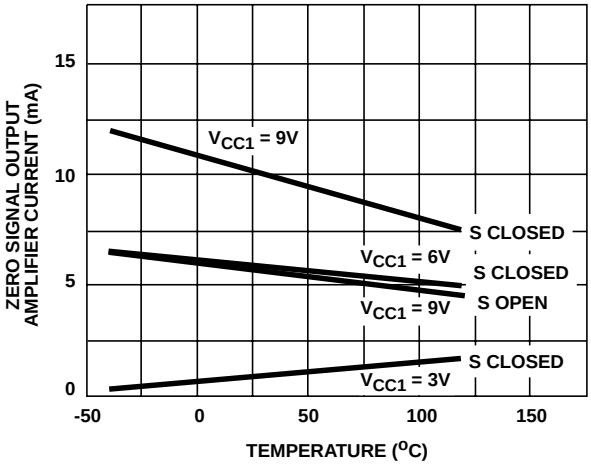

FIGURE 6C. OUTPUT AMPLIFIER CHARACTERISTICS OF I_{CC2} CURRENT vs AMBIENT TEMPERATURE

FIGURE 6. ZERO SIGNAL AMPLIFIER CURRENT vs AMBIENT TEMPERATURE

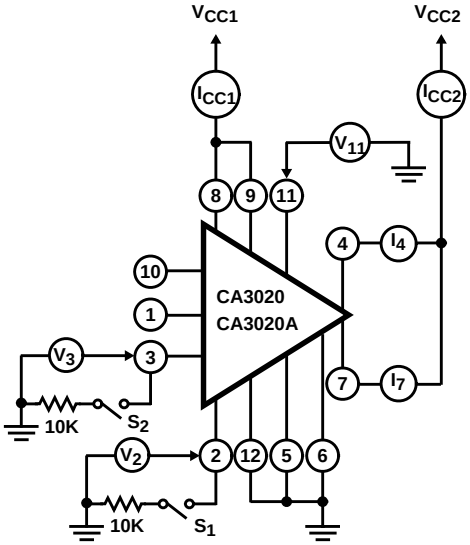

CURRENTS OR VOLTAGES	S_1	S_2
I_4 -IDLE	OPEN	OPEN
I_7 -IDLE	OPEN	OPEN
I_4 -PEAK	OPEN	CLOSE
I_7 -PEAK	CLOSE	OPEN
I_4 -CUTOFF	CLOSE	OPEN
I_7 -CUTOFF	OPEN	CLOSE

CURRENTS OR VOLTAGES	S_1	S_2
I_{CC1}	OPEN	OPEN
I_{CC2}	OPEN	OPEN
V_2	OPEN	OPEN
V_3	OPEN	OPEN
V_{11}	OPEN	OPEN

FIGURE 7. STATIC CURRENT AND VOLTAGE TEST CIRCUIT

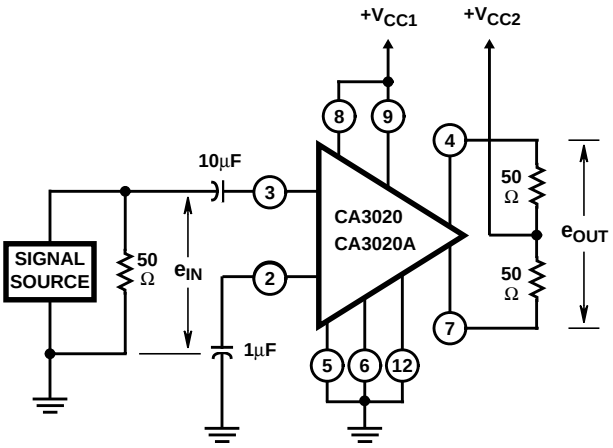

PROCEDURES:

1. Apply desired value of V_{CC1} and V_{CC2}.
2. Apply 1kHz input signal and adjust for $e_{IN} = 5mV_{RMS}$.
3. Record the resulting value of e_{OUT} in dB (reference value).
4. Vary input-signal frequency, keeping e_{IN} constant at 5mV, and record frequencies above and below 1kHz at which e_{OUT} decreases 3dB below reference value.
5. Record bandwidth as frequency range between -3dB points.

FIGURE 8. MEASUREMENT OF BANDWIDTH AT -3dB POINTS

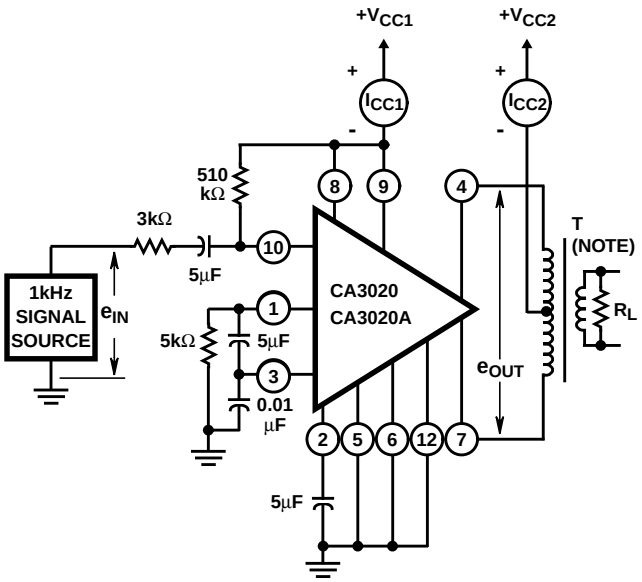

NOTE: Push-pull output transformer; load resistance (R_L) should be selected to provide indicated collector-to-collector load impedance (R_{CC}).

PROCEDURES:

1. Apply desired value of V_{CC1} and V_{CC2} and reduce e_{IN} to 0V.
2. Record resulting values of I_{CC1} and I_{CC2} in mA as Zero-Signal DC Current Drain.
3. Apply desired value of V_{CC1} and V_{CC2} and adjust e_{IN} to the value at which the Total Harmonic Distortion in the output of the amplifier = 10%.
4. Record resulting value of I_{CC1} and I_{CC2} in mA as Maximum Signal DC Current Drain.
5. Determine resulting amplifier power output in watts and record as Maximum Power Output (P_{OUT}).
6. Calculate Circuit Efficiency (η) in % as follows:

$$\eta = 100\frac{P_{OUT}}{V_{CC1}I_{CC1} + V_{CC2}I_{CC2}}.$$

   where P_{OUT} is in watts, V_{CC1} and V_{CC2} are in volts, and I_{CC1} and I_{CC2} are in amperes.
7. Record value of e_{IN} in mV_{RMS} required in Step 3 as Sensitivity (e_{IN}).
8. Calculate Transducer Power Gain (G_p) in dB as follows:

$$G_p = 10\log_{10}\frac{P_{OUT}}{P_{IN}}$$

$$\text{where } P_{IN}(\text{in mW}) = \frac{e_{IN}^2}{3000 + R_{IN(10)(\text{Note 4})}}$$

NOTE:

4. See Figure 10 for definition of $R_{IN(10)}$.

FIGURE 9. MEASUREMENTS OF ZERO-SIGNAL DC CURRENT DRAIN, MAXIMUM-SIGNAL DC CURRENT DRAIN, MAXIMUM POWER OUTPUT, CIRCUIT EFFICIENCY, SENSITIVITY, AND TRANSDUCER POWER GAIN

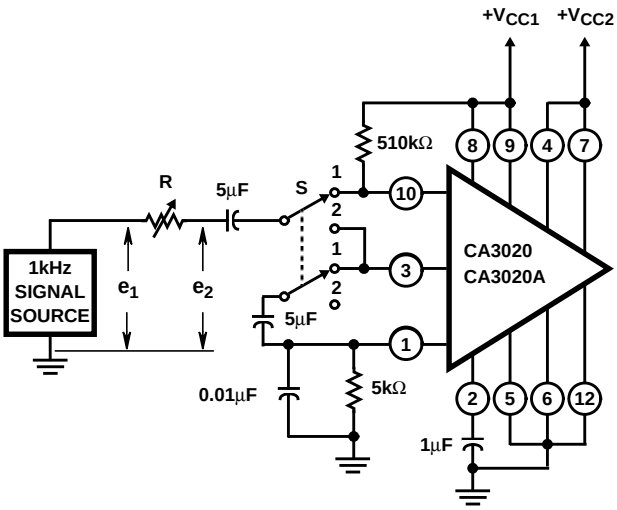

PROCEDURES:

Input Resistance Terminal 10 to Ground (R_{IN10}).

1. Apply desired value of V_{CC1} and V_{CC2} and set S in Position 1.
2. Adjust 1kHz input for desired signal level of measurement
3. Adjust R for $e_2 = e_1/2$.
4. Record resulting value of R as R_{IN10}.

Input Resistance Terminal 3 to Ground (R_{IN3}).

1. Apply desired value of V_{CC1} and V_{CC2} and set S in Position 2.
2. Adjust 1kHz input for desired signal level of measurement
3. Adjust R for $e_2 = e_1/2$.
4. Record resulting value of R as R_{IN3}.

FIGURE 10. MEASUREMENT OF INPUT RESISTANCE

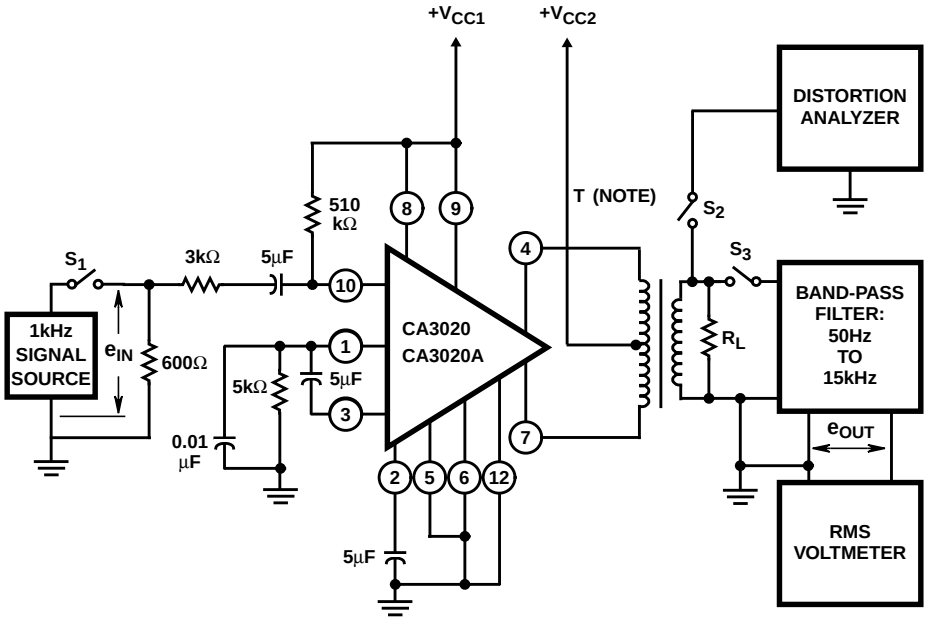

NOTE: Push-pull output transformer; load resistance (R_L) should be selected to provide indicated collector-to-collector load impedance (R_{CC}).

PROCEDURES:

Signal-to-Noise Ratio

1. Close S_1 and S_3; open S_2.
2. Apply desired values of V_{CC1} and V_{CC2}.
3. Adjust e_{IN} for an amplifier output of 150mW and record resulting value of E_{OUT} in dB as e_{OUT1} (reference value).
4. Open S_1 and record resulting value of e_{OUT} in dB as e_{OUT2}
5. Signal-to-Noise Ratio $(S/N) = 20\log_{10}\frac{e_{OUT1}}{e_{OUT2}}$.

Total Harmonic Distortion

1. Close S_1 and S_2; open S_3.
2. Apply desired values of V_{CC1} and V_{CC2}.
3. Adjust e_{IN} for desired level amplifier output power.
4. Record Total Harmonic Distortion (THD) in %.

FIGURE 11. MEASUREMENT OF SIGNAL-TO-NOISE RATIO AND TOTAL HARMONIC DISTORTION

All Intersil semiconductor products are manufactured, assembled and tested under **ISO9000** quality systems certification.

Intersil products are sold by description only. Intersil Corporation reserves the right to make changes in circuit design and/or specifications at any time without notice. Accordingly, the reader is cautioned to verify that data sheets are current before placing orders. Information furnished by Intersil is believed to be accurate and reliable. However, no responsibility is assumed by Intersil or its subsidiaries for its use; nor for any infringements of patents or other rights of third parties which may result from its use. No license is granted by implication or otherwise under any patent or patent rights of Intersil or its subsidiaries.

For information regarding Intersil Corporation and its products, see web site **http://www.intersil.com**

Sales Office Headquarters

NORTH AMERICA
Intersil Corporation
P. O. Box 883, Mail Stop 53-204
Melbourne, FL 32902
TEL: (321) 724-7000
FAX: (321) 724-7240

EUROPE
Intersil SA
Mercure Center
100, Rue de la Fusee
1130 Brussels, Belgium
TEL: (32) 2.724.2111
FAX: (32) 2.724.22.05

ASIA
Intersil (Taiwan) Ltd.
Taiwan Limited
7F-6, No. 101 Fu Hsing North Road
Taipei, Taiwan
Republic of China
TEL: (886) 2 2716 9310
FAX: (886) 2 2715 3029