查询AN5768供应商 捷多邦，专业PCB打样工厂，24小时加急出货

AN5768

TILT correction IC

■ Overview

The AN5768 is a rotation correction (TILT) IC for CRT monitor incorporating a driving transistor. It enables ±250 mA (max.) DC current flow by connecting a coil between the output pins which operate with a reverse phase each other.

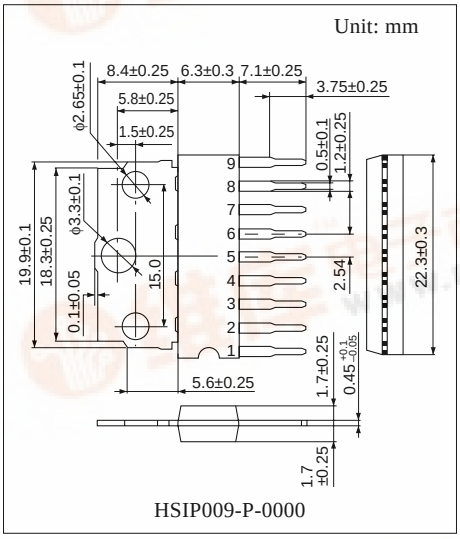

■ Features

- DC control input: 0 V to 5 V
- Output dynamic range: 1.2 V to 3.8 V
- Maximum output current: ±250 mA

■ Applications

- CRT monitors

■ Block Diagram

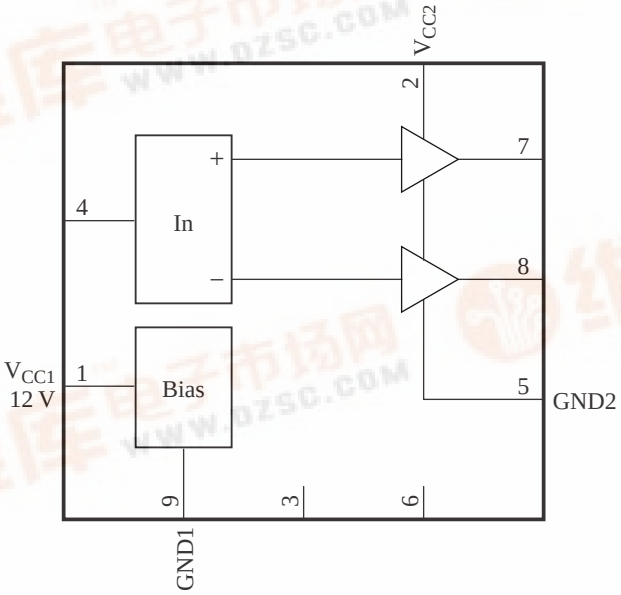

找PDF 维库一下 pdf.dzsc.com

■ Pin Descriptions

Pin No.	Description
1	Supply voltage 12 V (V_{CC1})
2	Output block supply voltage 7 V (V_{CC2}), Protective resistor is needed.
3	N.C.
4	TILT control input
5	Output block GND (GND2)
6	N.C.
7	TILT positive output
8	TILT negative output
9	GND (GND1)

■ Absolute Maximum Ratings

Parameter	Symbol	Rating	Unit
Supply voltage	V_{CC1}	13.5	V
	V_{CC2}	11.05	
Supply current	I_{CC1}	26	mA
	I_{CC2}	250	
Power dissipation *2	P_D	1 128	mW
Operating ambient temperature *1	T_{opr}	–25 to +75	°C
Storage temperature *1	T_{stg}	–55 to +150	°C

Note) 1. ∗1: Except for the operating ambient temperature and storage temperature, all ratings are for T_a = 25°C.
∗2: The power dissipation shown is for the IC package at T_a = 75°C.
2. Pay attention to an electrostatic breakdown for pin 1.
3. Observe the following sequence of the supply power start-up:
- Turn-on sequence First: Pin 2 on (7 V) power supply
  Second: Pin 1 on (12 V) power supply
- Turn-off sequence First: Pin 1 off (12 V) power supply
  Second: Pin 2 off (7 V) power supply

■ Recommended Operating Range

Parameter	Symbol	Range	Unit
Supply voltage	V_{CC1}	10.8 to 13.2	V
	V_{CC2}	6.0 to 9.0	

■ Electrical Characteristics at T_a = 25°C

Parameter	Symbol	Conditions	Min	Typ	Max	Unit
Circuit current 1	I_{CC1}	V_{CC1} = 12 V, V_{CC2} = 7 V	16	20.5	25	mA
Circuit current 2	I_{CC2}	V_{CC1} = 12 V, V_{CC2} = 7 V	—	0	1	mA
Circuit voltage 7	V_{7-5}	V_{CC1} = 12 V, V_{CC2} = 7 V	2.8	3.0	3.2	V
Circuit voltage 8	V_{8-5}	V_{CC1} = 12 V, V_{CC2} = 7 V	2.8	3.0	3.2	V
TILT output voltage 1	E_{T1}	$V_7 - V_8$ at V_4 = 2.5 V	– 0.15	0	+0.15	V
TILT output voltage 2	E_{T2}	$V_7 - V_8$ at V_4 = 5 V	+2.3	+2.5	+2.7	V
TILT output voltage 3	E_{T3}	$V_7 - V_8$ at V_4 = 0 V	–2.7	–2.5	–2.3	V

• Design reference data

Note) The characteristics listed below are theoretical values based on the IC design and are not guaranteed.

Parameter	Symbol	Conditions	Min	Typ	Max	Unit
High-level TILT output fluctuation with supply voltage	$\Delta E_{T/VCCH}$	ΔE when varying V_{CC1} = 12 V → 13.2 V and V_{CC2} = 7 V → 9 V	– 0.1	—	+0.1	V
Low-level TILT output fluctuation with supply voltage	$\Delta E_{T/VCCL}$	ΔE when varying V_{CC1} = 12 V → 10.8 V and V_{CC2} = 7 V → 6 V	– 0.1	—	+0.1	V
TILT output fluctuation with temperature	$\Delta E_{T/Ta}$	ΔE when varying T_a = 25°C → 70°C and T_a = +25°C → –20°C	– 0.1	—	+0.1	V

■ Terminal Equivalent Circuits

Pin No.	Equivalent circuit	Description	DC voltage (V)
1	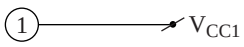	Supply voltage 12 V (V_{CC1}): Supply voltage pin Apply DC 12 V.	12
2	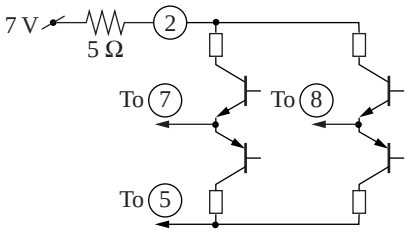	Output block supply voltage 7 V (V_{CC2}): TILT output supply voltage pin Apply DC 7 V via a protection resistor.	7
3	—	N.C.	—
4	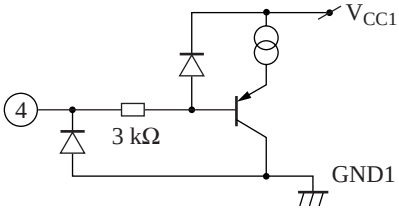	TILT control input: TILT control input pin Apply DC 0 V to 5 V. (typ. = 2.5 V)	—

■ Terminal Equivalent Circuits (continued)

Pin No.	Equivalent circuit	Description	DC voltage (V)
5	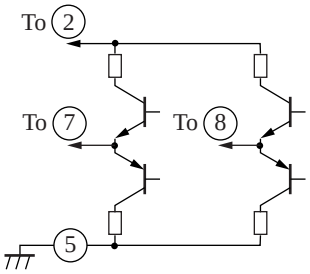	GND2: Grounding pin of TILT output block	0
6	—	N.C.	—
7	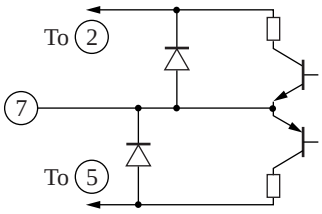	TILT positive output: TILT positive output pin Outputs in the same polarity as pin 4.	1.7 to 4.2
8	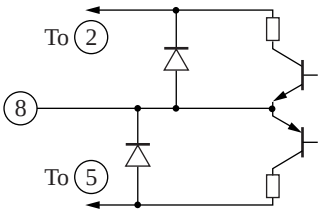	TILT negative output: TILT negative output pin Outputs in the polarity opposite to pin 4.	1.7 to 4.2
9		GND1: 12 V-system grounding pin	0

■ Application Circuit Example

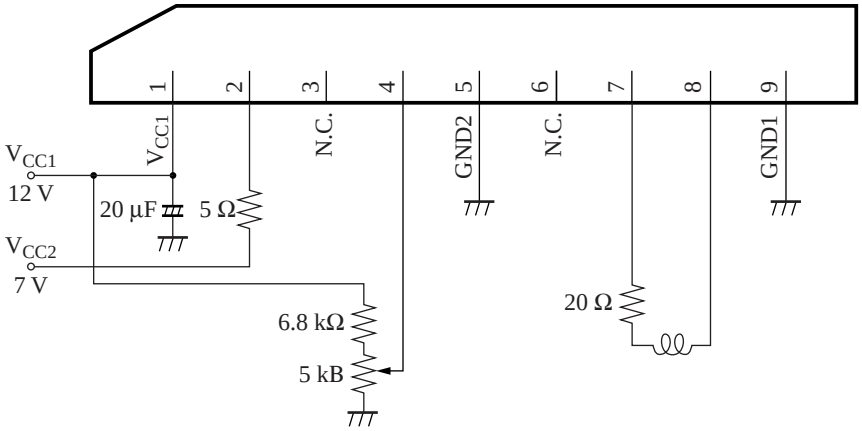

• Recommended application conditions

Parameter	Symbol	Range	Unit
TILT control input	V_{4-9}	0 to 6	V
TILT positive output	I_7	–150 to +150	mA
TILT negative output	I_8	–150 to +150	mA
Peak current	I_{7P}	– 0.7 to +0.7	A
	I_{8P}	– 0.7 to +0.7	