查询AT5654供应商 捷多邦，专业PCB打样工厂，24小时加急出货

Aimtron
圓創科技股份有限公司

AT5654

4-Channel BTL Motor Driver for CD-ROM

Features

- AT5654 is a 4 channel driver for optical disc motor driver. Dual channel current feedback type drivers are built in, in addition to dual channel motor driver.
- Separating Vcc into Pre-power of sled motor, Power of loading motor and Power of actuator, can make batter power efficiency, by low supply voltage drive.
- Stand-by mode built in.
- Thermal shutdown circuit on chip.
- Compatible with BA5954

Description

The AT5654 is a 4-channel BTL driver IC for driving the motors and actuators in products such as CD-ROM/DVD-ROM/DVD-Player drives. Two of the channels use current feedback to minimize the current phase shift caused by the influence of load inductance.

Applications

CD-ROM drives, DVD drives, DVD-ROM drives.

Block Diagram

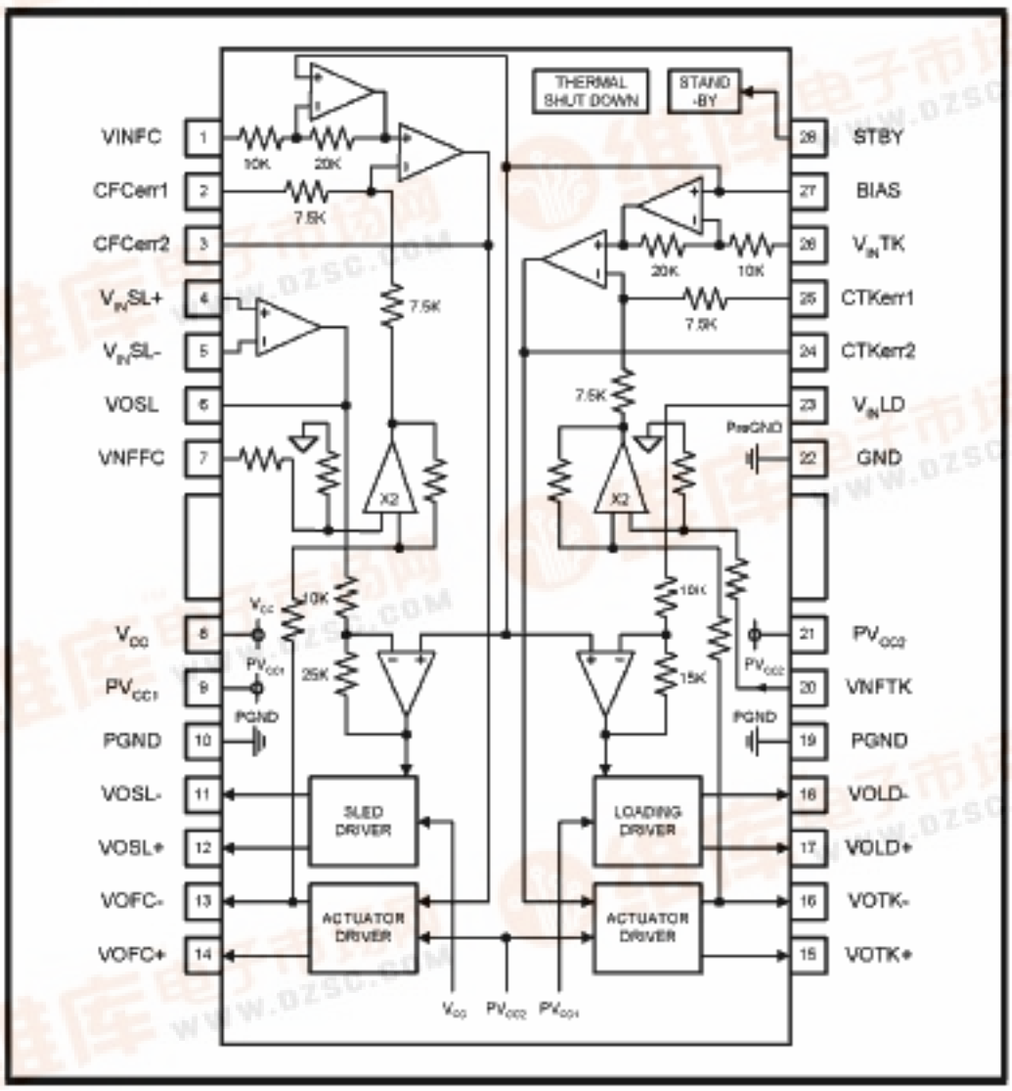

10F-1, No.55, Tung Kuang Road, Hsinchu, Taiwan, R.O.C.
Tel: 886-3-575-3058
Fax: 886-3-575-3015
Email: service@aimtron.com.tw
http://www.aimtron.com.tw
01/12/26

找PDF 维库一下 pdf.dzsc.com

Pin Descriptions

Pin No.	Pin name	Function
1	VINFC	Focus drive input
2	CFCerr1	For connection of capacitor for the error amp filter
3	CFCerr2	For connection of capacitor for the error amp filter
4	VINSL +	Op-amp input (+) for the sled driver
5	VINSL -	Op-amp input (-) for the sled driver
6	VOSL	Op-amp output for the sled driver
7	VNFFC	Focus driver feedback pin
8	Vcc	Vcc
9	PVcc1	Power Vcc for sled driver block
10	PGND	Ground for Sled driver block
11	VOSL -	sled driver output (-)
12	VOSL +	sled driver output (+)
13	VOFC -	Focus driver output (-)
14	VOFC +	Focus driver output (+)
15	VOTK +	Tracking driver output (+)
16	VOTK -	Tracking driver output (-)
17	VOLD +	Loading driver output (+)
18	VOLD -	Loading driver output (-)
19	PGND	Ground for Actuator driver block
20	VNFTK	Tracking driver feedback pin
21	PVcc2	Power Vcc for Actuator driver block
22	GND	Ground
23	VINTK	Loading driver input
24	CTKerr2	For connection of capacitor for the error amp filter
25	CTKerr1	For connection of capacitor for the error amp filter
26	VINTK	Tracking driver input
27	BIAS	Bias input
28	STBY	Stand-By control

Notes: The indicated polarities for the output pins are for when all inputs are (+).
The output H bridge supply pins are PVcc1 for the loading channel, PVcc2 for the focus, tracking channels, and Vcc for the pre-block and sled channel. Always ensure that Vcc≥PVcc1,2.

PinOut

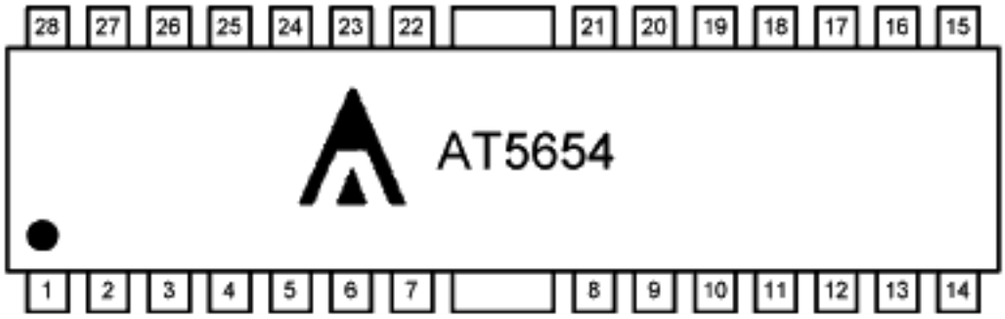

Absolute maximum ratings (Ta = 25°C)

Parameter	Symbol	Limits	unit
Power supply voltage	V_{CC}、PVcc1,2	13.5	V
Power dissipation	P_d	1.7*	W
Operating temperature	T_{opr}	-30~+80	°C
Storage temperature	T_{stg}	-55~+150	°C

∗ Reduce by 13.6 mW for each increase in T_a of 1°C over 25°C.
When mounted on a 70mm × 70mm × 1.6 mm glass epoxy board.

Recommended operating conditions (Ta = 25°C)

Parameter	Symbol	Limits	unit
Power supply voltage	Vcc	4.0~13.2	V
	PVcc1	4.0~Vcc	V
	PVcc2	4.0~Vcc	V

Electrical characteristics

(unless otherwise noted, Ta = 25°C, V_{CC} = PV_{CC1} =12V, PV_{CC2} =5V, V_{BIAS}=2.5V, R_{L1}= R_{L2}=8Ω, R_{L3}= R_{L4}=15Ω)

Parameter	Symbol	Min.	Typ.	Max.	Unit	Conditions
Quiescent current	I_{CC}	-	18	27	mA	
Stand-by quiescent current	I_{ST}	-	-	0.5	mA	
Voltage for Stand-by ON	V_{STON}	0	-	0.5	V	
Voltage for Stand-by OFF	V_{STOFF}	2.0	-	-	V	
<Actuator driver>						
Output offset current	$I_{O1,2}$	-6	-	6	mA	
Maximum output amplitude	$V_{O1,2}$	3.6	4.0	-	V	V_{IN} = V_{BIAS} ± 1.5V
Trans conductance	Gm	1.3	1.5	1.7	A/V	V_{IN} = V_{BIAS} ± 0.2V
<Sled motor driver/Pre OP-amp>						
Common mode input range	V_{ICM}	-0.3	-	11.0	V	V_{BIAS} =6 V
	V_{ICM}	-0.3	-	4.0	V	Vcc=PVcc1=5V
Input bias current	I_{BOP}	-	30	300	nA	
Low level output voltage	V_{OLOP}	-	0.1	0.3	V	
Output source current	I_{SO}	0.3	0.5	-	mA	
Output sink current	I_{SI}	1	-	-	mA	
<Sled motor driver>						
Output offset voltage	V_{OFFSL}	-100	0	100	mV	
Maximum output voltage	V_{O3}	7.5	9.0	-	V	V_{IN} = V_{BIAS} ± 1.5V
Closed loop voltage gain	G_{VSL}	18.0	20.0	22.0	dB	V_{IN} = V_{BIAS} ± 0.2V
<Loading motor driver>						
Output offset voltage	V_{OFFLD}	-50	0	50	mV	
Maximum output voltage	V_{O4-1}	7.5	9.0	-	V	V_{IN} = V_{BIAS} ± 2.0V
Maximum output voltage	V_{O4-2}	3.6	4.0	-	V	V_{IN} = V_{BIAS} ± 1.5V Vcc=PVcc1=5V
Closed loop voltage gain	G_{VLD}	13.5	15.5	17.5	dB	V_{IN} = BIAS ± 0.2V
Gain error by polarity	ΔG_{VLD}	0	1	2	dB	V_{IN} = BIAS ± 0.2V

*This product is not designed for protection against radioactive rays.

Typical Curve

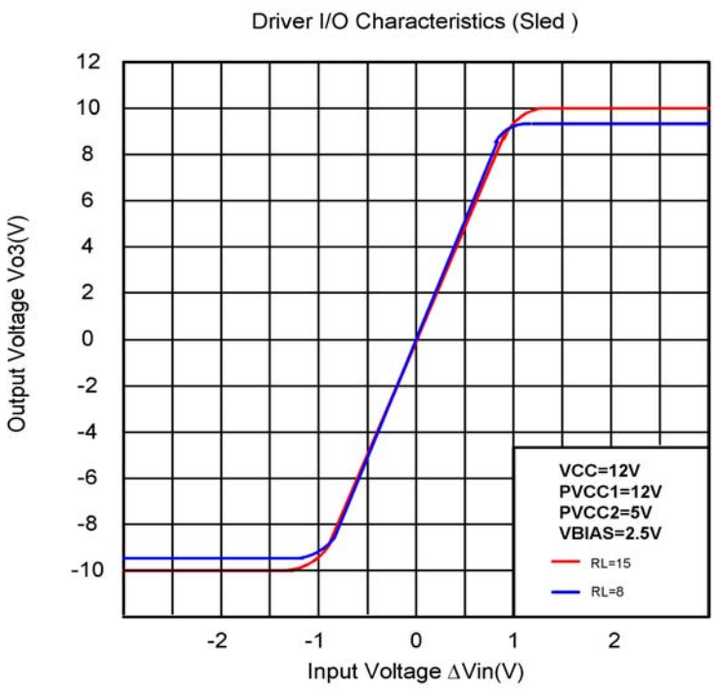

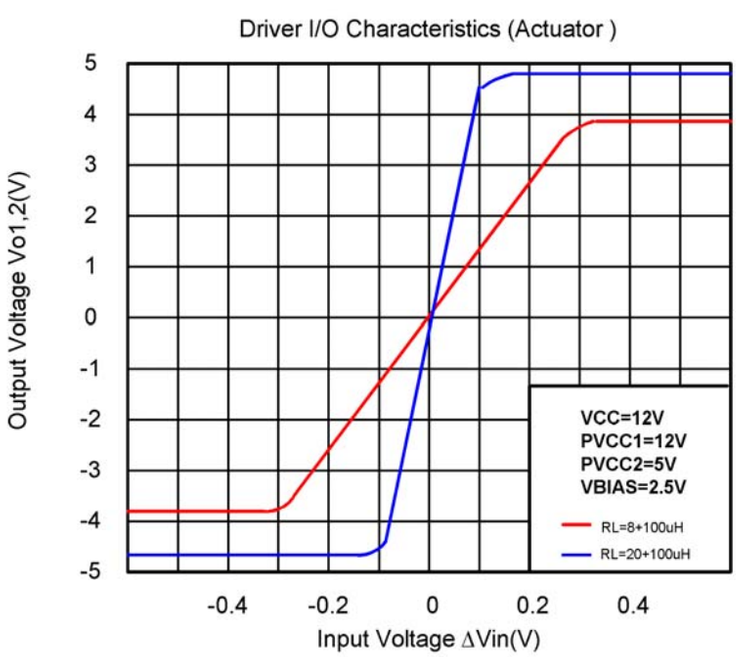

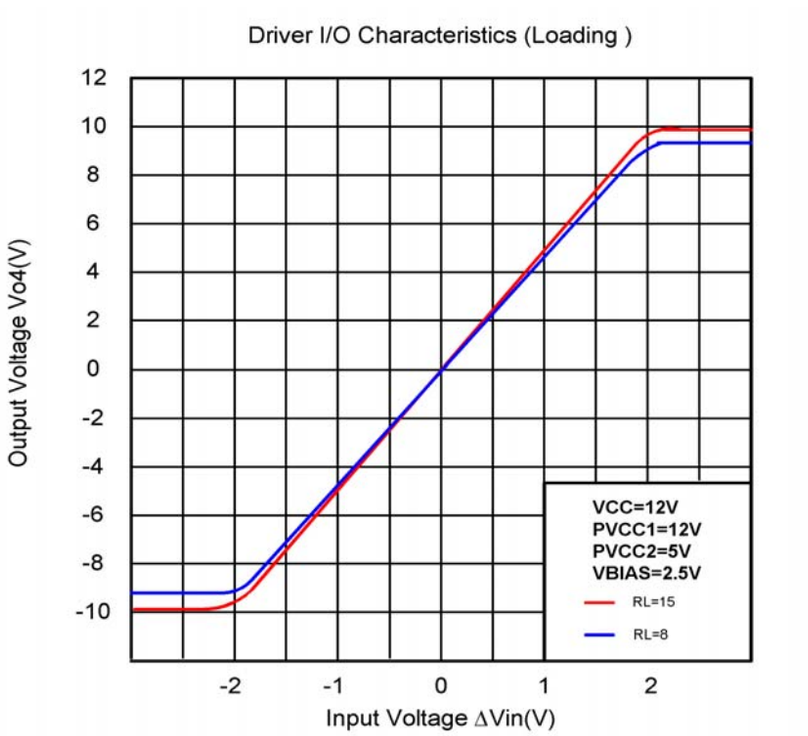
Driver I/O Characteristics (Loading)
Output Voltage Vo4(V)
12
10
8
6
4
2
0
-2
-4
-6
-8
-10
-2
-1
0
1
2
Input Voltage ΔVin(V)
VCC=12V
PVCC1=12V
PVCC2=5V
VBIAS=2.5V
RL=15
RL=8

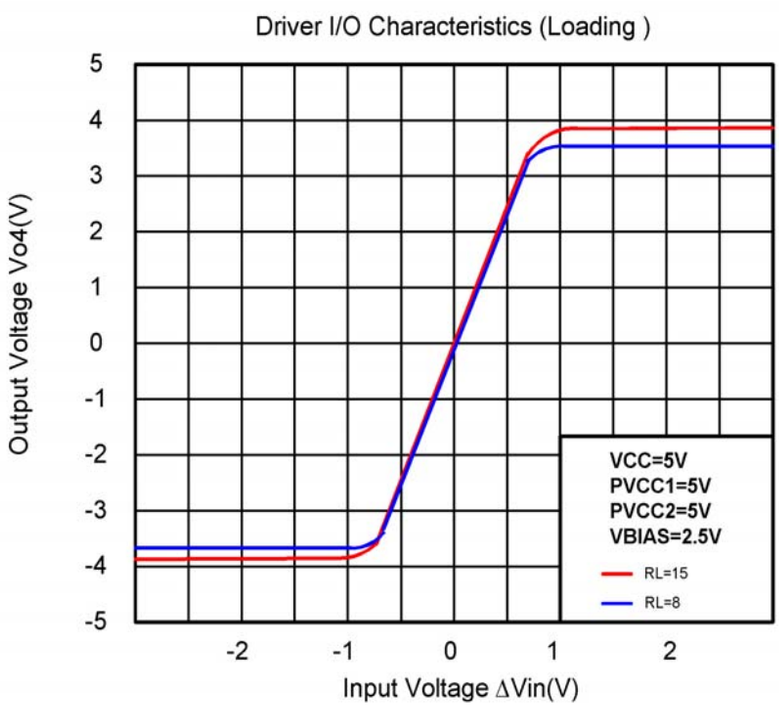
Driver I/O Characteristics (Loading)
Output Voltage Vo4(V)
5
4
3
2
1
0
-1
-2
-3
-4
-5
-2
-1
0
1
2
Input Voltage ΔVin(V)
VCC=5V
PVCC1=5V
PVCC2=5V
VBIAS=2.5V
RL=15
RL=8

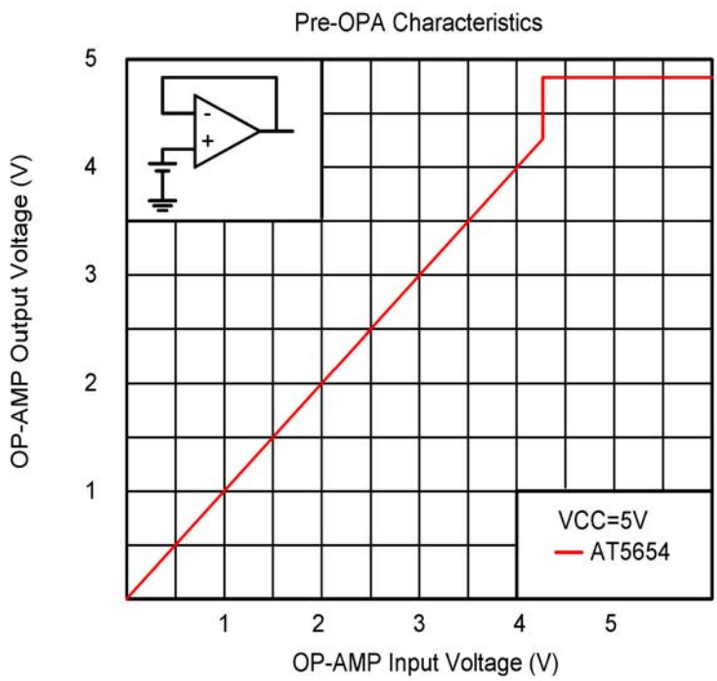
Pre-OPA Characteristics
OP-AMP Output Voltage (V)
5
4
3
2
1
VCC=5V
AT5654
1
2
3
4
5
OP-AMP Input Voltage (V)

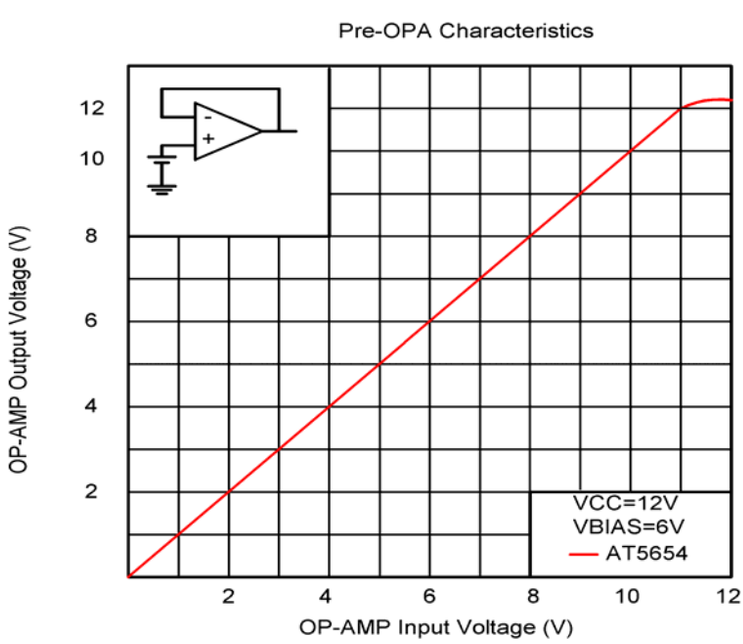
Pre-OPA Characteristics
OP-AMP Output Voltage (V)
12
10
8
6
4
2
VCC=12V
VBIAS=6V
AT5654
2
4
6
8
10
12
OP-AMP Input Voltage (V)

Test Circuit

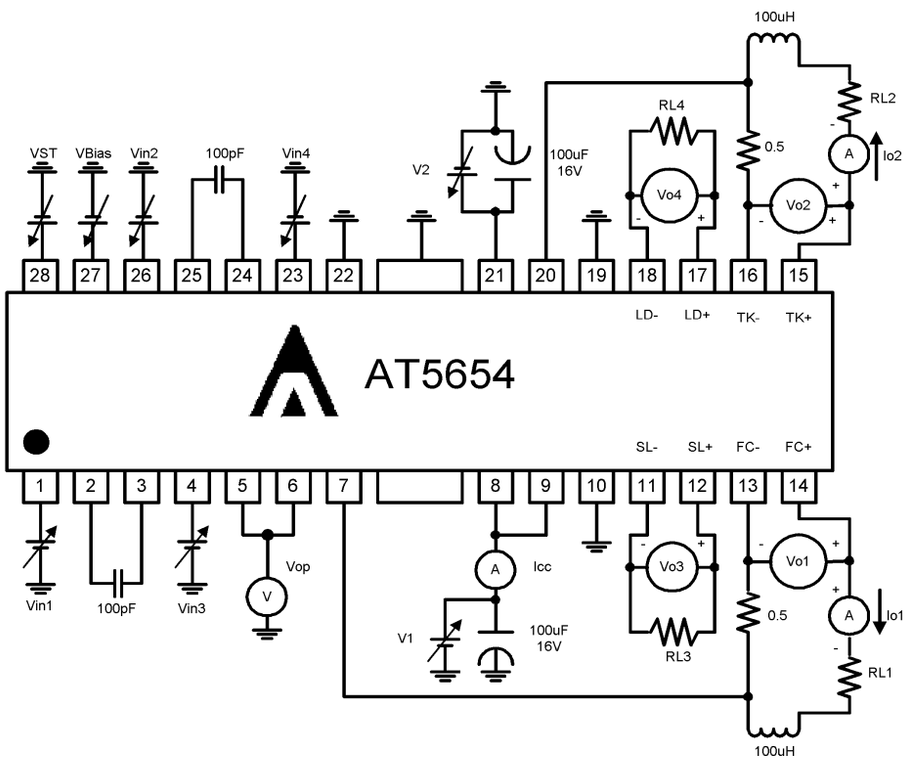

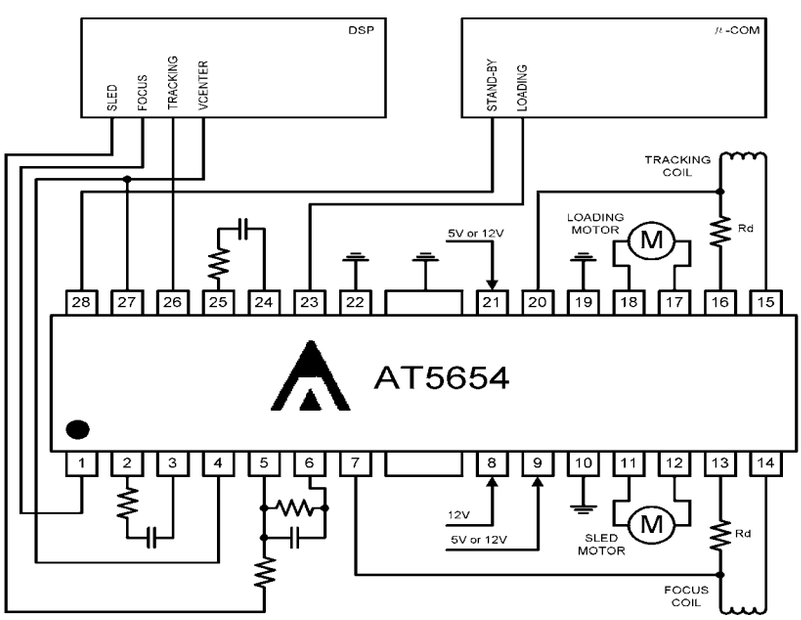

Application example

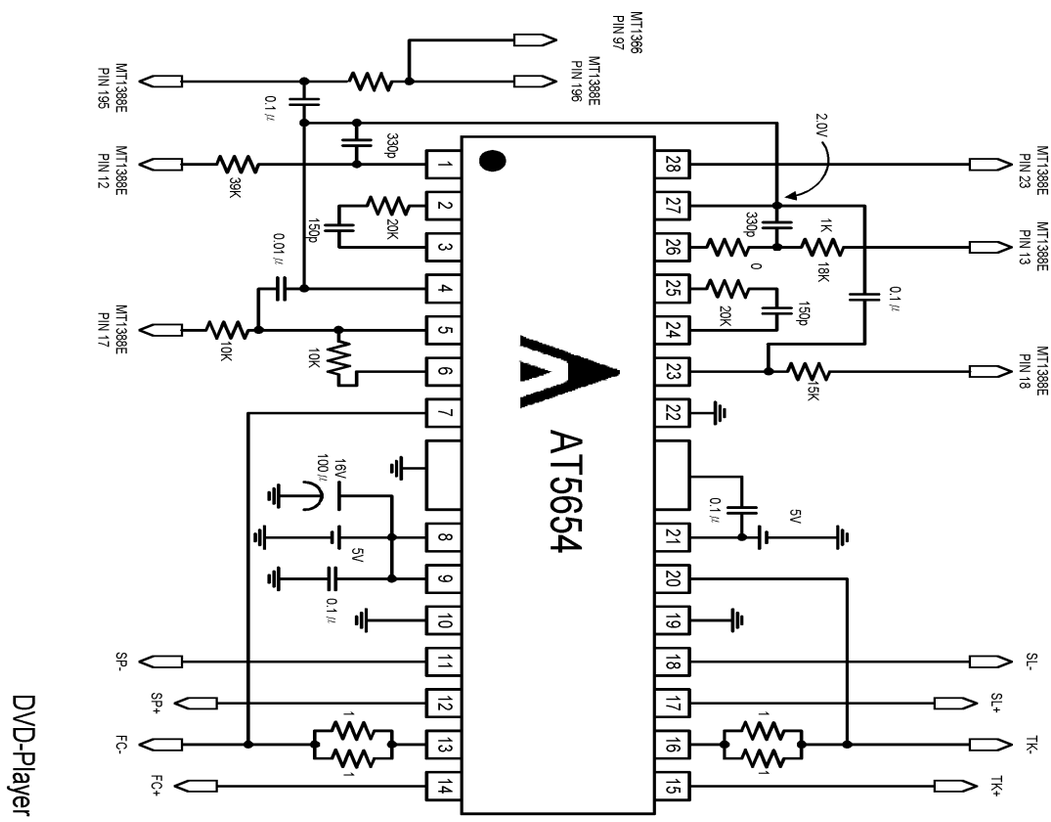

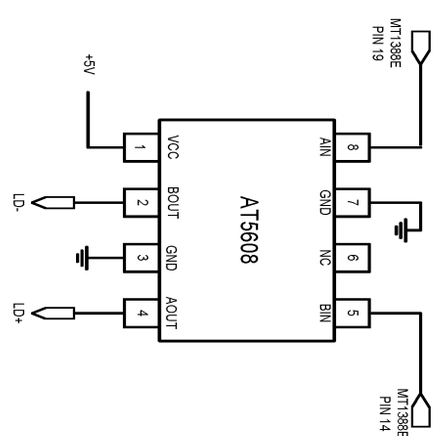

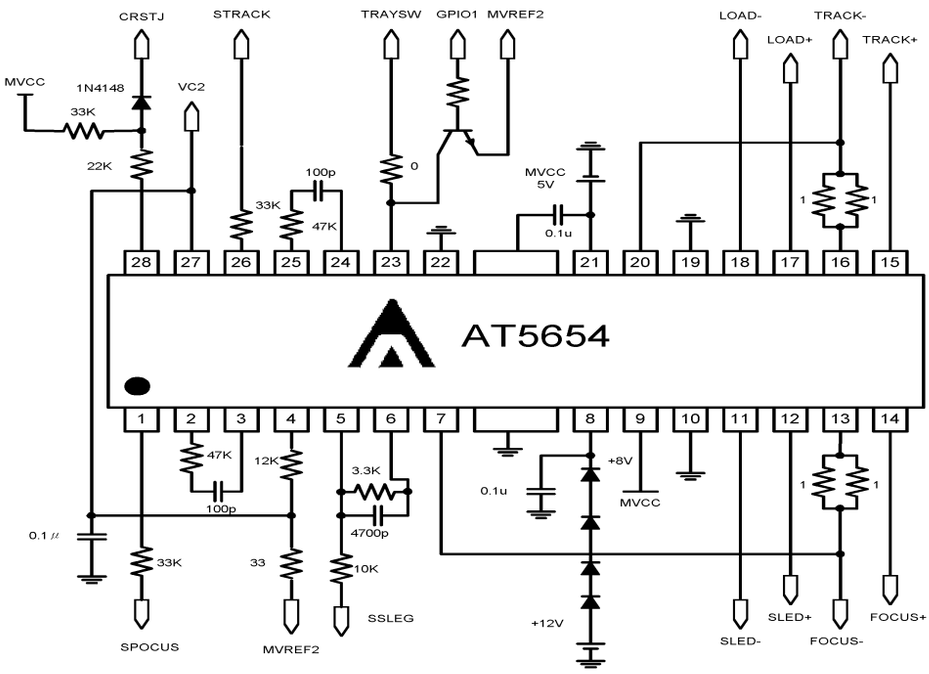

DVD-PLAYER LOADER

ALI Solution(AT5654+BA6849)

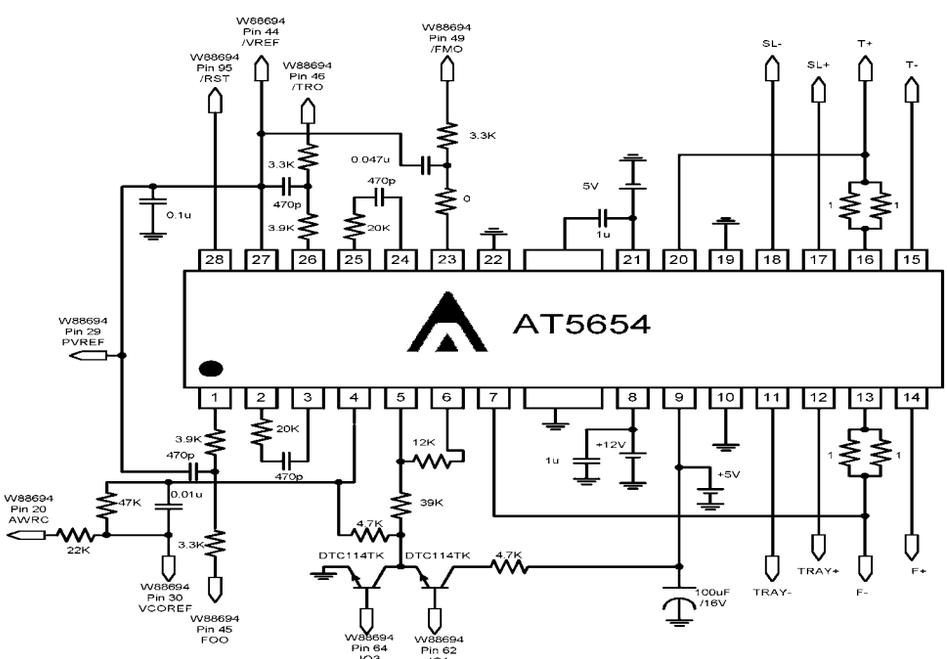

52X CD-ROM

(Winbond W88227+W88694+AT5654+TA8499)

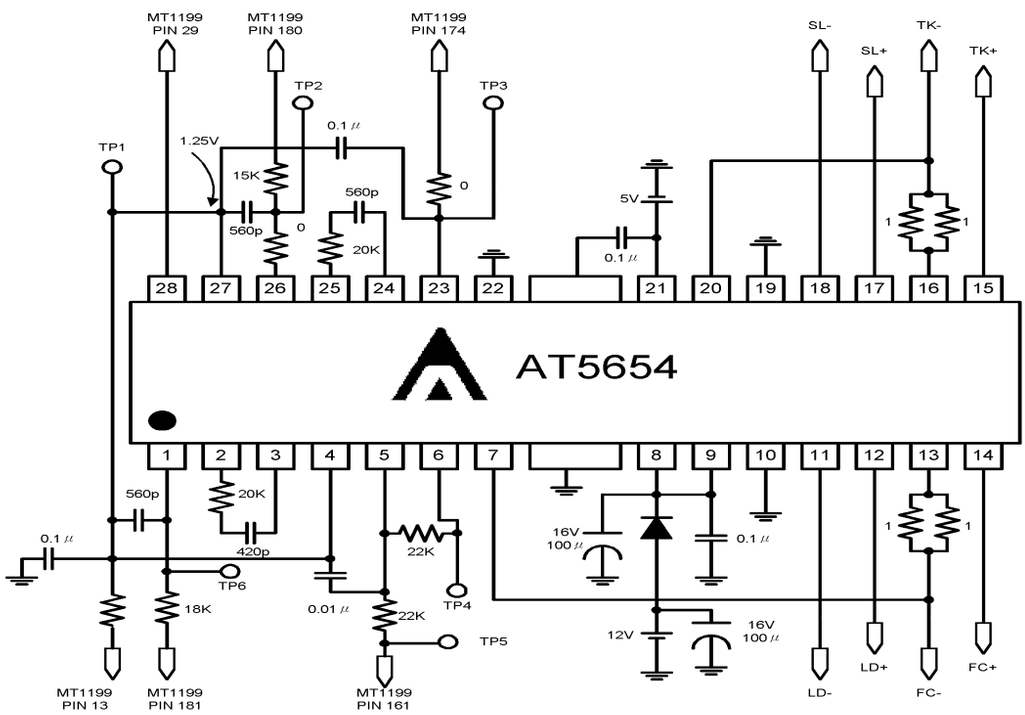

52X CD-ROM

Power Dissipation (Ta = 25°C)

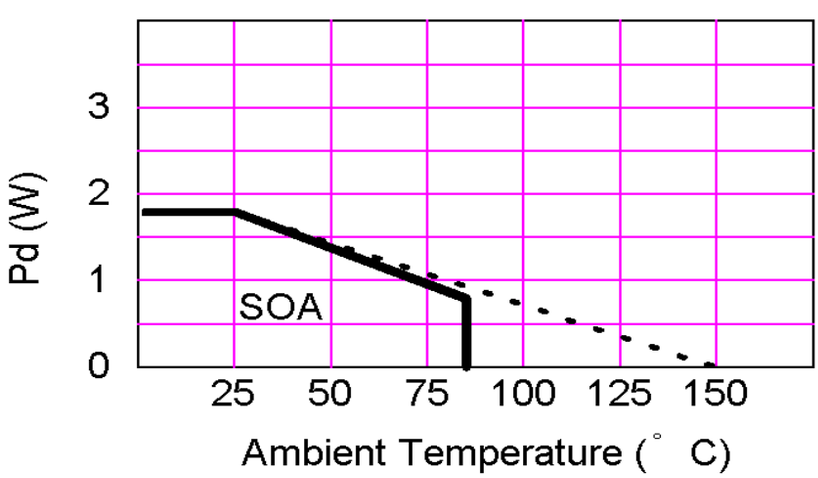

Condition: mount on 50x50 mm^2 t=1.0mm paper phenol PCB

Operation notes

(1) Thermal-shut-down circuit built in. In case IC chip temperature rise to 175℃ (typ.), thermal-shut-down circuit operates and output current muted. Next time IC chip temperature falls below 150℃ (typ.), the driver blocks start.

(2) In case stand-by-pin voltage under 0.5V or opened, quiescent current is muted. stand-by-pin voltage should be over 2.0V for normal application.

(3) Bias-pin (pin 27) should be pulled up more than 1.2V. In case bias-pin voltage is pulled down under 0.9V (typ.), output current is muted.

(4) Insert the by-pass capacitor between Vcc-pin and GND-pin of IC as possible as near (approximatelv 0.1 μF).

(5) Heat dissipation fins are attached to the GND on the inside of the package. Make sure to connect these to the external GND.

< Supplement >

Current-feedback driver

Trans conductance (output current/input voltage) is show as follows.

$$g_m = \frac{1}{R_d + R_{WIRE}} (A/V)$$

$R_{WIRE} = 0.15\Omega$ ($\pm$ 0.05Ω) Au wire

Package Outlines (units:mm): HSOP-28

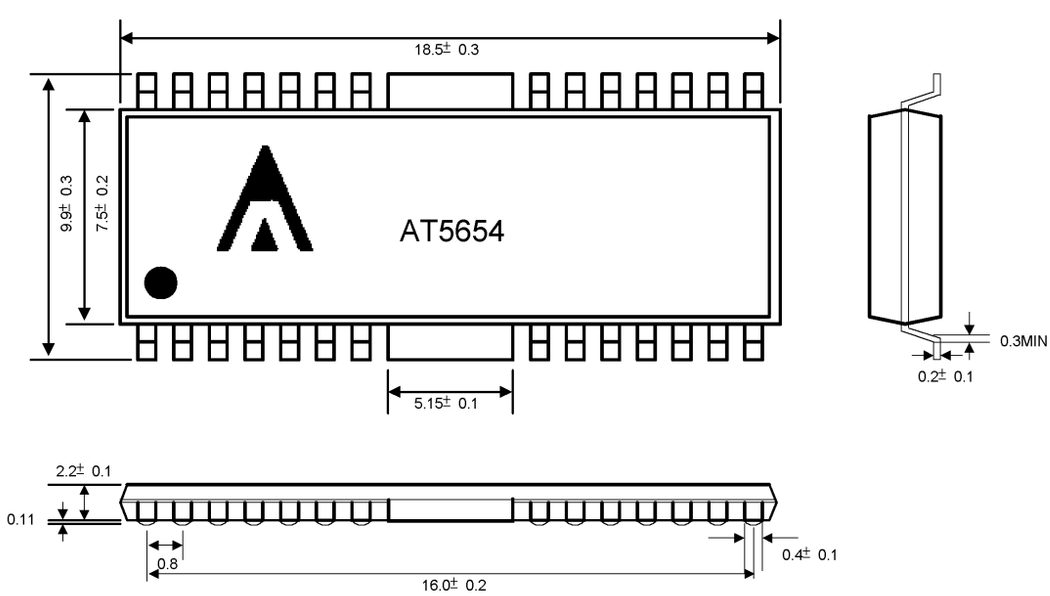

Reflow Condition (IR/Convection or VPR Reflow)

Reference JEDEC Standard J-STD-020A

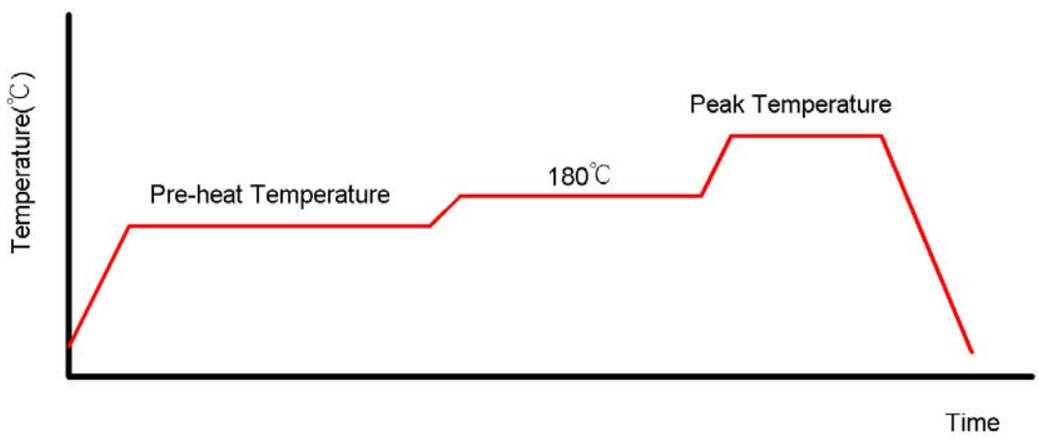

Classification Reflow Profiles

	Convection or IR/Convction	VPR
Average Heating Rate(180°C to peak)	5°C/second max.	10°C/second max.
Preheat Temperature(125±20°C)	120 seconds max.	
Temperature maintained above 180°C	10~150 seconds	
Time within 5°C of actual Peak Temperature	10~20 seconds	60 seconds
Peak Temperature Range(Note 1)	219~225°C or 235~240°C	219~225°C or 235~240°C
Cooling Rate	6°C /second max.	10°C/second max.
Time 25°C to Peak Temperature	6 minutes max.	

*1 The maximum peak temperatures for IR and VP reflow are depending on package dimensions.

Package Reflow Conditions

Pkg. Thickness ≥2.5mm and all bags	Pkg. Thickness <2.5mm and Pkg. Volume ≥350 mm^3	Pkg. Thickness <2.5mm and Pkg. Volume <350 mm^3
Convection 219~225°C		Convection 235~240°C
VPR 219~225°C		VPR 235~240°C
IR/Convection 219~225°C		IR/Convection 235~240°C