查询ATS616LSG供应商 捷多邦，专业PCB打样工厂，24小时加急出货

ATS616LSG

Dynamic Self-Calibrating Peak-Detecting Differential Hall Effect Gear Tooth Sensor

Package SG, 4-pin SIP

1. VCC
2. VOUT
3. Test Pin (Tie to GND)
4. GND

ABSOLUTE MAXIMUM RATINGS

Supply Voltage, V_{CC} ..... **26.5 V***
Reverse-Supply Voltage, V_{RCC} ..... **–18 V**
Output Off Voltage, V_{OUTOFF} ..... **24 V**
Continuous Output Current, I_{OUT} ..... **25 mA**
Reverse-Output Current, I_{ROUT} ..... **50 mA**
Operating Temperature
Ambient, T_A, Range L ..... **–40°C to 150°C**
Maximum Junction, $T_{J(max)}$ ..... **165°C**
Storage Temperature, T_S ..... **–65°C to 170°C**

*See Power Derating section.

The ATS616 gear-tooth sensor is a peak-detecting device that uses automatic gain control and an integrated capacitor to provide extremely accurate gear edge detection down to low operating speeds. Each sensor module consists of a high-temperature plastic shell that holds together a samarium-cobalt magnet, a pole piece, and a differential open-collector Hall IC that has been optimized to the magnetic circuit. This small package can be easily assembled and used in conjunction with a wide variety of gear shapes and sizes.

The gear-sensing technology used for this sensor module is Hall-effect based. The sensor incorporates a dual-element Hall IC that switches in response to differential magnetic signals created by ferrous targets. The sophisticated processing circuitry contains an A-to-D converter that self-calibrates (normalizes) the internal gain of the device to minimize the effect of air-gap variations. The patented peak-detecting filter circuit eliminates magnet and system offsets and has the ability to discriminate relatively fast changes such as those caused by tilt, gear wobble, and eccentricities. This easy-to-integrate solution provides first-tooth detection and stable operation to extremely low rpm. The ATS616 can be used as a replacement for the ATS612LSB, eliminating the external peak-holding capacitor needed by the ATS612LSB.

The ATS616 is ideal for use in systems that gather speed, position, and timing information using gear-tooth-based configurations. This device is particularly suited to those applications that require extremely accurate duty cycle control or accurate edge-detection, such as automotive camshaft sensing.

TheATS616 is provided in a 4-pin SIP that is Pb (lead) free, with a 100% matte tin plated leadframe.

Features and Benefits

- Self-calibrating for tight timing accuracy
- First-tooth detection
- Immunity to air gap variation and system offsets
- Eliminates effects of signature tooth offsets
- Integrated capacitor provides analog peak and valley information
- Extremely low timing-accuracy drift with temperature changes
- Large air gap capability
- Small, integrated package
- Optimized magnetic circuit
- Undervoltage lockout (UVLO)
- Wide operating voltage range

Use the following complete part numbers when ordering:

Part Number	Package	Packing*
ATS616LSGTN-T	4-pin plastic SIP	13-in. reel, 800 pieces/reel

*Contact Allegro for additional packaging and handling options.

找PDF 维库一下 pdf.dzsc.com

Allegro MicroSystems, Inc.
115 Northeast Cutoff, Box 15036
Worcester, Massachusetts 01615-0036 (508) 853-5000

Functional Block Diagram

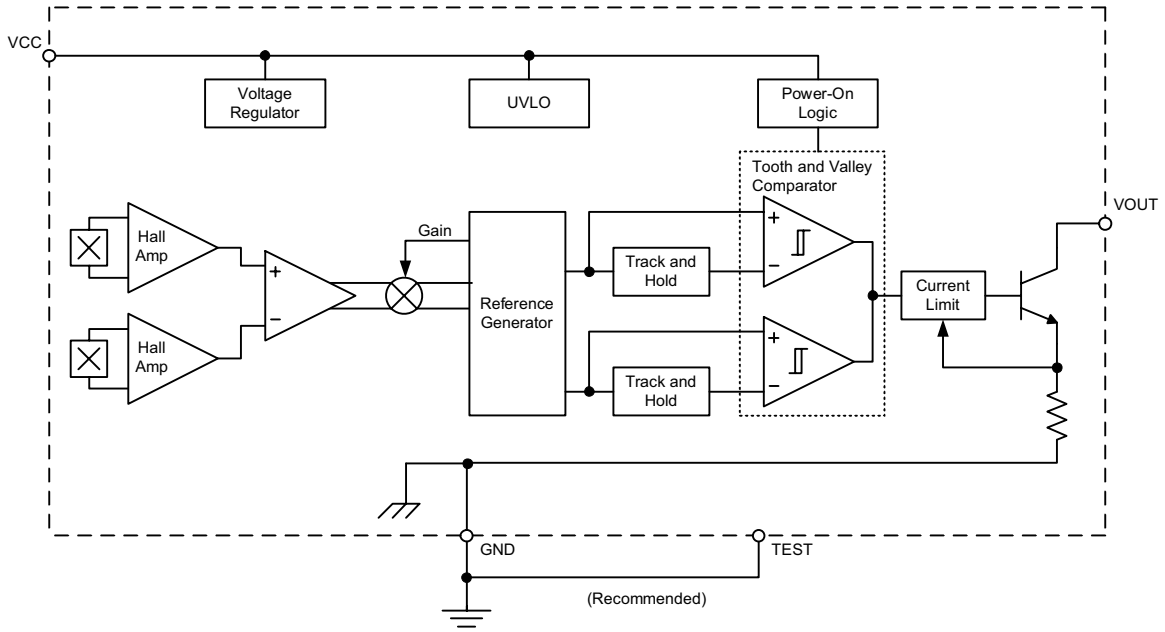

OPERATING CHARACTERISTICS over operating voltage and temperature range, unless otherwise noted

Characteristic	Symbol	Test Condition	Min.	Typ.[1]	Max.	Units
ELECTRICAL CHARACTERISTICS						
Supply Voltage[2]	V_{CC}	Operating, T_J < 165°C	3.5	–	24	V
Power-On State	POS	V_{CC} = 0 → 5 V	–	HIGH	–	V
Undervoltage Lockout Threshold	$V_{CC(UV)}$	V_{CC} = 0 → 5 V; V_{CC} = 5 → 0 V	–	–	3.5	V
Output On Voltage	$V_{OUT(SAT)}$	I_{OUT} = 20 mA	–	200	400	mV
Supply Zener Clamp Voltage	$V_{Zsupply}$	I_{CC} = 16 mA, T_A = 25°C	28	–	–	V
Output Zener Clamp Voltage	$V_{Zoutput}$	I_{OUT} = 3 mA, T_A = 25°C	30	–	–	V
Supply Zener Current	$I_{Zsupply}$	V_S = 28 V	–	–	15	mA
Output Zener Current	$I_{Zoutput}$	V_{OUT} = 30 V	–	–	3	mA
Output Current Limit	I_{OUTM}	V_{OUT} = 12 V	25	45	55	mA
Output Leakage Current	I_{OUTOFF}	V_{OUT} = 24 V	–	–	15	μA
Supply Current	I_{CC}	V_{CC} > $V_{CC(min)}$	3	6	12	mA
Power-On Time	t_{PO}	V_{CC} > 5 V	–	80	500	μs
Output Rise Time[3]	t_r	R_{LOAD} = 500 Ω, C_S = 10 pF	–	0.3	5.0	μs
Output Fall Time[3]	t_f	R_{LOAD} = 500 Ω, C_S = 10 pF	–	0.2	5.0	μs
PERFRORMANCE CHARACTERISTICS						
Operating Air Gap Range	AG	Operating within specification, Target Speed > 10 rpm	0.4	–	2.5	mm
Operating Magnetic Flux Density Differential[4]	$B_{AG(p-p)}$	Operating within specification, Target Speed > 10 rpm	60	–	–	G
Operating Frequency	f		10	–	10 000	Hz
Initial Calibration Cycle[5]	n_{cal}	Output edges before calibration is completed, at f_{sig} < 100 Hz	1	1	1	Edge
Calibration Mode Disable	n_{dis}	Output falling edges for startup calibration to be complete	64	64	64	Edge
Relative Timing Accuracy, Sequential	E_θ	Target Speed = 1000 rpm, $B_{AG(p-p)}$ > 100 G	–	±0.5	±0.75	(°)
		Target Speed = 1000 rpm, $B_{AG(p-p)}$ > 60 G	–	–	±1.5	(°)
Allowable User Induced Differential Offset[4]	ΔB_{App}	Output switching only; may not meet data sheet specifications	–	–	±50	G

[1]Typical data is at V_{CC} = 8 V and T_A = 25°C. Performance may vary for individual units, within the specified maximum and minimum limits.
[2] Maximum voltage must be adjusted for power dissipation and junction temperature; see *Power Derating* section.
[3] C_S is the probe capacitance of the oscilloscope used to make the measurement.
[4] 10 G = 1 mT (millitesla), exactly.
[5]Non-uniform magnetic profiles may require additional edges before calibration is complete.

Allegro MicroSystems, Inc.
115 Northeast Cutoff, Box 15036
Worcester, Massachusetts 01615-0036 (508) 853-5000

Reference Target (Gear) Information

REFERENCE TARGET 60+2

Characteristics	Symbol	Test Conditions	Typ.	Units
Outside Diameter	D_o	Outside diameter of target	120	mm
Face Width	F	Breadth of tooth, with respect to sensor	6	mm
Circular Tooth Length	t	Length of tooth, with respect to sensor; measured at D_o	3	mm
Signature Region Circular Tooth Length	t_{SIG}	Length of signature tooth, with respect to sensor; measured at D_o	15	mm
Circular Valley Length	t_v	Length of valley, with respect to sensor; measured at D_o	3	mm
Tooth Whole Depth	h_t		3	mm
Material		Low Carbon Steel	–	–

Symbol Key

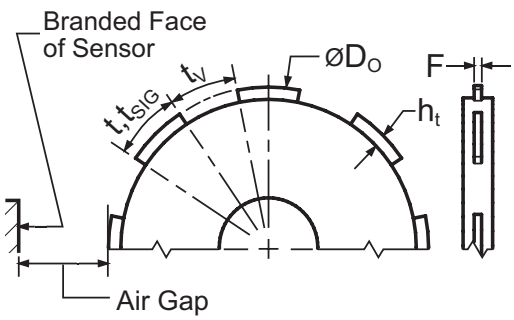

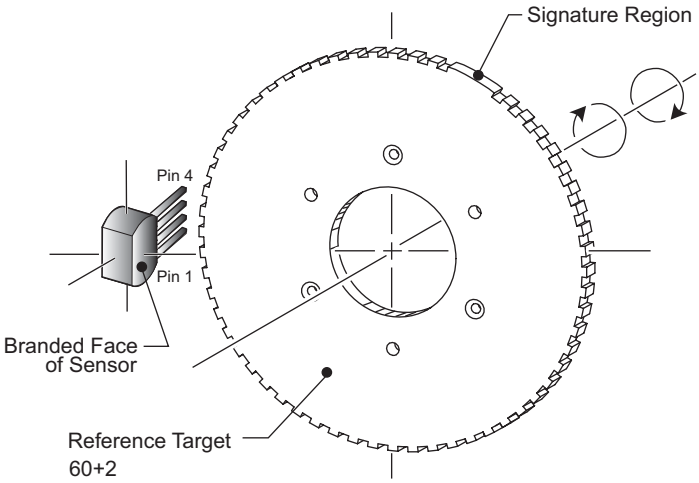

Figure 1. Configuration with Radial-Tooth Reference Target

For the generation of adequate magnetic field levels, the following recommendations should be followed in the design and specification of targets:

- 2 mm < tooth width, t < 4 mm
- Valley width, t_v > 2 mm
- Valley depth, h_t > 2 mm
- Tooth thickness, F ≥ 3 mm
- Target material must be low carbon steel

Although these parameters apply to targets of traditional geometry (radially oriented teeth with radial sensing, shown in figure 1), they also can be applied in applications using stamped targets (an aperture or rim gap punched out of the target material) and axial sensing. For stamped geometries with axial sensing, the valley depth, h_t, is intrinsically infinite, so the criteria for tooth width, t, valley width, t_v, tooth material thickness, F, and material specification need only be considered for reference. For example, F can now be < 3 mm.

Allegro MicroSystems, Inc.
115 Northeast Cutoff, Box 15036
Worcester, Massachusetts 01615-0036 (508) 853-5000

Characteristic Data

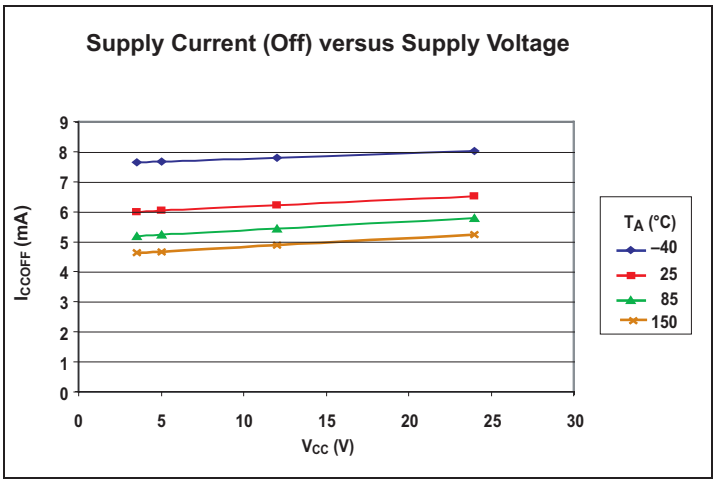

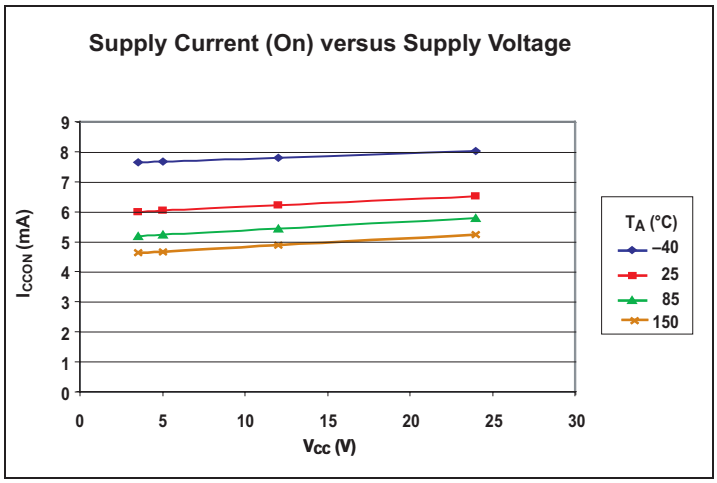

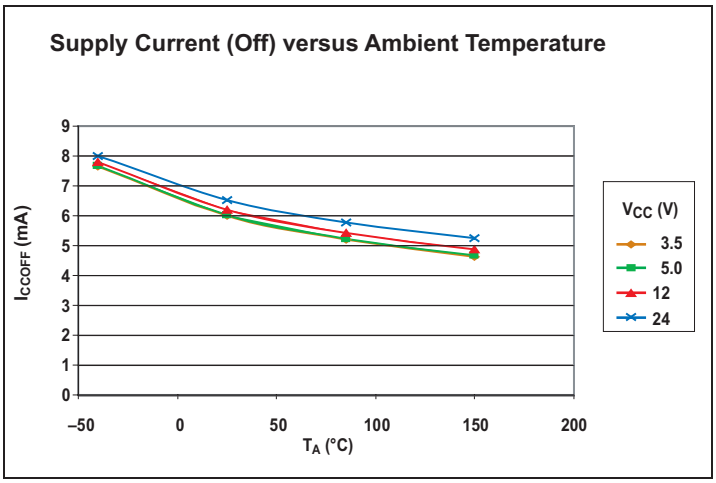

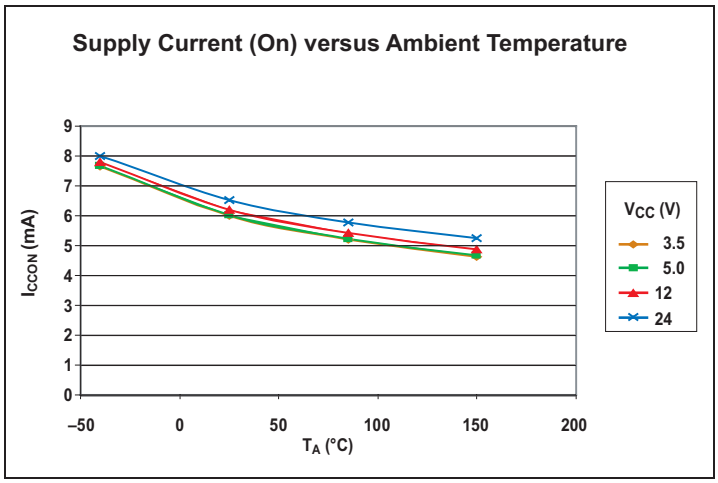

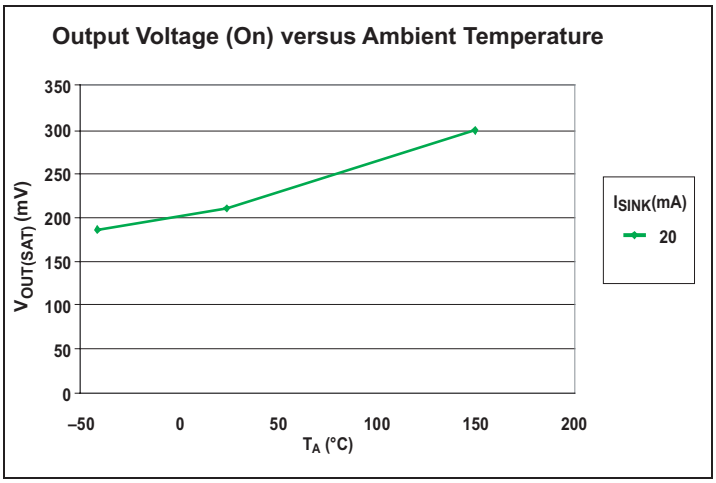

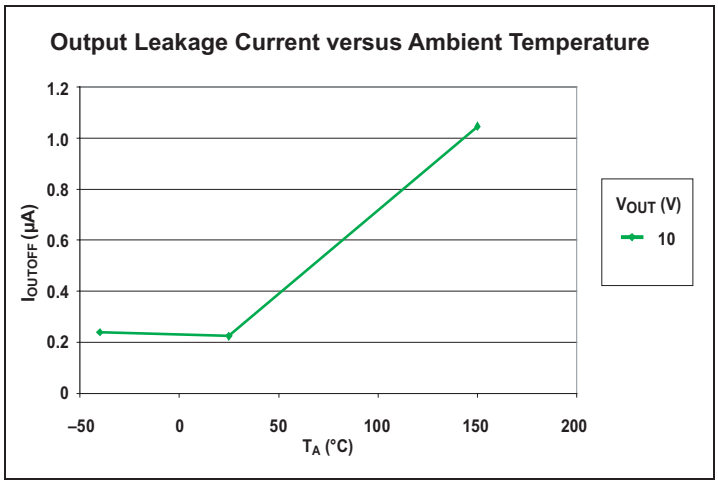

Continued on the next page.

Characteristic Data (continued)

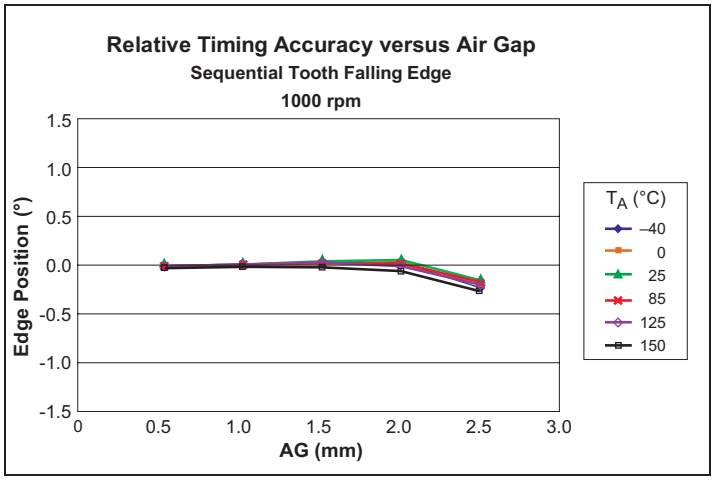

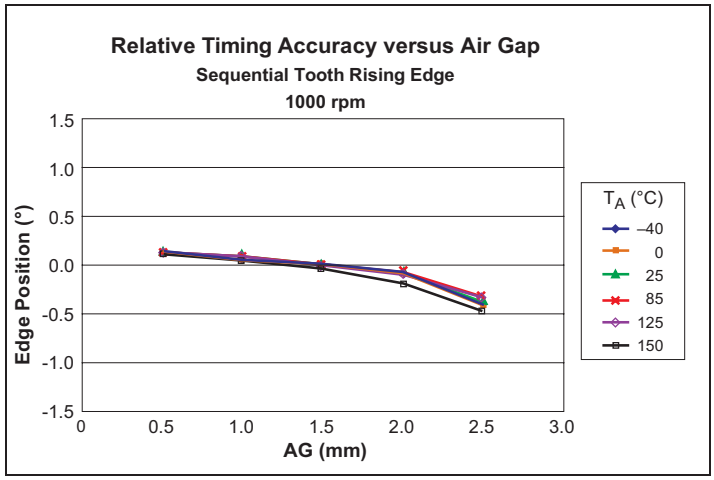

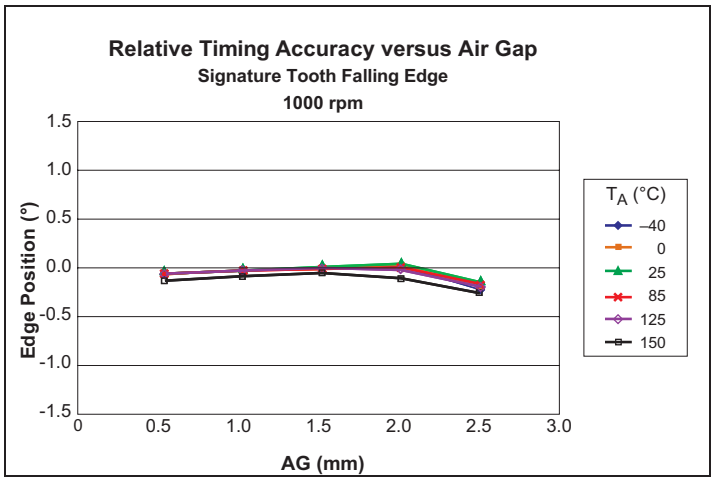

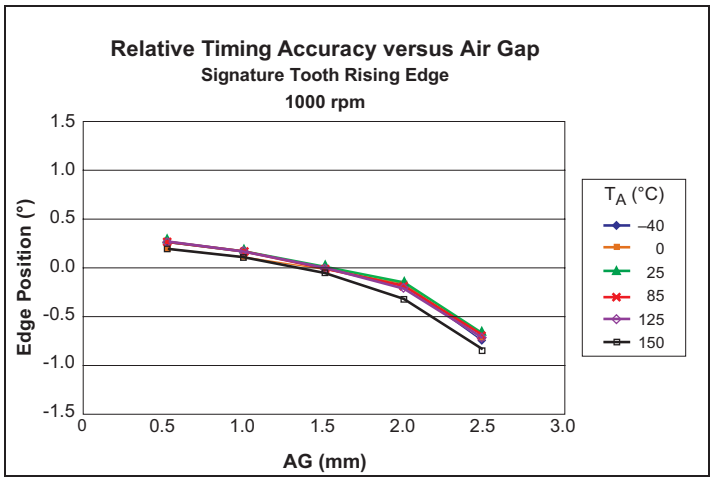

Characteristic Data (continued)

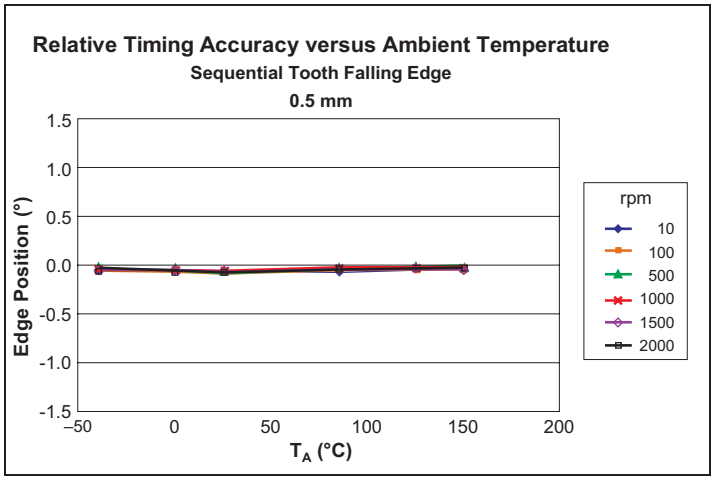

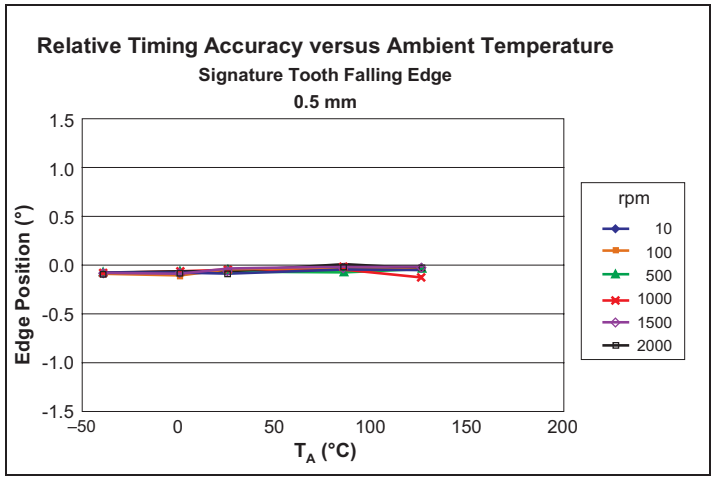

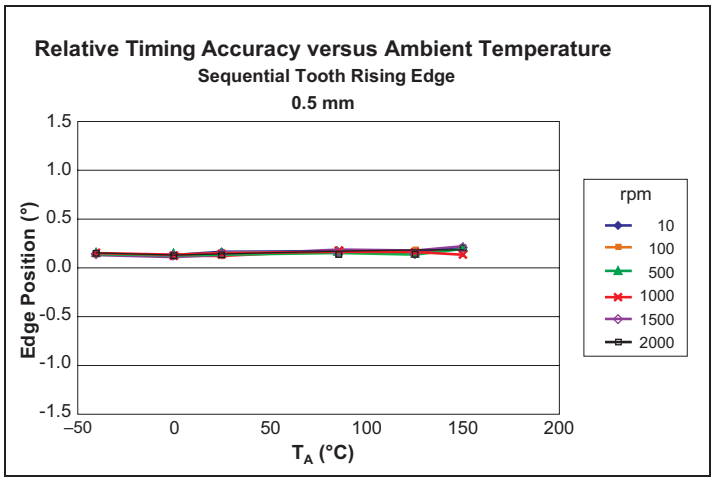

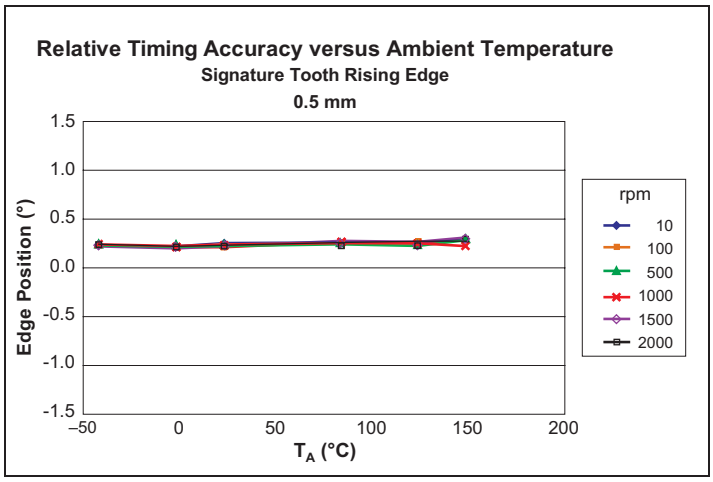

Allegro MicroSystems, Inc.
115 Northeast Cutoff, Box 15036
Worcester, Massachusetts 01615-0036 (508) 853-5000

THERMAL CHARACTERISTICS may require derating at maximum conditions, see application information

Characteristic	Symbol	Test Conditions*	Value	Units
Package Thermal Resistance	$R_{\theta JA}$	Single-sided PCB with copper limited to solder pads	126	ºC/W
		Two-sided PCB with copper limited to solder pads and 3.57 in.^{2} (23.03 cm^2) of copper area each side, connected to GND pin	84	ºC/W

*Additional information is available on the Allegro Web site.

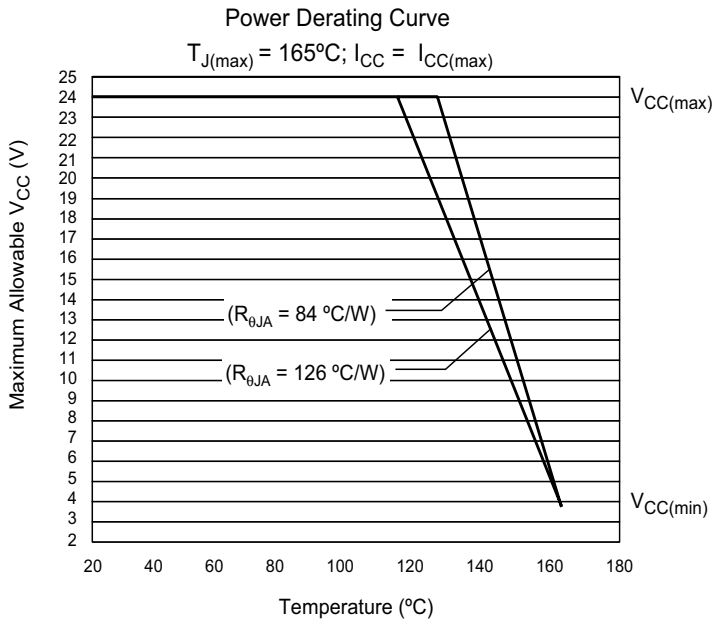

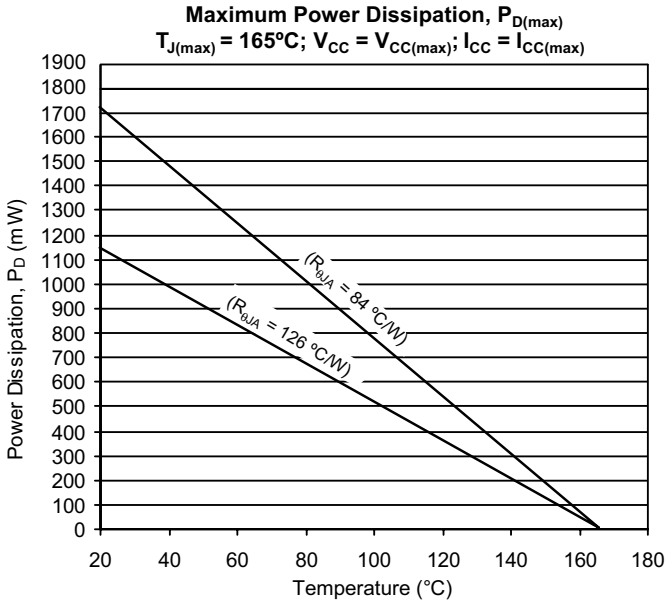

Allegro MicroSystems, Inc.
115 Northeast Cutoff, Box 15036
Worcester, Massachusetts 01615-0036 (508) 853-5000

Functional Description

Assembly Description. The ATS616 gear-tooth sensor is a Hall IC/magnet configuration that is fully optimized to provide digital detection of gear tooth edges. This sensor is packaged in a molded miniature plastic body that has been optimized for size, ease of assembly, and manufacturability. High operating temperature materials are used in all aspects of construction.

After proper power is applied to the component, the sensor is capable of instantly providing digital information that is representative of the profile of a rotating gear. No additional optimization or processing circuitry is required. This ease of use should reduce design time and incremental assembly costs for most applications.

Sensing Technology. The gear tooth sensor module contains a single-chip differential Hall effect sensor IC, a samarium cobalt magnet, and a flat ferrous pole piece (figure 2). The Hall IC consists of 2 Hall elements (spaced 2.2 mm apart) located so as to measure the magnetic gradient created by the passing of a ferrous object. The two elements measure the magnetic gradient and convert it to an analog voltage that is then processed in order to provide a digital output signal.

The Hall IC is self-calibrating and also possesses a temperature compensated amplifier and offset cancellation circuitry. Its voltage regulator provides supply noise rejection throughout the operating voltage range. Changes in temperature do not greatly affect this device due to the stable amplifier design and the offset rejection circuitry. The Hall transducers and signal processing electronics are integrated on the same silicon substrate, using a proprietary BiCMOS process.

Internal Electronics. The processing circuit uses a patented peak detection scheme to eliminate magnet and system offsets. This technique allows dynamic coupling and filtering of offsets without the power-up and settling time disadvantages of classical high-pass filtering schemes. The peak signal of every tooth and valley is detected by the filter and is used to provide an instant reference for the operate and release point comparator. In this manner, the thresholds are adapted and referenced to individual signal peaks and valleys, providing immunity to zero line variation from installation inaccuracies (tilt, rotation, and off-center placement), as well as for variations caused by target and shaft eccentricities. The peak detection concept also allows extremely low speed operation for small value filter capacitors.

The ATS616 also includes self-calibration circuitry that is engaged at power on. The signal amplitude is measured, and then the device gain is normalized. In this manner switchpoint drift versus air gap is minimized, and excellent timing accuracy can be achieved.

The AGC (Automatic Gain Control) circuitry, in conjunction with a unique hysteresis circuit, also eliminates the effect of gear edge overshoot as well as increases the immunity to false switching caused by gear tooth anomalies at close air gaps. The

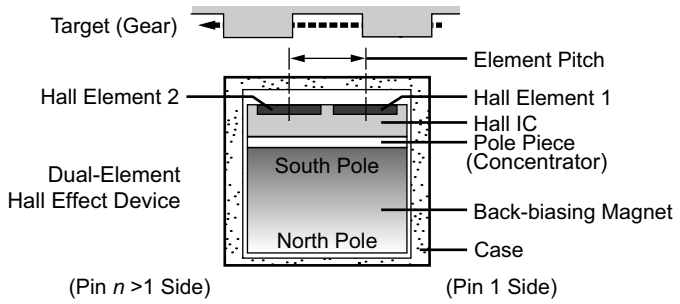

Figure 2. Relative motion of the target is detected by the dual Hall elements mounted on the Hall IC.

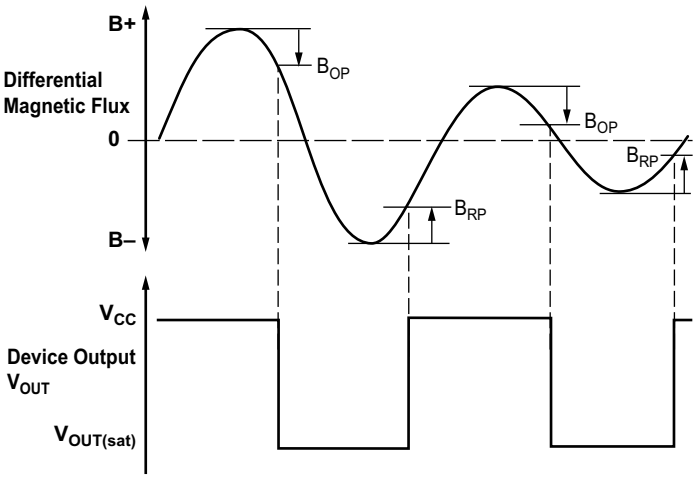

Figure 3. The peaks in the resulting differential signal are used to set the operate, B_{OP}, and release, B_{RP}, switchpoints.

Allegro MicroSystems, Inc.
115 Northeast Cutoff, Box 15036
Worcester, Massachusetts 01615-0036 (508) 853-5000

AGC circuit sets the gain of the device after power-on. Up to a 0.25 mm air gap change can occur after calibration is complete without significant performance impact.

Superior Performance. The ATS616 peak-detecting differential gear-tooth sensor module has several advantages over conventional Hall-effect gear-tooth sensors. The signal-processing techniques used in the ATS616 solve the catastrophic issues that affect the functionality of conventional digital gear-tooth sensors, such as the following:

- *Temperature drift.* Changes in temperature do not greatly affect this device due to the stable amplifier design and the offset rejection circuitry.
- *Timing accuracy variation due to air gap.* The accuracy variation caused by air gap changes is minimized by the self-calibration circuitry. A 2×-to-3× improvement can be seen.
- *Dual edge detection.* Because this device switches based on the positive and negative peaks of the signal, dual edge detection is guaranteed.
- *Tilted or off-center installation.* Traditional differential sensors can switch incorrectly due to baseline changes versus air gap caused by tilted or off-center installation. The peak detector circuitry references the switchpoint from the peak and is immune to this failure mode. There may be a timing accuracy shift caused by this condition.
- *Large operating air gaps.* Large operating air gaps are achievable with this device due to the sensitive switchpoints after power-on (dependent on target dimensions, material, and speed).
- *Immunity to magnetic overshoot.* The patented adjustable hysteresis circuit makes the ATS616 immune to switching on magnetic overshoot within the specified air gap range.
- *Response to surface defects in the target.* The gain-adjust circuitry reduces the effect of minor gear anomalies that would normally cause false switching.
- *Immunity to vibration and backlash.* The gain-adjust circuitry keeps the hysteresis of the device roughly proportional to the peak-to-peak signal. This allows the device to have good immunity to vibration even when operating at close air gaps.
- *Immunity to gear run out.* The differential sensor configuration eliminates the baseline variations caused by gear run out.

Differential vs. Single-Element Sensing. The differential Hall-effect configuration is superior in most applications to the classical single-element gear-tooth sensor. The single-element configuration commonly used (Hall-effect sensor mounted on the face of a simple permanent magnet) requires the detection of a small signal (often <100 G) that is superimposed on a large back-biased field, often 1500 G to 3500 G. For most gear/target configurations, the back-biased field values change due to concentration effects, resulting in a varying baseline with air gap, valley widths, eccentricities, and vibration (figure 4). The differential configuration (figure 5) cancels the effects of the back-biased field and avoids many of the issues presented by the single Hall element design.

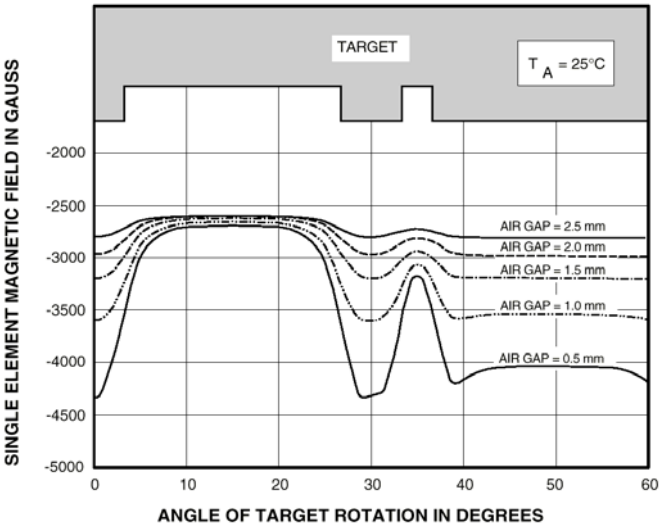

Figure 4. Affect of varying valley widths on single-element sensors.

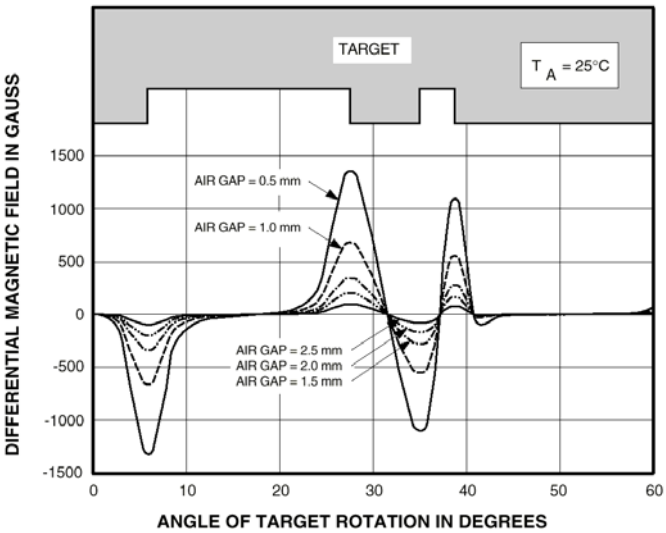

Figure 4. Affect of varying air gaps on differential sensors.

Peak Detecting vs. AC-Coupled Filters. High-pass filtering (normal ac coupling) is a commonly used technique for eliminating circuit offsets. However, ac coupling has errors at power-on because the filter circuit needs to hold the circuit zero value even though the circuit may power-on over a large signal. Such filtering techniques can only perform properly after the filter has been allowed to settle, which typically takes longer than 1s. Also, high-pass filter solutions cannot easily track rapidly changing baselines, such as those caused by eccentricities. (The term *baseline* refers to a 0 G differential field, where each Hall-effect element is subject to the same magnetic field strength; see figure 3.) In contrast, peak detecting designs switch at the change in slope of the differential signal, and so are baseline-independent both at power-on and while running.

Peak Detecting vs. Zero-Crossing Reference. The usual differential zero-crossing sensors are susceptible to false switching due to off-center and tilted installations that result in a shift of the baseline that changes with air gap. The track-and-hold peak detection technique ignores baseline shifts versus air gaps and provides increased immunity to false switching. In addition, using track-and-hold peak detection techniques, increased air gap capabilities can be expected because peak detection utilizes the entire peak-to-peak signal range, as compared to zero-crossing detectors, which switch at half the peak-to-peak signal.

Power-On Operation. The device powers-on in the Off state (output voltage high), irrespective of the magnetic field condition. The power-up time of the circuit is no greater than 500 µs. The circuit is then ready to accurately detect the first target edge that results in a high-to-low transition of the device output.

Undervoltage Lockout (UVLO). When the supply voltage, V_{CC}, is below the minimum operating voltage, $V_{CC(UV)}$, the device is off and stays off, irrespective of the state of the magnetic field. This prevents false signals, which may be caused by undervoltage conditions (especially during power-up), from appearing at the output.

Output. The device output is an open-collector stage capable of sinking up to 20 mA. An external pull-up (resistor) must be supplied to a supply voltage of not more than 24 V.

Output Polarity. The output of the unit will switch from low to high as the leading edge of a tooth passes the branded face of the sensor in the direction indicated in figure 6. This means that in such a configuration, the output voltage will be high when the sensor is facing a tooth. If the target rotation is in the opposite direction relative to the sensor, the output polarity will be opposite as well, with the unit switching from low to high as the leading edge passes the unit.

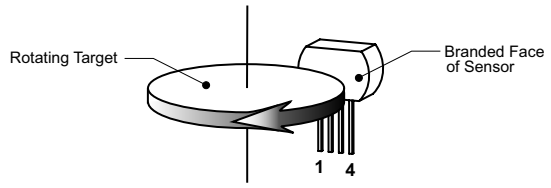

Figure 6. This left-to-right (pin 1 to pin 4) direction of target rotation results in a high output signal when a tooth of the target gear is nearest the branded face of the sensor. A right-to-left (pin 4 to pin 1) rotation inverts the output signal polarity.

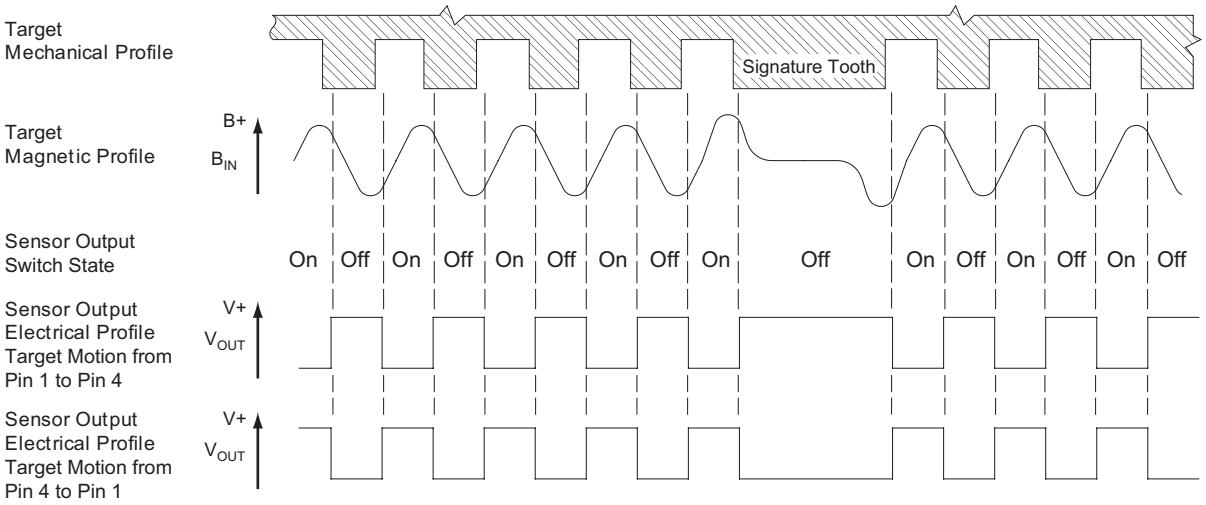

Figure 7. The magnetic profile reflects the geometry of the target, allowing the device to present an accurate digital output response.

Power Derating

The device must be operated below the maximum junction temperature of the device, $T_{J(max)}$. Under certain combinations of peak conditions, reliable operation may require derating supplied power or improving the heat dissipation properties of the application. This section presents a procedure for correlating factors affecting operating T_J. (Thermal data is also available on the Allegro MicroSystems Web site.)

The Package Thermal Resistance, $R_{\theta JA}$, is a figure of merit summarizing the ability of the application and the device to dissipate heat from the junction (die), through all paths to the ambient air. Its primary component is the Effective Thermal Conductivity, K, of the printed circuit board, including adjacent devices and traces. Radiation from the die through the device case, $R_{\theta JC}$, is relatively small component of $R_{\theta JA}$. Ambient air temperature, T_A, and air motion are significant external factors, damped by overmolding.

The effect of varying power levels (Power Dissipation, P_D), can be estimated. The following formulas represent the fundamental relationships used to estimate T_J, at P_D.

$$P_D = V_{IN} \times I_{IN} \qquad (1)$$

$$\Delta T = P_D \times R_{\theta JA} \qquad (2)$$

$$T_J = T_A + \Delta T \qquad (3)$$

For example, given common conditions such as: T_A= 25°C, V_{CC} = 12 V, I_{CC} = 4 mA, and $R_{\theta JA}$ = 140°C/W, then:

$$P_D = V_{CC} \times I_{CC} = 12\text{ V} \times 4\text{ mA} = 48\text{ mW}$$

$$\Delta T = P_D \times R_{\theta JA} = 48\text{ mW} \times 140°\text{C/W} = 7°\text{C}$$

$$T_J = T_A + \Delta T = 25°\text{C} + 7°\text{C} = 32°\text{C}$$

A worst-case estimate, $P_{D(max)}$, represents the maximum allowable power level ($V_{CC(max)}$, $I_{CC(max)}$), without exceeding $T_{J(max)}$, at a selected $R_{\theta JA}$ and T_A.

Example: Reliability for V_{CC} at T_A=150°C, package SG, using minimum-K PCB.

Observe the worst-case ratings for the device, specifically: $R_{\theta JA}$=126°C/W, $T_{J(max)}$ =165°C, $V_{CC(max)}$=24 V, and $I_{CC(max)}$ = 12 mA.

Calculate the maximum allowable power level, $P_{D(max)}$. First, invert equation 3:

$$\Delta T_{max} = T_{J(max)} - T_A = 165°\text{C} - 150°\text{C} = 15°\text{C}$$

This provides the allowable increase to T_J resulting from internal power dissipation. Then, invert equation 2:

$$P_{D(max)} = \Delta T_{max} \div R_{\theta JA} = 15°\text{C} \div 126°\text{C/W} = 119\text{ mW}$$

Finally, invert equation 1 with respect to voltage:

$$V_{CC(est)} = P_{D(max)} \div I_{CC(max)} = 119\text{ mW} \div 12\text{ mA} = 9.92\text{ V}$$

The result indicates that, at T_A, the application and device can dissipate adequate amounts of heat at voltages $\leq V_{CC(est)}$.

Compare $V_{CC(est)}$ to $V_{CC(max)}$. If $V_{CC(est)} \leq V_{CC(max)}$, then reliable operation between $V_{CC(est)}$ and $V_{CC(max)}$ requires enhanced $R_{\theta JA}$. If $V_{CC(est)} \geq V_{CC(max)}$, then operation between $V_{CC(est)}$ and $V_{CC(max)}$ is reliable under these conditions.

This value applies only to the voltage drop across the ATS616 chip. If a protective series diode or resistor is used, the effective maximum supply voltage is increased. For example, when a standard diode with a 0.7 V drop is used:

$$V_{CC(max)} = 9.9\text{ V} + 0.7\text{ V} = 10.6\text{ V}$$

Allegro MicroSystems, Inc.
115 Northeast Cutoff, Box 15036
Worcester, Massachusetts 01615-0036 (508) 853-5000

Sensor Evaluation: EMC (Electromagnetic Compatibility)

Characterization Only

Test Name*	Reference Specification
ESD – Human Body Model	AEC-Q100-002
ESD – Machine Model	AEC-Q100-003
Conducted Transients	ISO 7637-1
Direct RF Injection	ISO 11452-7
Bulk Current Injection	ISO 11452-4
TEM Cell	ISO 11452-3

*Please contact Allegro MicroSystems for EMC performance

Mechanical Information

Component	Material	Description	Value
Sensor Package Material	Thermoset Epoxy	Maximum Temperature	170°C[a]
Leads	Copper		0.016 in. thick

[a]Temperature excursions of up to 225°C for 2 minutes or less are permitted.
[b]Industry accepted soldering techniques are acceptable for this package as long as the indicated maximum temperature is not exceeded. Additional soldering information is available on the Allegro Web site.

Allegro MicroSystems, Inc.
115 Northeast Cutoff, Box 15036
Worcester, Massachusetts 01615-0036 (508) 853-5000

Package SG Module

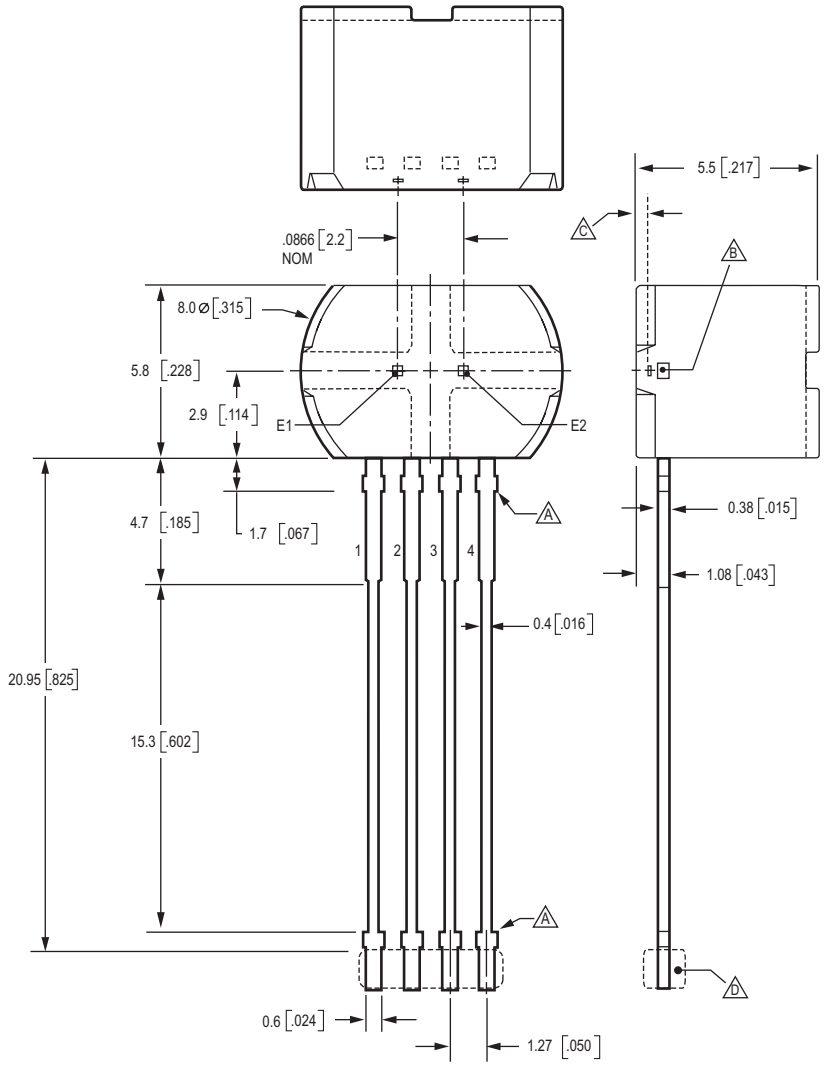

Preliminary dimensions, for reference only
Untoleranced dimensions are nominal.
Dimensions in millimeters
U.S. Customary dimensions (in.) in brackets, for reference only
Dimensions exclusive of mold flash, burrs, and dambar protrusions
Exact case and lead configuration at supplier discretion within limits shown

A Dambar removal protrusion
B Metallic protrusion, electrically connected to pin 4 and substrate (both sides)
C Active Area Depth
D Thermoplastic Molded Lead Bar for alignment during shipment

The products described herein are manufactured under one or more of the following U.S. patents: 5,045,920; 5,264,783; 5,442,283; 5,389,889; 5,581,179; 5,517,112; 5,619,137; 5,621,319; 5,650,719; 5,686,894; 5,694,038; 5,729,130; 5,917,320; and other patents pending.

Allegro MicroSystems, Inc. reserves the right to make, from time to time, such departures from the detail specifications as may be required to permit improvements in the performance, reliability, or manufacturability of its products. Before placing an order, the user is cautioned to verify that the information being relied upon is current.

Allegro products are not authorized for use as critical components in life-support devices or systems without express written approval.

The information included herein is believed to be accurate and reliable. However, Allegro MicroSystems, Inc. assumes no responsibility for its use; nor for any infringement of patents or other rights of third parties which may result from its use.

Copyright © 2005 Allegro MicroSystems, Inc.

Allegro MicroSystems, Inc.
115 Northeast Cutoff, Box 15036
Worcester, Massachusetts 01615-0036 (508) 853-5000