查询MC6809供应商 捷多邦，专业PCB打样工厂，24小时加急出货

8-Bit Microprocessing Unit

The MC6809 is a high-performance 8-bit microprocessor which supports modern programming techniques such as position independence, re-entrancy, and modular programming.

This third-generation addition to the M6800 Family has major architectural improvements which include additional registers, instructions, and addressing modes.

The basic instructions of any computer are greatly enhanced by the presence of powerful addressing modes. The MC6809 has the most complete set of addressing modes available on any 8-bit microprocessor.

The MC6809 has hardware and software features which make it an ideal processor for higher level language execution or standard controller applications.

MC6800 COMPATIBLE

- Hardware — Interfaces with All M6800 Peripherals
- Software — Upward Source Code Compatible Instruction Set and Addressing Modes

ARCHITECTURAL FEATURES

- Two 16-Bit Index Registers
- Two 16-Bit Indexable Stack Pointers
- Two 8-Bit Accumulators Can Be Concatenated To Form One 16-Bit Accumulator
- Direct Page Register Allows Direct Addressing Throughout Memory

HARDWARE FEATURES

- On-Chip Oscillator (Crystal Frequency = 4 × E)
- $\overline{DMA}$ $\overline{BREQ}$ Allows DMA Operation on Memory Refresh
- Fast Interrupt Request Input Stacks Only Condition Code Register and Program Counter
- MRDY Input Extends Data Access Times for Use with Slow Memory
- Interrupt Acknowledge Output Allows Vectoring by Devices
- Sync Acknowledge Output Allows for Synchronization to External Event
- Single Bus-Cycle $\overline{RESET}$
- Single 5-Volt Supply Operation
- $\overline{NMI}$ Inhibited After $\overline{RESET}$ Until After First Load of Stack Pointer
- Early Address Valid Allows Use with Slower Memories
- Early Write Data for Dynamic Memories

SOFTWARE FEATURES

- 10 Addressing Modes
  - — 6800 Upward Compatible Addressing Modes
  - — Direct Addressing Anywhere in Memory Map
  - — Long Relative Branches
  - — Program Counter Relative
  - — True Indirect Addressing
  - — Expanded Indexed Addressing:
    0-, 5-, 8-, or 16-Bit Constant Offsets
    8- or 16-Bit Accumulator Offsets
    Auto Increment Decrement by 1 or 2
- Improved Stack Manipulation
- 1464 Instructions with Unique Addressing Modes
- 8 × 8 Unsigned Multiply
- 16-Bit Arithmetic
- Transfer/Exchange All Registers
- Push/Pull Any Registers or Any Set of Registers
- Load Effective Address

This document contains information on a new product. Specifications and information herein are subject to change without notice.

找PDF 维库一下 pdf.dzsc.com

MAXIMUM RATINGS

Rating	Symbol	Value	Unit
Supply Voltage	V_{CC}	−0.3 to +7.0	V
Input Voltage	V_{in}	−0.3 to +7.0	V
Operating Temperature Range MC6809, MC68A09, MC68B09 MC6809C, MC68A09C, MC68B09C	T_A	T_L to T_H 0 to +70 −40 to +85	°C
Storage Temperature Range	T_{stg}	−55 to +150	°C

This device contains circuitry to protect the inputs against damage due to high static voltages or electric fields; however, it is advised that normal precautions be taken to avoid application of any voltage higher than maximum rated voltages to this high impedance circuit. Reliability of operation is enhanced if unused inputs are tied to an appropriate logic voltage levels (e.g., either V_{SS} or V_{CC}).

THERMAL CHARACTERISTICS

Characteristic	Symbol	Value	Unit
Thermal Resistance Cerdip Plastic	θ_{JA}	 60 100	C/W

POWER CONSIDERATIONS

The average chip-junction temperature, T_J, in °C can be obtained from:

$$T_J = T_A + (P_D \cdot \theta_{JA}) \quad (1)$$

where:

T_A = Ambient Temperature, °C
θ_{JA} = Package Thermal Resistance, Junction-to-Ambient, °C/W
P_D = $P_{INT} + P_{PORT}$
P_{INT} = $I_{CC} \times V_{CC}$, Watts — Chip Internal Power
P_{PORT} = Port Power Dissipation, Watts — User Determined

For most applications $P_{PORT} < P_{INT}$ and can be neglected. P_{PORT} may become significant if the device is configured to drive Darlington bases or sink LED loads.

An approximate relationship between P_D and T_J (if P_{PORT} is neglected) is:

$$P_D = K \div (T_J + 273°C) \quad (2)$$

Solving equations (1) and (2) for K gives:

$$K = P_D \cdot (T_A + 273°C) + \theta_{JA} \cdot P_D^2 \quad (3)$$

where K is a constant pertaining to the particular part. K can be determined from equation (3) by measuring P_D (at equilibrium) for a known T_A. Using this value of K, the values of P_D and T_J can be obtained by solving equations (1) and (2) iteratively for any value of T_A.

ELECTRICAL CHARACTERISTICS (V_{CC} = 5.0 V ±5%, V_{SS} = 0, T_A = T_L to T_H unless otherwise noted)

Characteristic		Symbol	Min	Typ	Max	Unit
Input High Voltage	Logic, EXTAL $\overline{RESET}$	V_{IH} V_{IHR}	V_{SS} + 2.0 V_{SS} + 4.0	– –	V_{CC} V_{CC}	V
Input Low Voltage	Logic, EXTAL, $\overline{RESET}$	V_{IL}	V_{SS} − 0.3	–	V_{SS} + 0.8	V
Input Leakage Current (V_{in} = 0 to 5.25 V, V_{CC} = max)	Logic	I_{in}	–	–	2.5	μA
dc Output High Voltage (I_{Load} = −205 μA, V_{CC} = min) (I_{Load} = −145 μA, V_{CC} = min) (I_{Load} = −100 μA, V_{CC} = min)	 D0-D7 A0-A15, R/$\overline{W}$, Q, E BA, BS	V_{OH}	 V_{SS} + 2.4 V_{SS} + 2.4 V_{SS} + 2.4	 – – –	 – – –	V
dc Output Low Voltage (I_{Load} = 2.0 mA, V_{CC} = min)		V_{OL}	–	–	V_{SS} + 0.5	V
Internal Power Dissipation (Measured at T_A = 0°C in Steady State Operation)		P_{INT}	–	–	1.0	W
Capacitance * (V_{in} = 0, T_A = 25°C, f = 1.0 MHz)	 D0-D7, $\overline{RESET}$ Logic Inputs, EXTAL, XTAL A0-A15, R/$\overline{W}$, BA, BS	 C_{in} C_{out}	 – – –	 10 10 –	 15 15 15	 pF pF
Frequency of Operation (Crystal or External Input)	MC6809 MC68A09 MC68B09	f_{XTAL}	0.4 0.4 0.4	– – –	4 6 8	MHz
Hi-Z (Off State) Input Current (V_{in} = 0.4 to 2.4 V, V_{CC} = max)	D0-D7 A0-A15, R/$\overline{W}$	I_{TSI}	– –	2.0 –	10 100	μA

* Capacitances are periodically tested rather than 100% tested.

FIGURE 1 — BUS TIMING

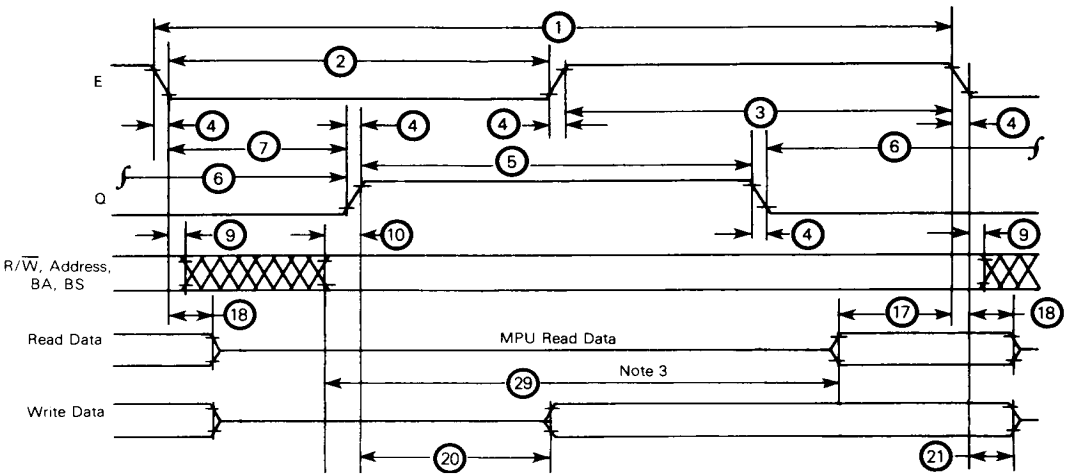

BUS TIMING CHARACTERISTICS (See Notes 1 and 2)

Ident. Number	Characteristics	Symbol	MC6809		MC68A09		MC68B09		Unit
			Min	Max	Min	Max	Min	Max	
1	Cycle Time (See Note 5)	t_{cyc}	1.0	10	0.667	10	0.5	10	μs
2	Pulse Width, E Low	PW_{EL}	430	5000	280	5000	210	5000	ns
3	Pulse Width, E High	PW_{EH}	450	15500	280	15700	220	15700	ns
4	Clock Rise and Fall Time	t_r, t_f	–	25	–	25	–	20	ns
5	Pulse Width, Q High	PW_{QH}	430	5000	280	5000	210	5000	ns
6	Pulse Width, Q Low	PW_{QL}	450	15500	280	15700	220	15700	ns
7	Delay Time, E to Q Rise	t_{AVS}	200	250	130	165	80	125	ns
9	Address Hold Time* (See Note 4)	t_{AH}	20	–	20	–	20	–	ns
10	BA, BS, R/$\overline{W}$, and Address Valid Time to Q Rise	t_{AQ}	50	–	25	–	15	–	ns
17	Read Data Setup Time	t_{DSR}	80	–	60	–	40	–	ns
18	Read Data Hold Time*	t_{DHR}	10	–	10	–	10	–	ns
20	Data Delay Time from Q	t_{DDQ}	–	200	–	140	–	110	ns
21	Write Data Hold Time*	t_{DHW}	30	–	30	–	30	–	ns
29	Usable Access Time (See Note 3)	t_{ACC}	695	–	440	–	330	–	ns
	Processor Control Setup Time (MRDY, Interrupts, $\overline{DMA}$/$\overline{BREQ}$, $\overline{HALT}$, $\overline{RESET}$) (Figures 6, 8, 9, 10, 12, and 13)	t_{PCS}	200	–	140	–	110	–	ns
	Crystal Oscillator Start Time (Figures 6 and 7)	t_{RC}	–	100	–	100	–	100	ms
	Processor Control Rise and Fall Time (Figures 6 and 8)	t_{PCr}, t_{PCf}	–	100	–	100	–	100	ns

*Address and data hold times are periodically tested rather than 100% tested.

NOTES:
1. Voltage levels shown are V_L = 0.4 V, V_H = 2.4 V, unless otherwise specified.
2. Measurement points shown are 0.8 V and 2.0 V, unless otherwise specified.
3. Usable access time is computed by: 1 − 4 − 7 max + 10 − 17.
4. Hold time (9) for BA and BS is not specified.
5. Maximum t_{cyc} during MRDY or DMA/BREQ is 16 μs.
6. MC6809 − 1.0 MHz, MC68A09 − 1.5 MHz, MC68B09 − 2.0 MHz.

FIGURE 2 — MC6809 EXPANDED BLOCK DIAGRAM

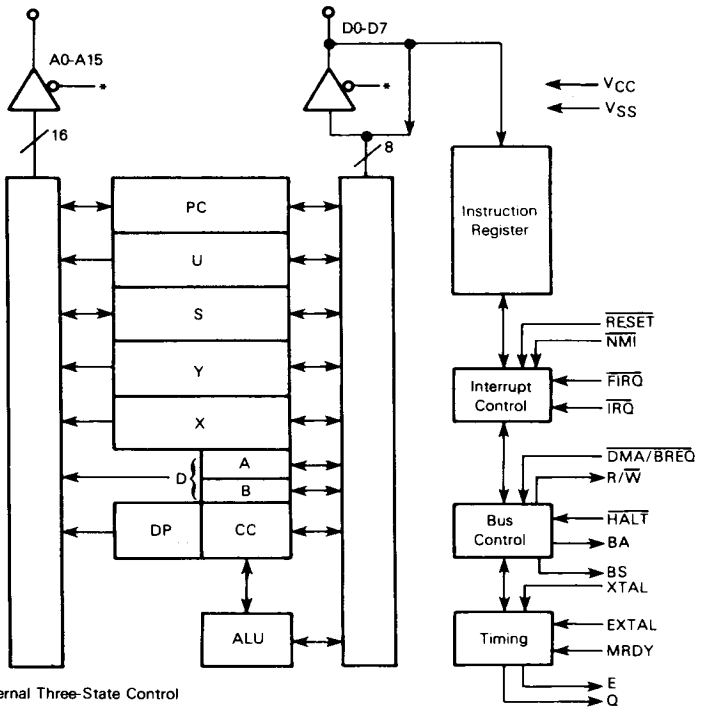

FIGURE 3 — BUS TIMING TEST LOAD

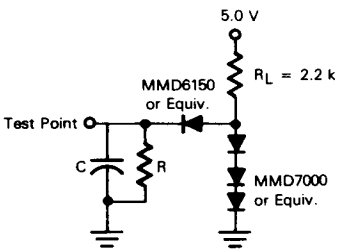

C = 30 pF for BA, BS
130 pF for D0-D7, E, Q
90 pF for A0-A15, R/W

R = 11.7 kΩ for D0-D7
16.5 kΩ for A0-A15, E, Q, R/W
24 kΩ for BA, BS

PROGRAMMING MODEL

As shown in Figure 4, the MC6809 adds three registers to the set available in the MC6800. The added registers include a direct page register, the user stack pointer, and a second index register.

ACCUMULATORS (A, B, D)

The A and B registers are general purpose accumulators which are used for arithmetic calculations and manipulation of data.

Certain instructions concatenate the A and B registers to form a single 16-bit accumulator. This is referred to as the D register, and is formed with the A register as the most significant byte.

DIRECT PAGE REGISTER (DP)

The direct page register of the MC6809 serves to enhance the direct addressing mode. The content of this register appears at the higher address outputs (A8-A15) during direct addressing instruction execution. This allows the direct mode to be used at any place in memory, under program control. To ensure M6800 compatibility, all bits of this register are cleared during processor reset.

FIGURE 4 — PROGRAMMING MODEL OF THE MICROPROCESSING UNIT

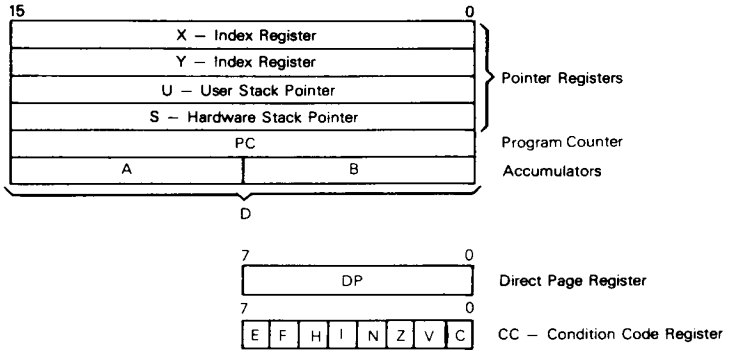

3

INDEX REGISTERS (X, Y)

The index registers are used in indexed mode of addressing. The 16-bit address in this register takes part in the calculation of effective addresses. This address may be used to point to data directly or may be modified by an optional constant or register offset. During some indexed modes, the contents of the index register are incremented or decremented to point to the next item of tabular type data. All four pointer registers (X, Y, U, S) may be used as index registers.

STACK POINTER (U,S)

The hardware stack pointer (S) is used automatically by the processor during subroutine calls and interrupts. The stack pointers of the MC6809 point to the top of the stack, in contrast to the MC6800 stack pointer, which pointed to the next free location on the stack. The user stack pointer (U) is controlled exclusively by the programmer. This allows arguments to be passed to and from subroutines with ease. Both stack pointers have the same indexed mode addressing capabilities as the X and Y registers, but also support **Push** and **Pull** instructions. This allows the MC6809 to be used efficiently as a stack processor, greatly enhancing its ability to support higher level languages and modular programming.

PROGRAM COUNTER

The program counter is used by the processor to point to the address of the next instruction to be executed by the processor. Relative addressing is provided allowing the program counter to be used like an index register in some situations.

CONDITION CODE REGISTER

The condition code register defines the state of the processor at any given time. See Figure 5.

FIGURE 5 — CONDITION CODE REGISTER FORMAT

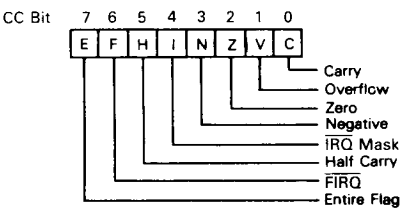

CONDITION CODE REGISTER DESCRIPTION

CARRY FLAG (C)

Bit 0 is the carry flag, and is usually the carry from the binary ALU. C is also used to represent a 'borrow' from subtract-like instructions (CMP, NEG, SUB, SBC) and is the complement of the carry from the binary ALU.

OVERFLOW FLAG (V)

Bit 1 is the overflow flag, and is set to a one by an operation which causes a signed twos complement arithmetic overflow. This overflow is detected in an operation in which the carry from the MSB in the ALU does not match the carry from the MSB-1.

ZERO FLAG (Z)

Bit 2 is the zero flag, and is set to a one if the result of the previous operation was identically zero.

NEGATIVE FLAG (N)

Bit 3 is the negative flag, which contains exactly the value of the MSB of the result of the preceding operation. Thus, a negative twos-complement result will leave N set to a one.

$\overline{IRQ}$ MASK (I)

Bit 4 is the $\overline{IRQ}$ mask bit. The processor will not recognize interrupts from the $\overline{IRQ}$ line if this bit is set to a one. $\overline{NMI}$, $\overline{FIRQ}$, $\overline{IRQ}$, $\overline{RESET}$, and SWI all set I to a one. SWI2 and SWI3 do not affect I.

HALF CARRY (H)

Bit 5 is the half-carry bit, and is used to indicate a carry from bit 3 in the ALU as a result of an 8-bit addition only (ADC or ADD). This bit is used by the DAA instruction to perform a BCD decimal add adjust operation. The state of this flag is undefined in all subtract-like instructions.

$\overline{FIRQ}$ MASK (F)

Bit 6 is the $\overline{FIRQ}$ mask bit. The processor will not recognize interrupts from the $\overline{FIRQ}$ line if this bit is a one. $\overline{NMI}$, $\overline{FIRQ}$, SWI, and $\overline{RESET}$ all set F to a one. $\overline{IRQ}$, SWI2, and SWI3 do not affect F.

ENTIRE FLAG (E)

Bit 7 is the entire flag, and when set to a one indicates that the complete machine state (all the registers) was stacked, as opposed to the subset state (PC and CC). The E bit of the stacked CC is used on a return from interrupt (RTI) to determine the extent of the unstacking. Therefore, the current E left in the condition code register represents past action.

PIN DESCRIPTIONS

POWER (V_{SS}, V_{CC})

Two pins are used to supply power to the part: V_{SS} is ground or 0 volts, while V_{CC} is +5.0 V ±5%.

ADDRESS BUS (A0-A15)

Sixteen pins are used to output address information from the MPU onto the address bus. When the processor does not require the bus for a data transfer, it will output address $FFFF_{16}$, R/$\overline{W}$ = 1, and BS = 0; this is a "dummy access" or $\overline{VMA}$ cycle. Addresses are valid on the rising edge of Q. All address bus drivers are made high impedance when output bus available (BA) is high. Each pin will drive one Schottky TTL load or four LSTTL loads, and 90 pF.

DATA BUS (D0-D7)

These eight pins provide communication with the system bidirectional data bus. Each pin will drive one Schottky TTL load or four LSTTL loads, and 130 pF.

READ/WRITE (R/$\overline{W}$)

This signal indicates the direction of data transfer on the data bus. A low indicates that the MPU is writing data onto the data bus. R/$\overline{W}$ is made high impedance when BA is high. R/$\overline{W}$ is valid on the rising edge of Q.

$\overline{RESET}$

A low level on this Schmitt-trigger input for greater than one bus cycle will reset the MPU, as shown in Figure 6. The reset vectors are fetched from locations $FFFE_{16}$ and $FFFF_{16}$ (Table 1) when interrpt acknowledge is true, ($\overline{BA}$•BS = 1). During initial power on, the $\overline{RESET}$ line should be held low until the clock oscillator is fully operational. See Figure 7.

Because the $\overline{RESET}$ pin has a Schmitt-trigger input with a threshold voltage higher than that of standard peripherals, a simple R C network may be used to reset the entire system. This higher threshold voltage ensures that all peripherals are out of the reset state before the processor.

$\overline{HALT}$

A low level on this input pin will cause the MPU to stop running at the end of the present instruction and remain halted indefinitely without loss of data. When halted, the BA output is driven high indicating the buses are high impedance. BS is also high which indicates the processor is in the halt or bus grant state. While halted, the MPU will not respond to external real-time requests ($\overline{FIRQ}$, $\overline{IRQ}$) although $\overline{DMA}$ $\overline{BREQ}$ will always be accepted, and $\overline{NMI}$ or $\overline{RESET}$ will be latched for later response. During the halt state, Q and E continue to run normally. If the MPU is not runnig, ($\overline{RESET}$, $\overline{DMA}$ $\overline{BREQ}$), a halted state (BA•BS = 1) can be achieved by pulling $\overline{HALT}$ low while $\overline{RESET}$ is still low. If $\overline{DMA}$ $\overline{BREQ}$ and $\overline{HALT}$ are both pulled low, the processor will reach the last cycle of the instruction (by reverse cycle stealing) where the machine will then become halted. See Figure 8.

BUS AVAILABLE, BUS STATUS (BA, BS)

The bus available output is an indication of an internal control signal which makes the MOS buses of the MPU high impedance. This signal does not imply that the bus will be available for more than one cycle. When BA goes low, a dead cycle will elapse before the MPU acquires the bus.

The bus status output signal, when decoded with BA, represents the MPU state (valid with leading edge of Q).

MPU State		MPU State Definition
BA	BS	
0	0	Normal (Running)
0	1	Interrupt or Reset Acknowledge
1	0	Sync Acknowledge
1	1	Halt or Bus Grant Acknowledge

FIGURE 6 – $\overline{\text{RESET}}$ TIMING

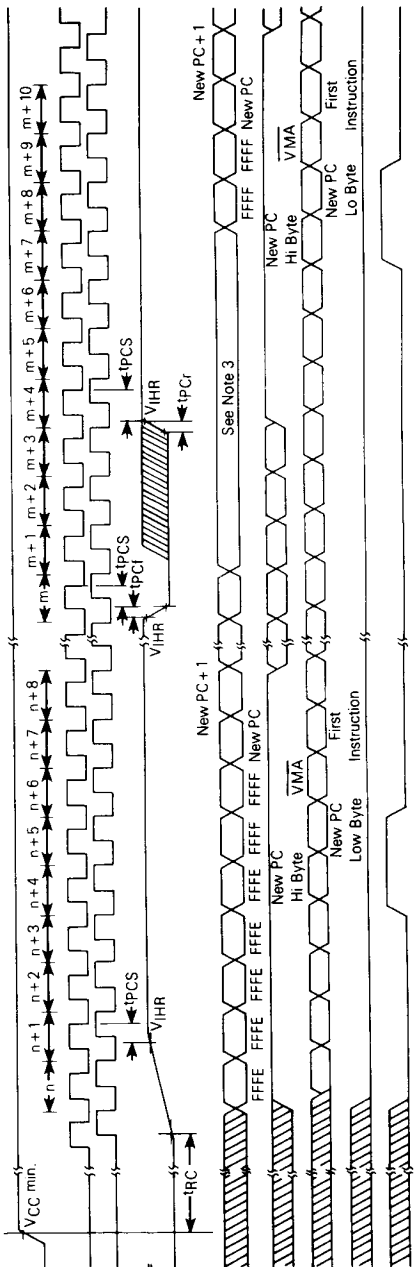

NOTES:
1. Parts with date codes prefixed by 7F or 5A will come out of $\overline{\text{RESET}}$ one cycle sooner than shown.
2. Timing measurements are referenced to and from a low voltage of 0.8 volts and a high voltage of 2.0 volts, unless otherwise noted.
3. FFFE appears on the bus during $\overline{\text{RESET}}$ low time. Following the active transition of the $\overline{\text{RESET}}$ line, three more FFFE cycles will appear followed by the vector fetch.

3

FIGURE 7 — CRYSTAL CONNECTIONS AND OSCILLATOR START UP

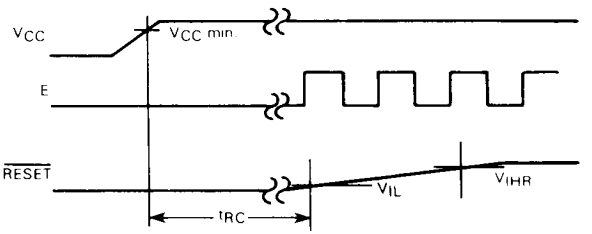

NOTE: Waveform measurements for all inputs and outputs are specified at logic high 2.0 V and logic low 0.8 V unless otherwise specified.

Y1	C_{in}	C_{out}
8 MHz	18 pF	18 pF
6 MHz	20 pF	20 pF
4 MHz	24 pF	24 pF

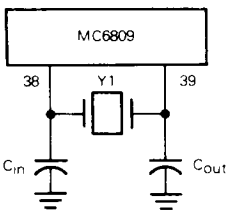

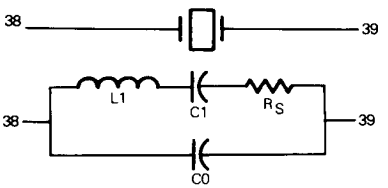

Nominal Crystal Parameters

	3.58 MHz	4.00 MHz	6.0 MHz	8.0 MHz
R_S	60 Ω	50 Ω	30-50 Ω	20-40 Ω
C0	3.5 pF	6.5 pF	4-6 pF	4-6 pF
C1	0.015 pF	0.025 pF	0.01-0.02 pF	0.01-0.02 pF
Q	>40 k	>30 k	>20 k	>20 k

All parameters are 10%

NOTE: These are representative AT-cut crystal parameters only. Crystals of other types of cut may also be used.

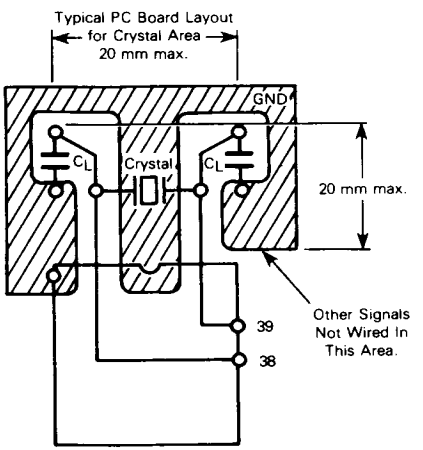

FIGURE 8 — $\overline{HALT}$ AND SINGLE INSTRUCTION EXECUTION FOR SYSTEM DEBUG

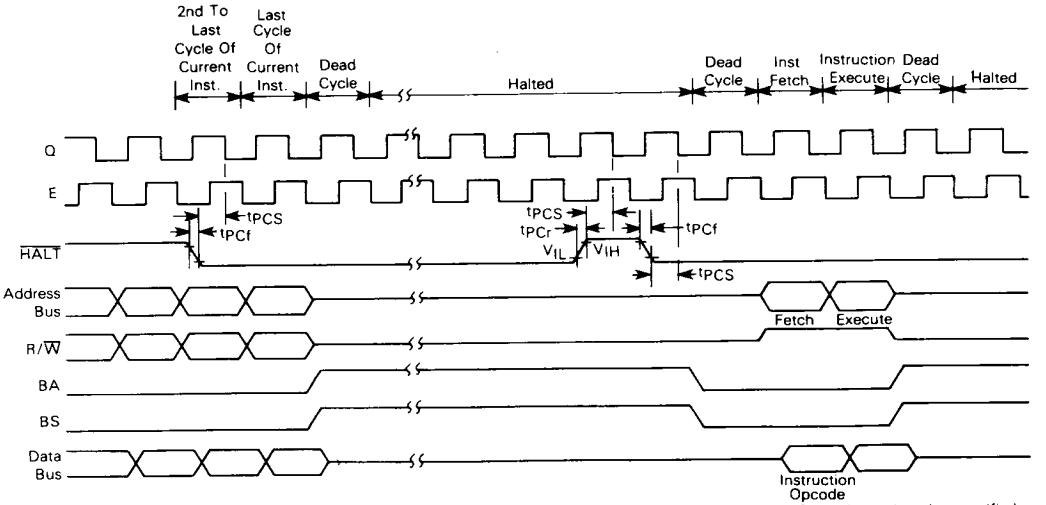

NOTE: Waveform measurements for all inputs and outputs are specified at logic high 2.0 V and logic low 0.8 V unless otherwise specified.

INTERRUPT ACKNOWLEDGE is indicated during both cycles of a hardware-vector-fetch ($\overline{RESET}$, $\overline{NMI}$, $\overline{FIRQ}$, $\overline{IRQ}$, SWI, SWI2, SWI3). This signal, plus decoding of the lower four address lines, can provide the user with an indication of which interrupt level is being serviced and allow vectoring by device. See Table 1.

SYNC ACKNOWLEDGE is indicated while the MPU is waiting for external synchronization on an interrupt line.

HALT/BUS GRANT is true when the MC6809 is in a halt or bus grant condition.

TABLE 1 — MEMORY MAP FOR INTERRUPT VECTORS

Memory Map For Vector Locations		Interrupt Vector Description
MS	LS	
FFFE	FFFF	$\overline{RESET}$
FFFC	FFFD	$\overline{NMI}$
FFFA	FFFB	SWI
FFF8	FFF9	$\overline{IRQ}$
FFF6	FFF7	$\overline{FIRQ}$
FFF4	FFF5	SWI2
FFF2	FFF3	SWI3
FFF0	FFF1	Reserved

NON MASKABLE INTERRUPT ($\overline{NMI}$)*

A negative transition on this input requests that a non-maskable interrupt sequence be generated. A non-maskable interrupt cannot be inhibited by the program. It also has a higher priority than $\overline{FIRQ}$, $\overline{IRQ}$, or software interrupts. During recognition of an $\overline{NMI}$, the entire machine state is saved on the hardware stack. After reset, an $\overline{NMI}$ will not be recognized until the first program load of the hardware stack pointer (S). The pulse width of $\overline{NMI}$ low must be at least one E cycle. If the $\overline{NMI}$ input does not meet the minimum set up with respect to Q, the interrupt will not be recognized until the next cycle. See Figure 9.

FAST-INTERRUPT REQUEST ($\overline{FIRQ}$)*

A low level on this input pin will initiate a fast interrupt sequence, provided its mask bit (F) in the CC is clear. This sequence has priority over the standard interrupt request ($\overline{IRQ}$), and is fast in the sense that it stacks only the contents of the condition code register and the program counter. The interrupt service routine should clear the source of the interrupt before doing an RTI. See Figure 10.

INTERRUPT REQUEST ($\overline{IRQ}$)*

A low level input on this pin will initiate an interrupt request sequence provided the mask bit (I) in the CC is clear. Since $\overline{IRQ}$ stacks the entire machine state, it provides a slower response to interrupts than $\overline{FIRQ}$. $\overline{IRQ}$ also has a lower priority than $\overline{FIRQ}$. Again, the interrupt service routine should clear the source of the interrupt before doing an RTI. See Figure 9.

*$\overline{NMI}$, $\overline{FIRQ}$, and $\overline{IRQ}$ requests are sampled on the falling edge of Q. One cycle is required for synchronization before these interrupts are recognized. The pending interrupt(s) will not be serviced until completion of the current instruction unless a SYNC or CWAI condition is present. If $\overline{IRQ}$ and $\overline{FIRQ}$ do not remain low until completion of the current instruction they may not be recognized. However, $\overline{NMI}$ is latched and need only remain low for one cycle. No interrupts are recognized or latched between the falling edge of $\overline{RESET}$ and the rising edge of BS indicating $\overline{RESET}$ acknowledge.

3

FIGURE 10 — $\overline{FIRQ}$ INTERRUPT TIMING

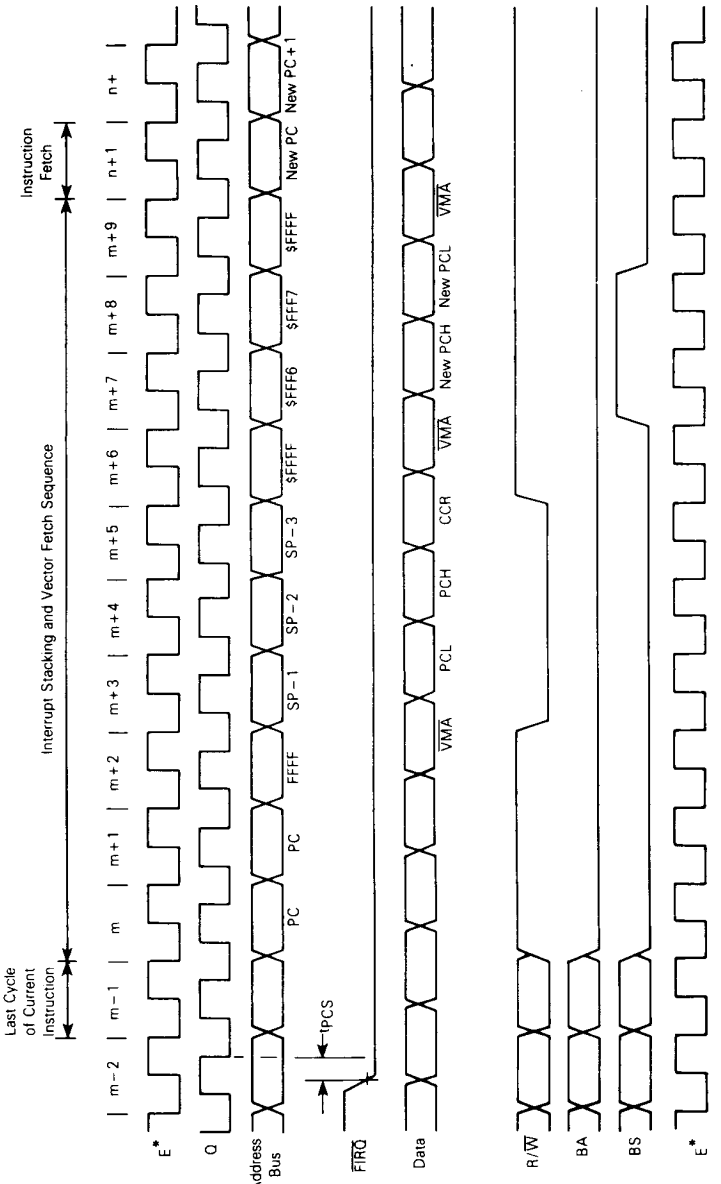

NOTE: Waveform measurements for all inputs and outputs are specified at logic high = 2.0 V and logic low = 0.8 V unless otherwise specified.
*E clock shown for reference only.

FIGURE 9 — $\overline{IRQ}$ AND $\overline{NMI}$ INTERRUPT TIMING

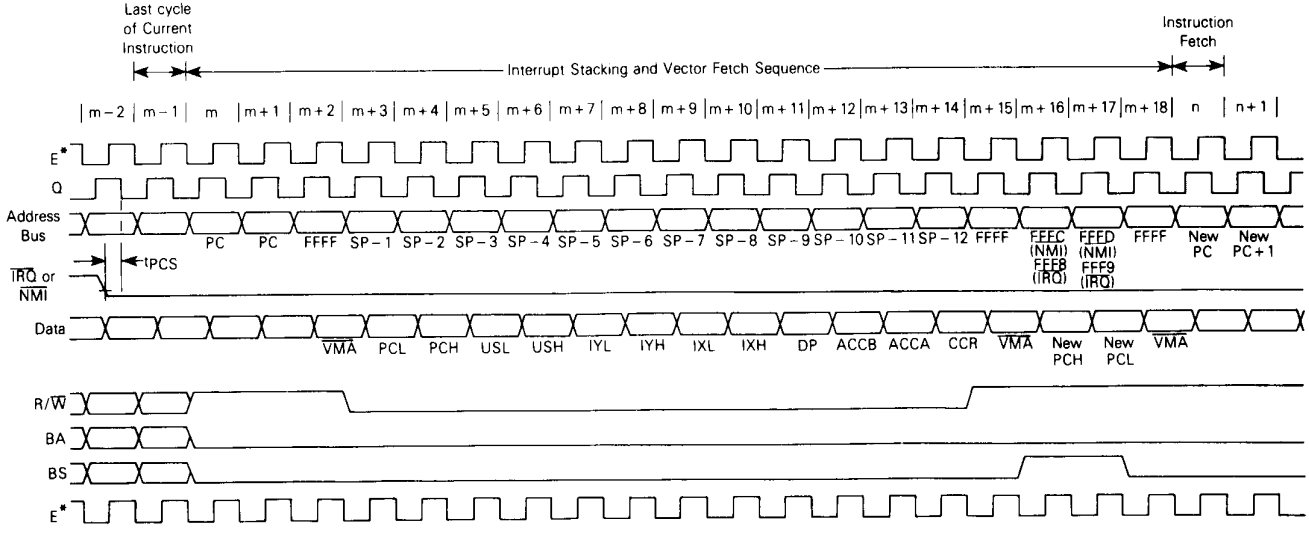

NOTE: Waveform measurements for all inputs and outputs are specified at logic high = 2.0 V and logic low = 0.8 V unless otherwise specified.
*E clock shown for reference only.

XTAL, EXTAL

These inputs are used to connect the on-chip oscillator to an external parallel-resonant crystal. Alternately, the pin EXTAL may be used as a TTL level input for external timing by grounding XTAL. The crystal or external frequency is four times the bus frequency. See Figure 7. Proper RF layout techniques should be observed in the layout of printed circuit boards.

E, Q

E is similar to the MC6800 bus timing signal phase 2; Q is a quadrature clock signal which leads E. Q has no parrallel on the MC6800. Addresses from the MPU will be valid with the leading edge of Q. Data is latched on the falling edge of E. Timing for E and Q is shown in Figure 11.

MRDY

This input control signal allows stretching of E and Q to extend data-access time. E and Q operate normally while MRDY is high. When MRDY is low, E and Q may be stretched in integral multiples of quarter (¼) bus cycles, thus allowing interface to slow memories, as shown in Figure 12(a). During non-valid memory access ($\overline{VMA}$ cycles), MRDY has no effect on stretching E and Q; this inhibits slowing the processor during "don't care" bus accesses. MRDY may also be used to stretch clocks (for slow memory) when bus control has been transferred to an external device (through the use of $\overline{HALT}$ and $\overline{DMA/BREQ}$).

$\overline{DMA/BREQ}$

The $\overline{DMA/BREQ}$ input provides a method of suspending execution and acquiring the MPU bus for another use, as shown in Figure 13. Typical uses include DMA and dynamic memory refresh.

A low level on this pin will stop instruction execution at the end of the current cycle unless pre-empted by self-refresh. The MPU will acknowledge $\overline{DMA/BREQ}$ by setting BA and BS to a one. The requesting device will now have up to 15 bus cycles before the MPU retrieves the bus for self-refresh. Self-refresh requires one bus cycle with a leading and trailing dead cycle. See Figure 14. The self-refresh counter is only cleared if $\overline{DMA/BREQ}$ is inactive for two or more MPU cycles.

Typically, the DMA controller will request to use the bus by asserting $\overline{DMA/BREQ}$ pin low on the leading edge of E. When the MPU replies by setting BA and BS to a one, that cycle will be a dead cycle used to transfer bus mastership to the DMA controller.

False memory accesses may be prevented during any dead cycles by developing a system $\overline{DMA}\,\overline{VMA}$ signal which is LOW in any cycle when BA has changed.

When BA goes low (either as a result of $\overline{DMA}\,\overline{BREQ}$ HIGH or MPU self-refresh), the DMA device should be taken off the bus. Another dead cycle will elapse before the MPU accesses memory to allow transfer of bus mastership without contention.

MPU OPERATION

During normal operation, the MPU fetches an instruction from memory and then executes the requested function. This sequence begins after $\overline{RESET}$ and is repeated indefinitely unless altered by a special instruction or hardware occurrence. Software instructions that alter normal MPU operation are: SWI, SWI2, SWI3, CWAI, RTI, and SYNC. An interrupt, $\overline{HALT}$, or $\overline{DMA}\,\overline{BREQ}$ can also alter the normal execution of instructions. Figure 15 is the flowchart for the MC6809.

FIGURE 11 — E/Q RELATIONSHIP

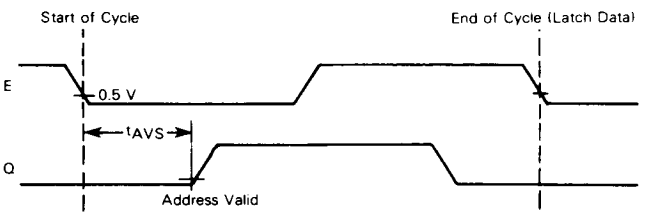

NOTE: Waveform measurements for all inputs and outputs are specified at logic high 2.0 V and logic low 0.8 V unless otherwise specified.

FIGURE 12 — MRDY TIMING AND SYNCHRONIZATION

(a) Timing

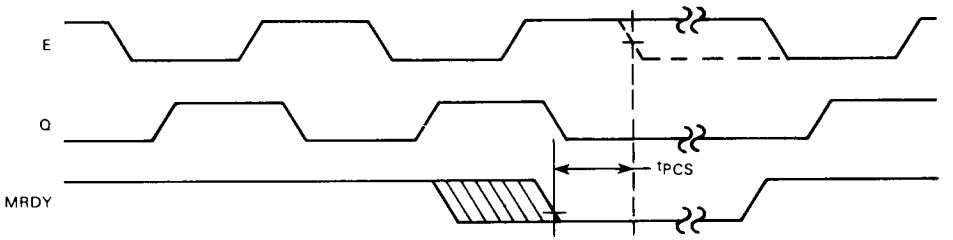

3

(b) Synchronization

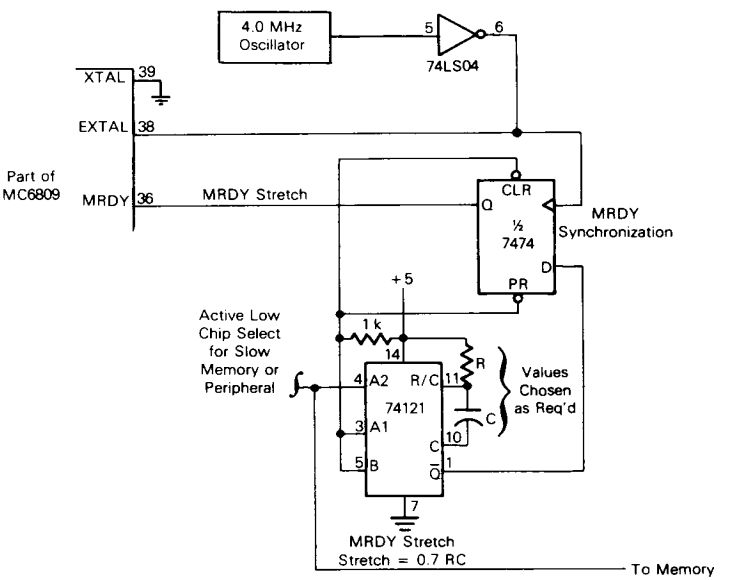

FIGURE 13 — TYPICAL DMA TIMING (<14 CYCLES)

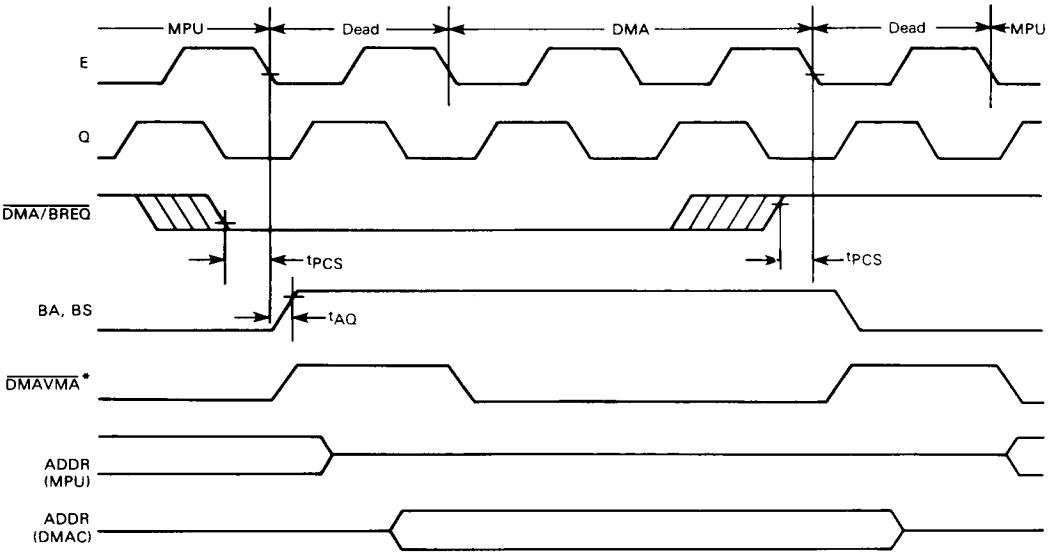

FIGURE 14 — AUTO-REFRESH DMA TIMING (>14 CYCLES)
(REVERSE CYCLE STEALING)

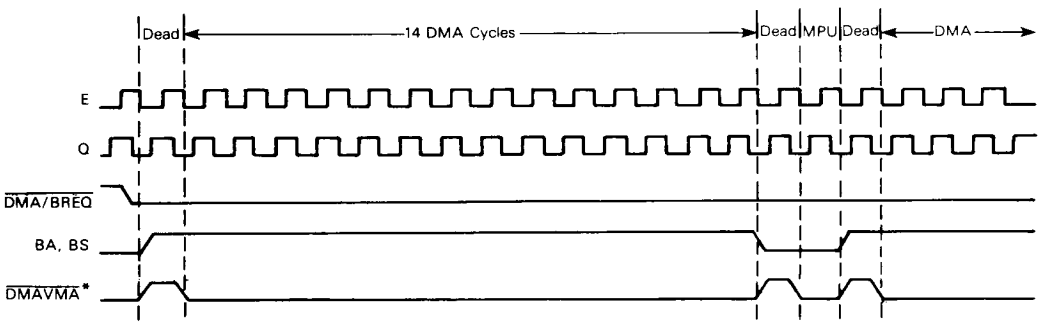

* DMAVMA is a signal which is developed externally, but is a system requirement for DMA. Refer to Application Note AN-820.

NOTE: Waveform measurements for all inputs and outputs are specified at logic high 2.0 V and logic low 0.8 V unless otherwise specified.

FIGURE 15 — FLOWCHART FOR MC6809 INSTRUCTIONS

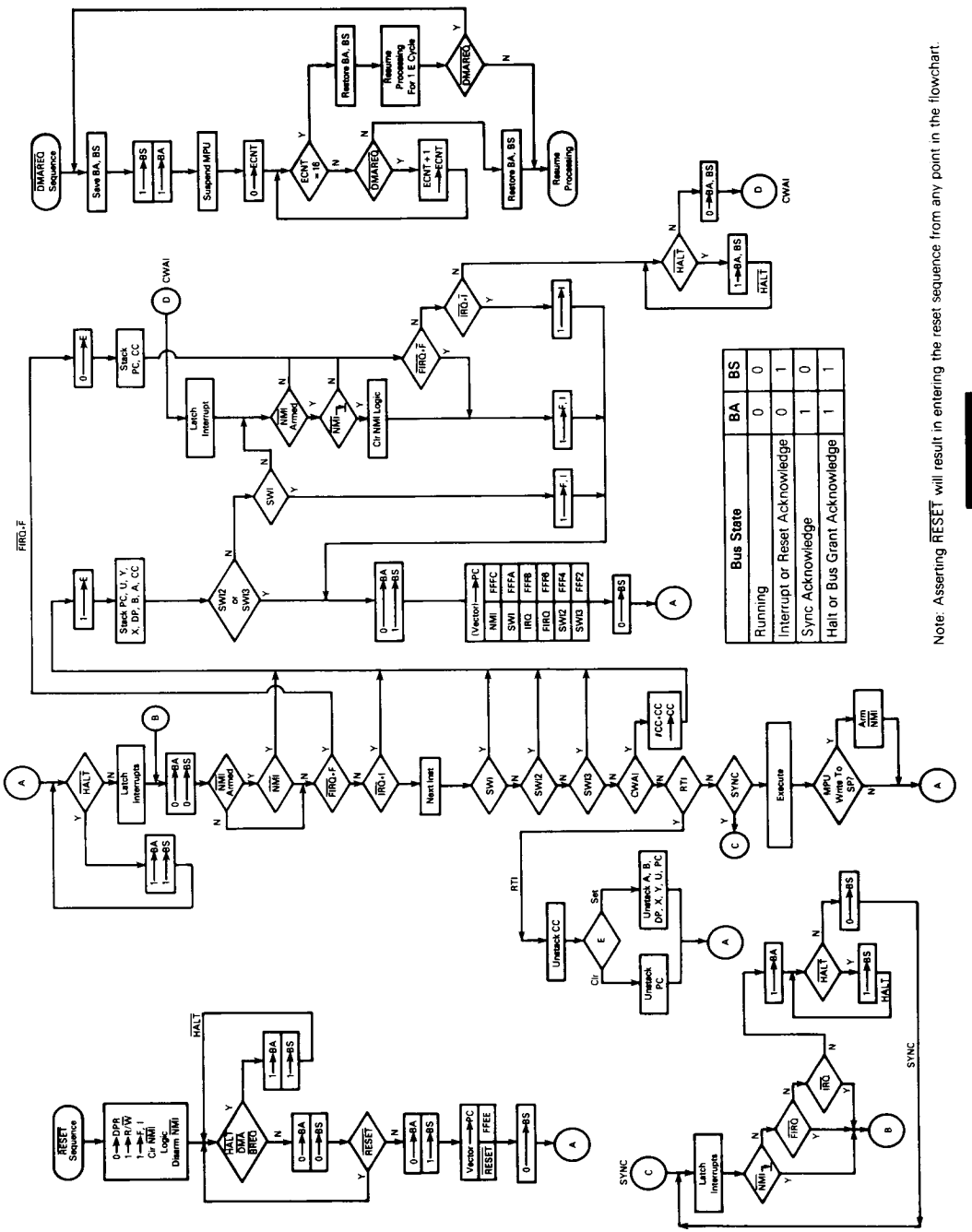

Bus State	BA	BS
Running	0	0
Interrupt or Reset Acknowledge	0	1
Sync Acknowledge	1	0
Halt or Bus Grant Acknowledge	1	1

Note: Asserting RESET will result in entering the reset sequence from any point in the flowchart.

3

ADDRESSING MODES

The basic instructions of any computer are greatly enhanced by the presence of powerful addressing modes. The MC6809 has the most complete set of addressing modes available on any microcomputer. For example, the MC6809 has 59 basic instructions; however, it recognizes 1464 different variations of instructions and addressing modes. The addressing modes support modern programming techniques. The following addressing modes are available on the MC6809:

- Inherent (Includes Accumulator)
- Immediate
- Extended
  - Extended Indirect
- Direct
- Register
- Indexed
  - Zero-Offset
  - Constant Offset
  - Accumulator Offset
  - Auto Increment/Decrement
  - Indexed Indirect
- Relative
  - Short/Long Relative Branching
  - Program Counter Relative Addressing

3

INHERENT (INCLUDES ACCUMULATOR)

In this addressing mode, the opcode of the instruction contains all the address information necessary. Examples of inherent addressing are: ABX, DAA, SWI, ASRA, and CLRB.

IMMEDIATE ADDRESSING

In immediate addressing, the effective address of the data is the location immediately following the opcode (i.e., the data to be used in the instruction immediately following the opcode of the instruction). The MC6809 uses both 8- and 16-bit immediate values depending on the size of argument specified by the opcode. Examples of instructions with immediate addressing are:

```
LDA #$20
LDX #$F000
LDY #CAT
```

NOTE

signifies immediate addressing; $ signifies hexadecimal value.

EXTENDED ADDRESSING

In extended addressing, the contents of the two bytes immediately following the opcode fully specify the 16-bit effective address used by the instruction. Note that the address generated by an extended instruction defines an absolute address and is not position independent. Examples of extended addressing include:

```
LDA   CAT
STX   MOUSE
LDD   $2000
```

EXTENDED INDIRECT – As in the special case of indexed addressing (discussed below), one level of indirection may be added to extended addressing. In extended indirect, the two bytes following the postbyte of an indexed instruction contain the address of the data.

```
LDA   [CAT]
LDX   [$FFFE]
STU   [DOG]
```

DIRECT ADDRESSING

Direct addressing is similar to extended addressing except that only one byte of address follows the opcode. This byte specifies the lower eight bits of the address to be used. The upper eight bits of the address are supplied by the direct page register. Since only one byte of address is required in direct addressing, this mode requires less memory and executes faster than extended addressing. Of course, only 256 locations (one page) can be accessed without redefining the contents of the DP register. Since the DP register is set to $00 on reset, direct addressing on the MC6809 is compatible with direct addressing on the M6800. Indirection is not allowed in direct addressing. Some examples of direct addressing are:

```
LDA    $30
SETDP  $10 (assembler directive)
LDB    $1030
LDD    < CAT
```

NOTE

< is an assembler directive which forces direct addressing.

REGISTER ADDRESSING

Some opcodes are followed by a byte that defines a register or set of registers to be used by the instruction. This is called a postbyte. Some examples of register addressing are:

TFR	X, Y	Transfers X into Y
EXG	A, B	Exchanges A with B
PSHS	A, B, X, Y	Push Y, X, B and A onto S
PULU	X, Y, D	Pull D, X, and Y from U

INDEXED ADDRESSING

In all indexed addressing, one of the pointer registers (X, Y, U, S, and sometimes PC) is used in a calculation of the effective address of the operand to be used by the instruction. Five basic types of indexing are available and are discussed below. The postbyte of an indexed instruction specifies the basic type and variation of the addressing mode as well as the pointer register to be used. Figure 16 lists the legal formats for the postbyte. Table 2 gives the assembler form and the number of cycles and bytes added to the basic values for indexed addressing for each variation.

FIGURE 16 — INDEXED ADDRESSING POSTBYTE REGISTER BIT ASSIGNMENTS

Postbyte Register Bit								Indexed Addressing Mode
7	6	5	4	3	2	1	0	
0	R	R	d	d	d	d	d	EA = ,R + 5 Bit Offset
1	R	R	0	0	0	0	0	,R +
1	R	R	i	0	0	0	1	,R + +
1	R	R	0	0	0	1	0	, − R
1	R	R	i	0	0	1	1	, − − R
1	R	R	i	0	1	0	0	EA = ,R + 0 Offset
1	R	R	i	0	1	0	1	EA = ,R + ACCB Offset
1	R	R	i	0	1	1	0	EA = ,R + ACCA Offset
1	R	R	i	1	0	0	0	EA = ,R + 8 Bit Offset
1	R	R	i	1	0	0	1	EA = ,R + 16 Bit Offset
1	R	R	i	1	0	1	1	EA = ,R + D Offset
1	x	x	i	1	1	0	0	EA = ,PC + 8 Bit Offset
1	x	x	i	1	1	0	1	EA = ,PC + 16 Bit Offset
1	R	R	i	1	1	1	1	EA = [,Address]

Addressing Mode Field

Indirect Field
(Sign bit when b_7 = 0)

Register Field: RR
00 = X
01 = Y
10 = U
11 = S

x = Don't Care
d = Offset Bit
i = 0 = Not Indirect
1 = Indirect

ZERO-OFFSET INDEXED — In this mode, the selected pointer register contains the effective address of the data to be used by the instruction. This is the fastest indexing mode.

Examples are:

```
LDD  0, X
LDA  ,S
```

CONSTANT OFFSET INDEXED — In this mode, a two's-complement offset and the contents of one of the pointer registers are added to form the effective address of the operand. The pointer register's initial content is unchanged by the addition.

Three sizes of offset are available:

5-bit (−16 to −15)
8-bit (−128 to +128)
16-bit (−32768 to +32767)

The twos complement 5-bit offset is included in the postbyte and, therefore, is most efficient in use of bytes and cycles. The twos complement 8-bit offset is contained in a single byte following the postbyte. The twos complement 16-bit offset is in the two bytes following the postbyte. In most cases the programmer need not be cocerned with the size of this offset since the assembler will select the optimal size automatically.

Examples of constant-offset indexing are:

```
LDA  23,X
LDX  −2,S
LDY  300,X
LDU  CAT,Y
```

3

TABLE 2 — INDEXED ADDRESSING MODE

Type	Forms	Non Indirect				Indirect			
		Assembler Form	Postbyte Opcode	+ ~	+ #	Assembler Form	Postbyte Opcode	+ ~	+ #
Constant Offset From R	No Offset	,R	1RR00100	0	0	[,R]	1RR10100	3	0
(2s Complement Offsets)	5-Bit Offset	n, R	0RRnnnnn	1	0	defaults to 8-bit			
	8-Bit Offset	n, R	1RR01000	1	1	[n, R]	1RR11000	4	1
	16-Bit Offset	n, R	1RR01001	4	2	[n, R]	1RR11001	7	2
Accumulator Offset From R (2s Complement Offsets)	A Register Offset	A, R	1RR00110	1	0	[A, R]	1RR10110	4	0
	B Register Offset	B, R	1RR00101	1	0	[B, R]	1RR10101	4	0
	D Register Offset	D, R	1RR01011	4	0	[D, R]	1RR11011	7	0
Auto Increment/Decrement R	Increment By 1	,R+	1RR00000	2	0	not allowed			
	Increment By 2	,R+ +	1RR00001	3	0	[,R+ +]	1RR10001	6	0
	Decrement By 1	, − R	1RR00010	2	0	not allowed			
	Decrement By 2	, − − R	1RR00011	3	0	[, − − R]	1RR10011	6	0
Constant Offset From PC (2s Complement Offsets)	8-Bit Offset	n, PCR	1xx01100	1	1	[n, PCR]	1xx11100	4	1
	16-Bit Offset	n, PCR	1xx01101	5	2	[n, PCR]	1xx11101	8	2
Extended Indirect	16-Bit Address	—	—	—	—	[n]	10011111	5	2

R = X, Y, U, or S
x = Don't Care

RR:
00 = X
01 = Y
10 = U
11 = S

+ ~ and + # indicate the number of additional cycles and bytes for the particular variation.

ACCUMULATOR-OFFSET INDEXED – This mode is similar to constant offset indexed except that the twos-complement value in one of the accumulators (A, B, or D) and the contents of one of the pointer registers are added to form the effective address of the operand. The contents of both the accumulator and the pointer register are unchanged by the addition. The postbyte specifies which accumulator to use as an offset and no additional bytes are required. The advantage of an accumulator offset is that the value of the offset can be calculated by a program at run-time.

Some examples are:

```
LDA   B,Y
LDX   D,Y
LEAX  B,X
```

AUTO INCREMENT/DECREMENT INDEXED – In the auto increment addressing mode, the pointer register contains the address of the operand. Then, after the pointer register is used it is incremented by one or two. This addressing mode is useful in stepping through tables, moving data, or for the creation of software stacks. In auto decrement, the pointer register is decremented prior to use as the address of the data. The use of auto decrement is similar to that of auto increment; but the tables, etc., are scanned from the high to low addresses. The size of the increment/decrement can be either one or two to allow for tables of either 8- or 16-bit data to be accessed and is selectable by the programmer. The pre-decrement, post-increment nature of these modes allows them to be used to create additional software stacks that behave identically to the U and S stacks.

Some examples of the auto increment/decrement addressing modes are:

```
LDA   ,X+
STD   ,Y++
LDB   ,-Y
LDX   ,--S
```

Care should be taken in performing operations on 16-bit pointer registers (X, Y, U, S) where the same register is used to calculate the effective address.

Consider the following instruction:

STX 0,X++ (X initialized to 0)

The desired result is to store zero in locations $0000 and $0001, then increment X to point to $0002. In reality, the following occurs:

0→temp	calculate the EA; temp is a holding register
X+2→X	perform auto increment
X→(temp)	do store operation

INDEXED INDIRECT – All of the indexing modes, with the exception of auto increment/decrement by one or a ±4-bit offset, may have an additional level of indirection specified. In indirect addressing, the effective address is contained at the location specified by the contents of the index register plus any offset. In the example below, the A accumulator is loaded indirectly using an effective address calculated from the index register and an offset.

```
        Before Execution
        A=XX (don't care)
        X=$F000
$0100   LDA  [$10,X]     EA is now $F010

$F010   $F1              $F150 is now the
$F011   $50              new EA

$F150   $AA
        After Execution
        A=$AA Actual Data Loaded
        X=$F000
```

All modes of indexed indirect are included except those which are meaningless (e.g., auto increment/decrement by one indirect). Some examples of indexed indirect are:

```
LDA   [,X]
LDD   [10,S]
LDA   [B,Y]
LDD   [,X++]
```

RELATIVE ADDRESSING

The byte(s) following the branch opcode is (are) treated as a signed offset which may be added to the program counter. If the branch condition is true, then the calculated address (PC + signed offset) is loaded into the program counter. Program execution continues at the new location as indicated by the PC; short (one byte offset) and long (two bytes offset) relative addressing modes are available. All of memory can be reached in long relative addressing as an effective address is interpreted modulo 2^{16}. Some examples of relative addressing are:

```
        BEQ    CAT     (short)
        BGT    DOG     (short)
CAT     LBEQ   RAT     (long)
DOG     LBGT   RABBIT  (long)
        •
        •
        •
RAT     NOP
RABBIT  NOP
```

PROGRAM COUNTER RELATIVE – The PC can be used as the pointer register with 8- or 16-bit signed offsets. As in relative addressing, the offset is added to the current PC to create the effective address. The effective address is then used as the address of the operand or data. Program counter relative addressing is used for writing position independent programs. Tables related to a particular routine will maintain the same relationship after the routine is moved, if referenced relative to the program counter. Examples are:

```
LDA   CAT, PCR
LEAX  TABLE, PCR
```

Since program counter relative is a type of indexing, an additional level of indirection is available.

```
LDA   [CAT, PCR]
LDU   [DOG, PCR]
```

INSTRUCTION SET

The instruction set of the MC6809 is similar to that of the MC6800 and is upward compatible at the source code level. The number of opcodes has been reduced from 72 to 59, but because of the expanded architecture and additional addressing modes, the number of available opcodes (with different addressing modes) has risen from 197 to 1464.

Some of the new instructions are described in detail below.

PSHU/PSHS

The push instructions have the capability of pushing onto either the hardware stack (S) or user stack (U) any single register or set of registers with a single instruction.

PULU/PULS

The pull instructions have the same capability of the push instruction, in reverse order. The byte immediately following the push or pull opcode determines which register or registers are to be pushed or pulled. The actual push/pull sequence is fixed; each bit defines a unique register to push or pull, as shown below.

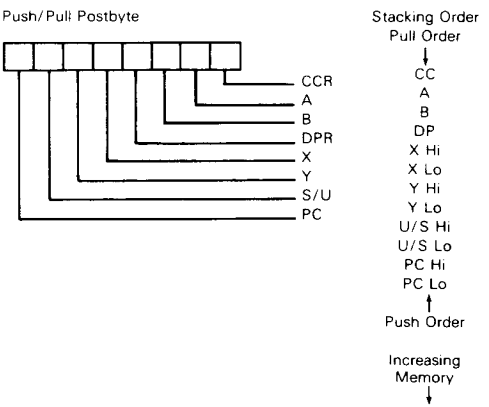

TFR/EXG

Within the MC6809, any register may be transferred to or exchanged with another or like size, i.e., 8 bit to 8 bit or 16 bit to 16 bit. Bits 4-7 of post byte define the source register, while bits 0-3 represent the destination register. These are denoted as follows:

Transfer/Exchange Postbyte

Source	Destination

Register Field

0000 = D (A:B)	1000 = A
0001 = X	1001 = B
0010 = Y	1010 = CCR
0011 = U	1011 = DPR
0100 = S	
0101 = PC	

NOTE

All other combinations are undefined and INVALID.

LEAX/LEAY/LEAU/LEAS

The LEA (load effective address) works by calculating the effective address used in an indexed instruction and stores that address value, rather than the data at that address, in a pointer register. This makes all the features of the internal addressing hardware available to the programmer. Some of the implications of this instruction are illustrated in Table 3.

The LEA instruction also allows the user to access data and tables in a position independent manner. For example:

```
        LEAX    MSG1, PCR
        LBSR    PDATA (print message routine)
        •
        •
MSG1    FCC     'MESSAGE'
```

This sample program prints: 'MESSAGE'. By writing MSG1, PCR, the assembler computes the distance between the present address and MSG1. This result is placed as a constant into the LEAX instruction which will be indexed from the PC value at the time of execution. No matter where the code is located when it is executed, the computed offset from the PC will put the absolute address of MSG1 into the X pointer register. This code is totally position independent.

The LEA instructions are very powerful and use an internal holding register (temp). Care must be exercised when using the LEA instructions with the auto increment and auto decrement addressing modes due to the sequence of internal operations. The LEA internal sequence is outlined as follows:

LEAa ,b+ (any of the 16-bit pointer registers X, Y, U, or S may be substituted for a and b)

1. b → temp (calculate the EA)
2. b + 1 → b (modify b, postincrement)
3. temp → a (load a)

LEAa , – b

1. b – 1 → temp (calculate EA with predecrement)
2. b – 1 → b (modify b, predecrement)
3. temp → a (load a)

TABLE 3 — LEA EXAMPLES

Instruction	Operation	Comment
LEAX 10, X	X + 10 → X	Adds 5-Bit Constant 10 to X
LEAX 500, X	X + 500 → X	Adds 16-Bit Constant 500 to X
LEAY A, Y	Y + A → Y	Adds 8-Bit A Accumulator to Y
LEAY D, Y	Y + D → Y	Adds 16-Bit D Accumulator to Y
LEAU – 10, U	U – 10 → U	Substracts 10 from U
LEAS – 10, S	S – 10 → S	Used to Reserve Area on Stack
LEAS 10, S	S + 10 → S	Used to 'Clean Up' Stack
LEAX 5, S	S + 5 → X	Transfers As Well As Adds

3

Auto increment-by-two and auto decrement-by-two instructions work similarly. Note that LEAX ,X+ does not change X; however, LEAX, −X does decrement; LEAX 1, X should be used to increment X by one.

MUL

Multiplies the unsigned binary numbers in the A and B accumulator and places the unsigned result into the 16-bit D accumulator. The unsigned multiply also allows multiple-precision multiplications.

LONG AND SHORT RELATIVE BRANCHES

The MC6809 has the capability of program counter relative branching throughout the entire memory map. In this mode, if the branch is to be taken, the 8- or 16-bit signed offset is added to the value of the program counter to be used as the effective address. This allows the program to branch anywhere in the 64K memory map. Position-independent code can be easily generated through the use of relative branching. Both short (8-bit) and long (16-bit) branches are available.

3

SYNC

After encountering a sync instruction, the MPU enters a sync state, stops processing instructions, and waits for an interrupt. If the pending interrupt is non-maskable ($\overline{NMI}$) or maskable ($\overline{FIRQ}$, $\overline{IRQ}$) with its mask bit (F or I) clear, the processor will clear the sync state and perform the normal interrupt stacking and service routine. Since $\overline{FIRQ}$ and $\overline{IRQ}$ are not edge-triggered, a low level with a minimum duration of three bus cycles is required to assure that the interrupt will be taken. If the pending interrupt is maskable ($\overline{FIRQ}$, $\overline{IRQ}$) with its mask bit (F or I) set, the processor will clear the sync state and continue processing by executing the next in-line instruction. Figure 18 depicts sync timing.

SOFTWARE INTERRUPTS

A software interrupt is an instruction which will cause an interrupt and its associated vector fetch. These software interrupts are useful in operating system calls, software debugging, trace operations, memory mapping, and software development systems. Three levels of SWI are available on the MC6809, and are prioritized in the following order: SWI, SWI2, SWI3.

16-BIT OPERATION

The MC6809 has the capability of processing 16-bit data. These instructions include loads, stores, compares, adds, subtracts, transfers, exchanges, pushes, and pulls.

CYCLE-BY-CYCLE OPERATION

The address bus cycle-by-cycle performance chart (Figure 18) illustrates the memory-access sequence corresponding to each possible instruction and addressing mode in the MC6809. Each instruction begins with an opcode fetch. While that opcode is being internally decoded, the next program byte is always fetched. (Most instructions will use the next byte, so this technique considerably speeds throughput.) Next, the operation of each opcode will follow the flowchart. $\overline{VMA}$ is an indication of $FFFF_{16}$ on the address bus, R/$\overline{W}$ = 1 and BS = 0. The following examples illustrate the use of the chart.

Example 1: LBSR (Branch Taken)
Before Execution SP = F000

```
                •
                •
                •
$8000           LBSR    CAT
                •
                •
                •
$A000   CAT     •
```

CYCLE-BY-CYCLE FLOW

Cycle #	Address	Data	R/$\overline{W}$	Description
1	8000	17	1	Opcode Fetch
2	8001	20	1	Offset High Byte
3	8002	00	1	Offset Low Byte
4	FFFF	*	1	$\overline{VMA}$ Cycle
5	FFFF	*	1	$\overline{VMA}$ Cycle
6	A000	*	1	Computed Branch Address
7	FFFF	*	1	$\overline{VMA}$ Cycle
8	EFFF	80	0	Stack High Order Byte of Return Address
9	EFFE	03	0	Stack Low Order Byte of Return Address

Example 2: DEC (Extended)

```
$8000   DEC     $A000
        •
        •
        •
$A8000  $80
```

CYCLE-BY-CYCLE FLOW

Cycle #	Address	Data	R/$\overline{W}$	Description
1	8000	7A	1	Opcode Fetch
2	8001	A0	1	Operand Address, High Byte
3	8002	00	1	Operand Address, Low Byte
4	FFFF	*	1	$\overline{VMA}$ Cycle
5	A000	80	1	Read the Data
6	FFFF	*	1	$\overline{VMA}$ Cycle
7	A000	7F	0	Store the Decremented Data

*The data bus has the data at that particular address.

INSTRUCTION SET TABLES

The instructions of the MC6809 have been broken down into five different categories. They are as follows:

8-bit operation (Table 4)
16-bit operation (Table 5)
Index register/stack pointer instructions (Table 6)
Relative branches (long or short) (Table 7)
Miscellaneous instructions (Table 8)

Hexadecimal values for the instructions are given in Table 9.

PROGRAMMING AID

Figure 19 contains a compilation of data that will assist in programming the MC6809.

FIGURE 17 — SYNC TIMING

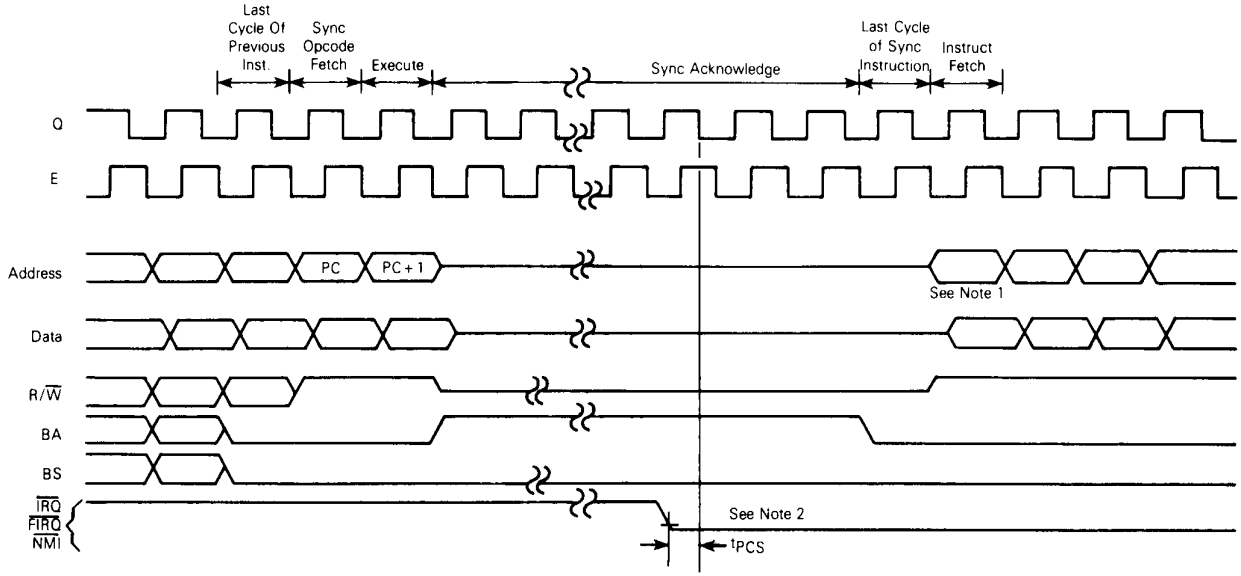

NOTES:

1. If the associated mask bit is set when the interrupt is requested, this cycle will be an instruction fetch from address location PC + 1. However, if the interrupt is accepted ($\overline{NMI}$ or an unmasked $\overline{FIRQ}$ or $\overline{IRQ}$) interrupt processing continues with this cycle as m on Figures 9 and 10 (Interrupt Timing).
2. If mask bits are clear, $\overline{IRQ}$ and $\overline{FIRQ}$ must be held low for three cycles to guarantee interrupt to be taken, although only one cycle is necessary to bring the processor out of SYNC.
3. Waveform measurements for all inputs and outputs are specified at logic high 2.0 V and logic low 0.8 V unless otherwise specified.

FIGURE 18 — CYCLE-BY-CYCLE PERFORMANCE (Sheet 1 of 5)

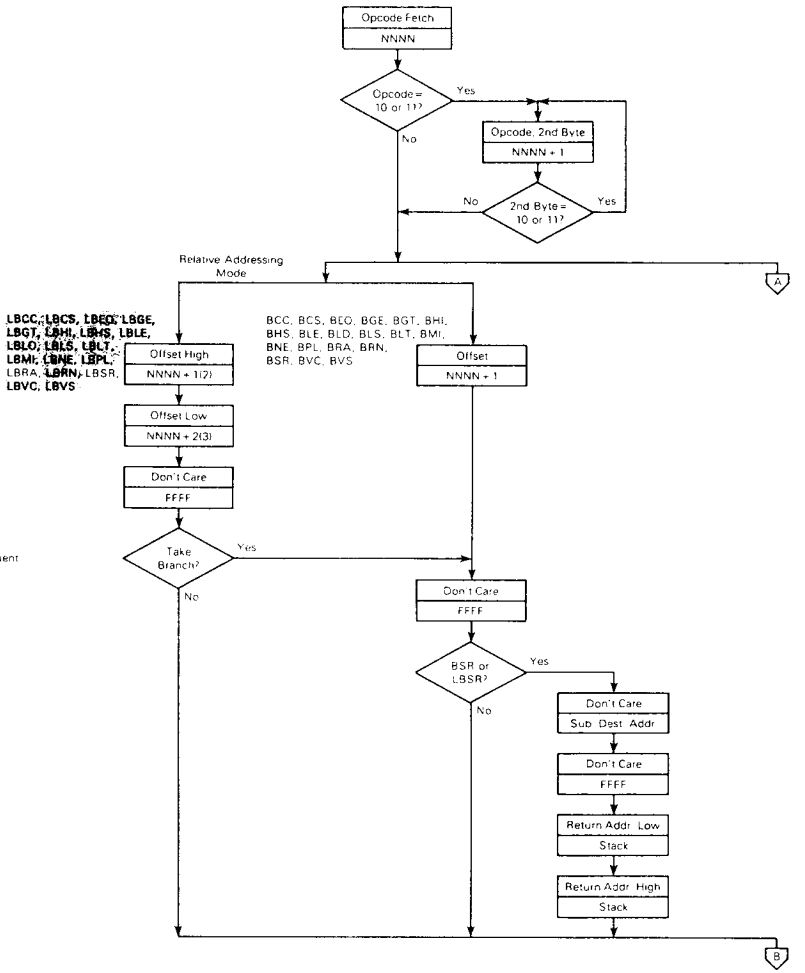

NOTES:

1. Each state shows

Data Bus	Offset High
Address Bus	NNNN + 1(2)

2. Address NNNN is location of opcode
3. If opcode is a two byte opcode subsequent addresses are in parenthesis (–)
4. Two-byte opcodes are highlighted

FIGURE 18 — CYCLE-BY-CYCLE PERFORMANCE (Sheet 2 of 5)

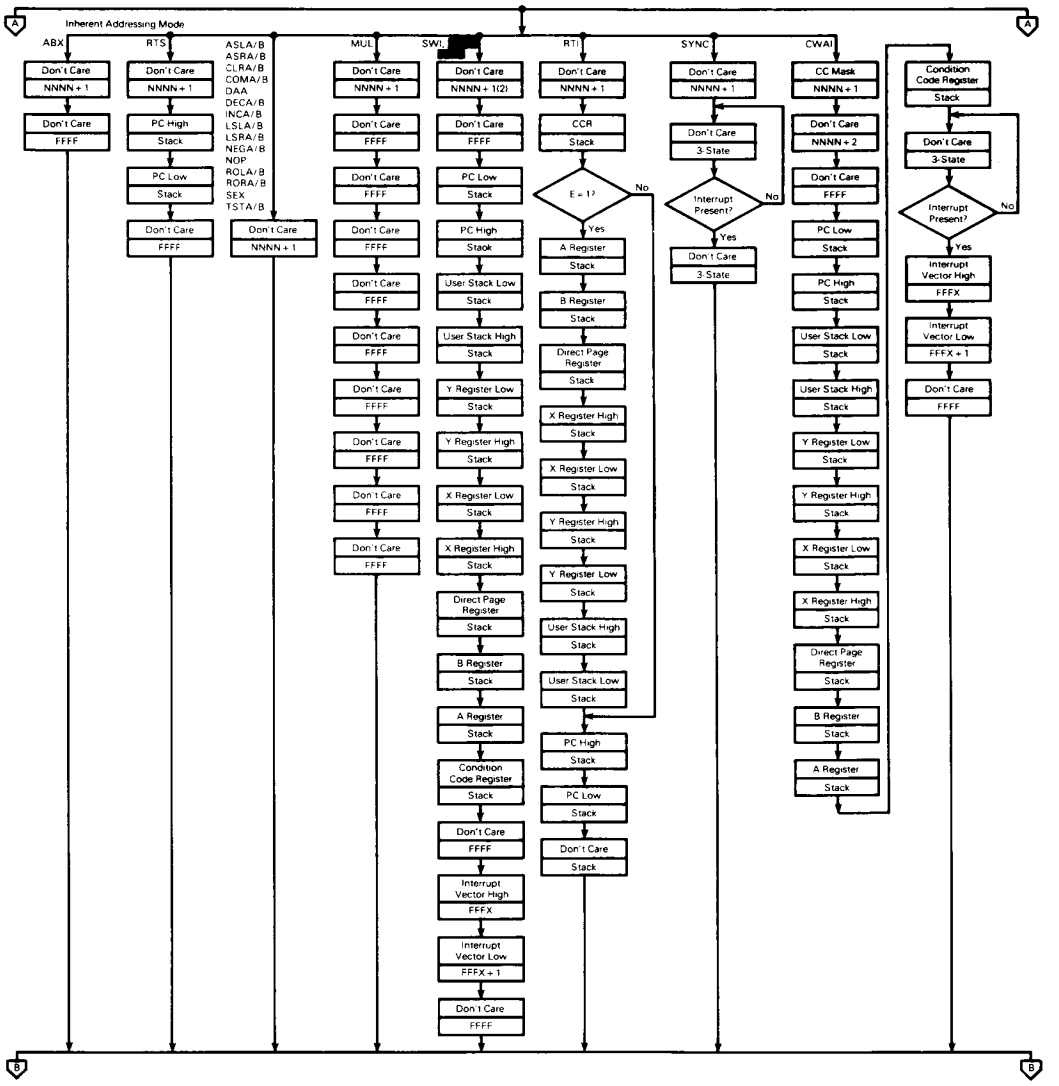

3

FIGURE 18 — CYCLE-BY-CYCLE PERFORMANCE (Sheet 3 of 5)

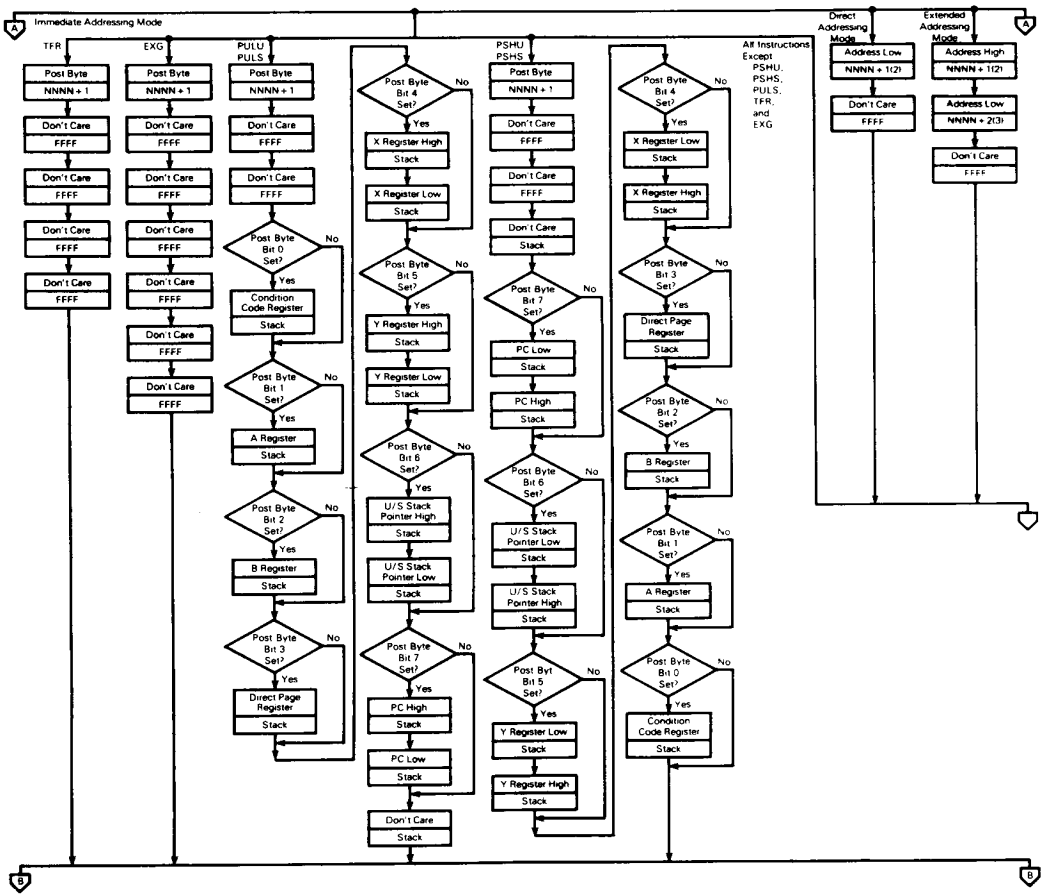

FIGURE 18 — CYCLE-BY-CYCLE PERFORMANCE (Sheet 4 of 5)

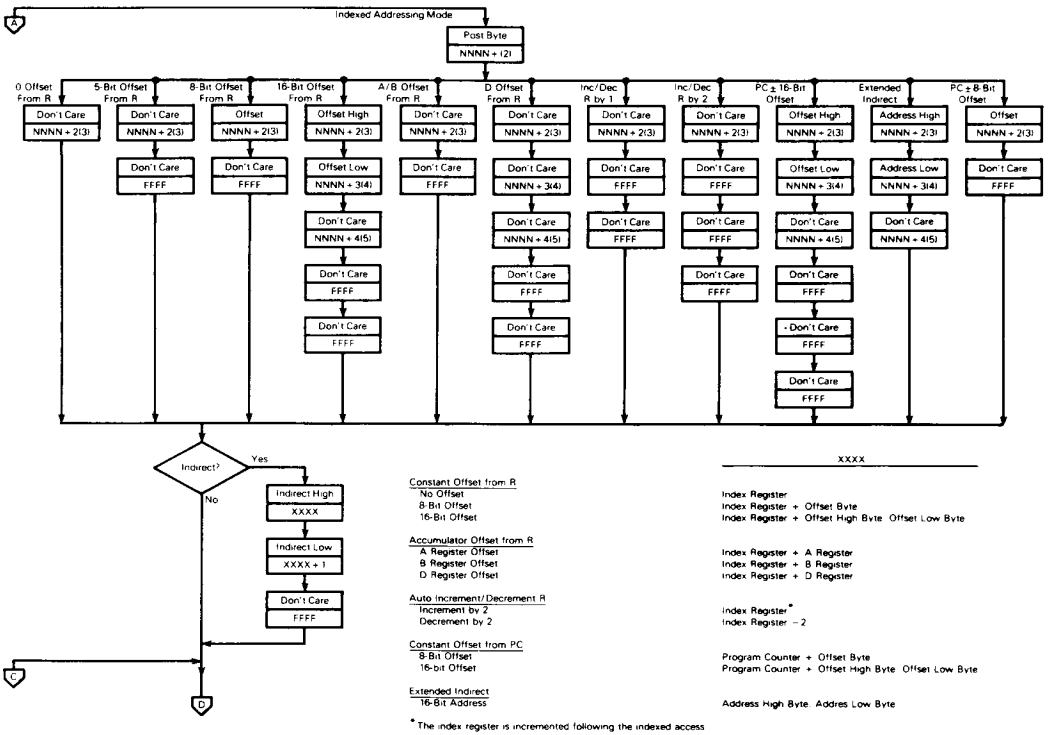

3

FIGURE 18 — CYCLE-BY-CYCLE PERFORMANCE (Sheet 5 of 5)

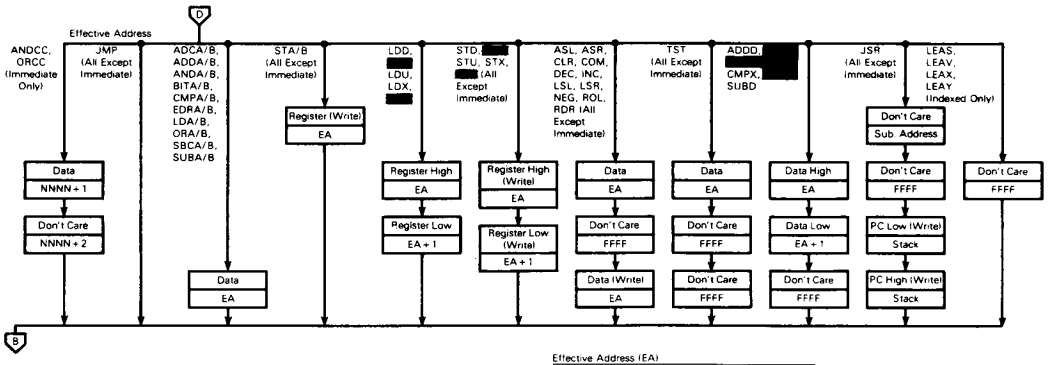

	Effective Address (EA)
Constant Offset from R	
No Offset	Index Register
5-Bit Offset	Index Register
8-Bit Offset	Index Register + Post Byte
16-Bit Offset	Index Register + Post Byte High, Post Byte Low
Accumulator Offset from R	
A Register Offset	Index Register + A Register
B Register Offset	Index Register + B Register
D Register Offset	Index Register + D Register
Auto Increment/Decrement R	
Increment by 1	Index Register*
Increment by 2	Index Register*
Decrement by 1	Index Register − 1
Decrement by 2	Index Register − 2
Constant Offset from PC	
8-Bit Offset	Program Counter + Offset Byte
16-Bit Offset	Program Counter + Offset High Byte, Offset Low Byte
Direct	Direct Page Register, Address Low
Extended	Address High, Address Low
Immediate	NNNN + 1

*The index register is incremented following the indexed access

TABLE 4 — 8-BIT ACCUMULATOR AND MEMORY INSTRUCTIONS

Mnemonic(s)	Operation
ADCA, ADCB	Add memory to accumulator with carry
ADDA, ADDB	Add memory to accumulator
ANDA, ANDB	And memory with accumulator
ASL, ASLA, ASLB	Arithmetic shift of accumulator or memory left
ASR, ASRA, ASRB	Arithmetic shift of accumulator or memory right
BITA, BITB	Bit test memory with accumulator
CLR, CLRA, CLRB	Clear accumulator or memory location
CMPA, CMPB	Compare memory from accumulator
COM, COMA, COMB	Complement accumulator or memory location
DAA	Decimal adjust A accumulator
DEC, DECA, DECB	Decrement accumulator or memory location
EORA, EORB	Exclusive or memory with accumulator
EXG R1, R2	Exchange R1 with R2 (R1, R2 = A, B, CC, DP)
INC, INCA, INCB	Increment accumulator or memory location
LDA, LDB	Load accumulator from memory
LSL, LSLA, LSLB	Logical shift left accumulator or memory location
LSR, LSRA, LSRB	Logical shift right accumulator or memory location
MUL	Unsigned multiply (A × B → D)
NEG, NEGA, NEGB	Negate accumulator or memory
ORA, ORB	Or memory with accumulator
ROL, ROLA, ROLB	Rotate accumulator or memory left
ROR, RORA, RORB	Rotate accumulator or memory right
SBCA, SBCB	Subtract memory from accumulator with borrow
STA, STB	Store accumulator to memory
SUBA, SUBB	Subtract memory from accumulator
TST, TSTA, TSTB	Test accumulator or memory location
TFR R1, R2	Transfer R1 to R2 (R1, R2 = A, B, CC, DP)

NOTE: A, B, CC, or DP may be pushed to (pulled from) stack with either PSHS, PSHU (PULS, PULU) instructions.

TABLE 5 — 16-BIT ACCUMULATOR AND MEMORY INSTRUCTIONS

Mnemonic(s)	Operation
ADDD	Add memory to D accumulator
CMPD	Compare memory from D accumulator
EXG D, R	Exchange D with X, Y, S, U, or PC
LDD	Load D accumulator from memory
SEX	Sign Extend B accumulator into A accumulator
STD	Store D accumulator to memory
SUBD	Subtract memory from D accumulator
TFR D, R	Transfer D to X, Y, S, U, or PC
TFR R, D	Transfer X, Y, S, U, or PC to D

NOTE: D may be pushed (pulled) to stack with either PSHS, PSHU (PULS, PULU) instructions.

TABLE 6 — INDEX REGISTER/STACK POINTER INSTRUCTIONS

Instruction	Description
CMPS, CMPU	Compare memory from stack pointer
CMPX, CMPY	Compare memory from index register
EXG R1, R2	Exchange D, X, Y, X, U, or PC with D, X Y, S, U, or PC
LEAS, LEAU	Load effective address into stack pointer
LEAX, LEAY	Load effective address into index register
LDS, LDU	Load stack pointer from memory
LDX, LDY	Load index register from memory
PSHS	Push A, B, CC, DP, D, X, Y, U, or PC onto hardware stack
PSHU	Push A, B, CC, DP, D, X, Y, S, or PC onto user stack
PULS	Pull A, B, CC, DP, D, X, Y, U, or PC from hardware stack
PULU	Pull A, B, CC, DP, D, X, Y, S, or PC from hardware stack
STS, STU	Store stack pointer to memory
STX, STY	Store index register to memory
TFR R1, R2	Transfer D, X, Y, S, U or PC to D, X, Y, S, U, or PC
ABX	Add B accumulator to X (unsigned)

TABLE 7 — BRANCH INSTRUCTIONS

Instruction	Description
SIMPLE BRANCHES	
BEQ, LBEQ	Branch if equal
BNE, LBNE	Branch if not equal
BMI, LBMI	Branch if minus
BPL, LBPL	Branch if plus
BCS, LBCS	Branch if carry set
BCC, LBCC	Branch if carry clear
BVS, LBVS	Branch if overflow set
BVC, LBVC	Branch if overflow clear
SIGNED BRANCHES	
BGT, LBGT	Branch if greater (signed)
BVS, LBVS	Branch if invalid 2s complement result
BGE, LBGE	Branch if greater than or equal (signed)
BEQ, LBEQ	Branch if equal
BNE, LBNE	Branch if not equal
BLE, LBLE	Branch if less than or equal (signed)
BVC, LBVC	Branch if valid 2s complement result
BLT, LBLT	Branch if less than (signed)
UNSIGNED BRANCHES	
BHI, LBHI	Branch if higher (unsigned)
BCC, LBCC	Branch if higher or same (unsigned)
BHS, LBHS	Branch if higher or same (unsigned)
BEQ, LBEQ	Branch if equal
BNE, LBNE	Branch if not equal
BLS, LBLS	Branch if lower or same (unsigned)
BCS, LBCS	Branch if lower (unsigned)
BLO, LBLO	Branch if lower (unsigned)
OTHER BRANCHES	
BSR, LBSR	Branch to subroutine
BRA, LBRA	Branch always
BRN, LBRN	Branch never

TABLE 8 — MISCELLANEOUS INSTRUCTIONS

Instruction	Description
ANDCC	AND condition code register
CWAI	AND condition code register, then wait for interrupt
NOP	No operation
ORCC	OR condition code register
JMP	Jump
JSR	Jump to subroutine
RTI	Return from interrupt
RTS	Return from subroutine
SWI, SWI2, SWI3	Software interrupt (absolute indirect)
SYNC	Synchronize with interrupt line

TABLE 9 — HEXADECIMAL VALUES OF MACHINE CODES

OP	Mnem	Mode	~	#	OP	Mnem	Mode	~	#	OP	Mnem	Mode	~	#
00	NEG	Direct	6	2	30	LEAX	Indexed	4+	2+	60	NEG	Indexed	6+	2+
01	*				31	LEAY		4+	2+	61	*			
02	*				32	LEAS		4+	2+	62	*			
03	COM		6	2	33	LEAU	Indexed	4+	2+	63	COM		6+	2+
04	LSR		6	2	34	PSHS	Immed	5+	2	64	LSR		6+	2+
05	*				35	PULS	Immed	5+	2	65	*			
06	ROR		6	2	36	PSHU	Immed	5+	2	66	ROR		6+	2+
07	ASR		6	2	37	PULU	Immed	5+	2	67	ASR		6+	2+
08	ASL, LSL		6	2	38	*	–			68	ASL, LSL		6+	2+
09	ROL		6	2	39	RTS	Inherent	5	1	69	ROL		6+	2+
0A	DEC		6	2	3A	ABX		3	1	6A	DEC		6+	2+
0B	*				3B	RTI		6/15	1	6B	*			
0C	INC		6	2	3C	CWAI		≥20	2	6C	INC		6+	2+
0D	TST		6	2	3D	MUL	Inherent	11	1	6D	TST		6+	2+
0E	JMP		3	2	3E	*	–			6E	JMP		3+	2+
0F	CLR	Direct	6	2	3F	SWI	Inherent	19	1	6F	CLR	Indexed	6+	2+
10	Page 2	–	–	–	40	NEGA	Inherent	2	1	70	NEG	Extended	7	3
11	Page 3	–	–	–	41	*				71	*			
12	NOP	Inherent	2	1	42	*				72	*			
13	SYNC	Inherent	≥4	1	43	COMA		2	1	73	COM		7	3
14	*				44	LSRA		2	1	74	LSR		7	3
15	*				45	*				75	*			
16	LBRA	Relative	5	3	46	RORA		2	1	76	ROR		7	3
17	LBSR	Relative	9	3	47	ASRA		2	1	77	ASR		7	3
18	*				48	ASLA, LSLA		2	1	78	ASL, LSL		7	3
19	DAA	Inherent	2	1	49	ROLA		2	1	79	ROL		7	3
1A	ORCC	Immed	3	2	4A	DECA		2	1	7A	DEC		7	3
1B	*	–			4B	*				7B	*			
1C	ANDCC	Immed	3	2	4C	INCA		2	1	7C	INC		7	3
1D	SEX	Inherent	2	1	4D	TSTA		2	1	7D	TST		7	3
1E	EXG	Immed	8	2	4E	*				7E	JMP		4	3
1F	TFR	Immed	6	2	4F	CLRA	Inherent	2	1	7F	CLR	Extended	7	3
20	BRA	Relative	3	2	50	NEGB	Inherent	2	1	80	SUBA	Immed	2	2
21	BRN		3	2	51	*				81	CMPA		2	2
22	BHI		3	2	52	*				82	SBCA		2	2
23	BLS		3	2	53	COMB		2	1	83	SUBD		4	3
24	BHS, BCC		3	2	54	LSRB		2	1	84	ANDA		2	2
25	BLO, BCS		3	2	55	*				85	BITA		2	2
26	BNE		3	2	56	RORB		2	1	86	LDA		2	2
27	BEQ		3	2	57	ASRB		2	1	87	*			
28	BVC		3	2	58	ASLB, LSLB		2	1	88	EORA		2	2
29	BVS		3	2	59	ROLB		2	1	89	ADCA		2	2
2A	BPL		3	2	5A	DECB		2	1	8A	ORA		2	2
2B	BMI		3	2	5B	*				8B	ADDA		2	2
2C	BGE		3	2	5C	INCB		2	1	8C	CMPX	Immed	4	3
2D	BLT		3	2	5D	TSTB		2	1	8D	BSR	Relative	7	2
2E	BGT		3	2	5E	*				8E	LDX	Immed	3	3
2F	BLE	Relative	3	2	5F	CLRB	Inherent	2	1	8F	*			

LEGEND:

~ Number of MPU cycles (less possible push pull or indexed-mode cycles)
# Number of program bytes
* Denotes unused opcode

3

TABLE 9 — HEXADECIMAL VALUES OF MACHINE CODES (CONTINUED)

OP	Mnem	Mode	~	#
90	SUBA	Direct	4	2
91	CMPA		4	2
92	SBCA		4	2
93	SUBD		6	2
94	ANDA		4	2
95	BITA		4	2
96	LDA		4	2
97	STA		4	2
98	EORA		4	2
99	ADCA		4	2
9A	ORA		4	2
9B	ADDA		4	2
9C	CMPX		6	2
9D	JSR		7	2
9E	LDX		5	2
9F	STX	Direct	5	2
A0	SUBA	Indexed	4+	2+
A1	CMPA		4+	2+
A2	SBCA		4+	2+
A3	SUBD		6+	2+
A4	ANDA		4+	2+
A5	BITA		4+	2+
A6	LDA		4+	2+
A7	STA		4+	2+
A8	EORA		4+	2+
A9	ADCA		4+	2+
AA	ORA		4+	2+
AB	ADDA		4+	2+
AC	CMPX		6+	2+
AD	JSR		7+	2+
AE	LDX		5+	2+
AF	STX	Indexed	5+	2+
B0	SUBA	Extended	5	3
B1	CMPA		5	3
B2	SBCA		5	3
B3	SUBD		7	3
B4	ANDA		5	3
B5	BITA		5	3
B6	LDA		5	3
B7	STA		5	3
B8	EORA		5	3
B9	ADCA		5	3
BA	ORA		5	3
BB	ADDA		5	3
BC	CMPX		7	3
BD	JSR		8	3
BE	LDX		6	3
BF	STX	Extended	6	3

NOTE: All unused opcodes are both undefined and illegal

OP	Mnem	Mode	~	#
C0	SUBB	Immed	2	2
C1	CMPB		2	2
C2	SBCB		2	2
C3	ADDD		4	3
C4	ANDB		2	2
C5	BITB	Immed	2	2
C6	LDB	Immed	2	2
C7	*			
C8	EORB		2	2
C9	ADCB		2	2
CA	ORB		2	2
CB	ADDB		2	2
CC	LDD		3	3
CD	*			
CE	LDU	Immed	3	3
CF	*			
D0	SUBB	Direct	4	2
D1	CMPB		4	2
D2	SBCB		4	2
D3	ADDD		6	2
D4	ANDB		4	2
D5	BITB		4	2
D6	LDB		4	2
D7	STB		4	2
D8	EORB		4	2
D9	ADCB		4	2
DA	ORB		4	2
DB	ADDB		4	2
DC	LDD		5	2
DD	STD		5	2
DE	LDU		5	2
DF	STU	Direct	5	2
E0	SUBB	Indexed	4+	2+
E1	CMPB		4+	2+
E2	SBCB		4+	2+
E3	ADDD		6+	2+
E4	ANDB		4+	2+
E5	BITB		4+	2+
E6	LDB		4+	2+
E7	STB		4+	2+
E8	EORB		4+	2+
E9	ADCB		4+	2+
EA	ORB		4+	2+
EB	ADDB		4+	2+
EC	LDD		5+	2+
ED	STD		5+	2+
EE	LDU		5+	2+
EF	STU	Indexed	5+	2+
F0	SUBB	Extended	5	3
F1	CMPB		5	3
F2	SBCB		5	3
F3	ADDD		7	3
F4	ANDB		5	3
F5	BITB		5	3
F6	LDB		5	3
F7	STB		5	3
F8	EORB		5	3
F9	ADCB		5	3
FA	ORB		5	3
FB	ADDB	Extended	5	3
FC	LDD	Extended	6	3
FD	STD		6	3
FE	LDU		6	3
FF	STU	Extended	6	3

OP	Mnem	Mode	~	#
Page 2 and 3 Machine Codes				
1021	LBRN	Relative	5	4
1022	LBHI		5(6)	4
1023	LBLS		5(6)	4
1024	LBHS, LBCC		5(6)	4
1025	LBCS, LBLO		5(6)	4
1026	LBNE		5(6)	4
1027	LBEQ		5(6)	4
1028	LBVC		5(6)	4
1029	LBVS		5(6)	4
102A	LBPL		5(6)	4
102B	LBMI		5(6)	4
102C	LBGE		5(6)	4
102D	LBLT		5(6)	4
102E	LBGT		5(6)	4
102F	LBLE	Relative	5(6)	4
103F	SWI2	Inherent	20	2
1083	CMPD	Immed	5	4
108C	CMPY		5	4
108E	LDY	Immed	4	4
1093	CMPD	Direct	7	3
109C	CMPY		7	3
109E	LDY		6	3
109F	STY	Direct	6	3
10A3	CMPD	Indexed	7+	3+
10AC	CMPY		7+	3+
10AE	LDY		6+	3+
10AF	STY	Indexed	6+	3+
10B3	CMPD	Extended	8	4
10BC	CMPY		8	4
10BE	LDY		7	4
10BF	STY	Extended	7	4
10CE	LDS	Immed	4	4
10DE	LDS	Direct	6	3
10DF	STS	Direct	6	3
10EE	LDS	Indexed	6+	3+
10EF	STS	Indexed	6+	3+
10FE	LDS	Extended	7	4
10FF	STS	Extended	7	4
113F	SWI3	Inherent	20	2
1183	CMPU	Immed	5	4
118C	CMPS	Immed	5	4
1193	CMPU	Direct	7	3
119C	CMPS	Direct	7	3
11A3	CMPU	Indexed	7+	3+
11AC	CMPS	Indexed	7+	3+
11B3	CMPU	Extended	8	4
11BC	CMPS	Extended	8	4

3

FIGURE 19 — PROGRAMMING AID

Instruction	Forms	Immediate Op	Immediate ~	Immediate #	Direct Op	Direct ~	Direct #	Indexed Op	Indexed ~	Indexed #	Extended Op	Extended ~	Extended #	Inherent Op	Inherent ~	Inherent #	Description	5 H	3 N	2 Z	1 V	0 C
ABX														3A	3	1	B + X → X (Unsigned)	•	•	•	•	•
ADC	ADCA	89	2	2	99	4	2	A9	4+	2+	B9	5	3				A + M + C → A	↕	↕	↕	↕	↕
	ADCB	C9	2	2	D9	4	2	E9	4+	2+	F9	5	3				B + M + C → B	↕	↕	↕	↕	↕
ADD	ADDA	8B	2	2	9B	4	2	AB	4+	2+	BB	5	3				A + M → A	↕	↕	↕	↕	↕
	ADDB	CB	2	2	DB	4	2	EB	4+	2+	FB	5	3				B + M → B	↕	↕	↕	↕	↕
	ADDD	C3	4	3	D3	6	2	E3	6+	2+	F3	7	3				D + M:M + 1 → D	•	↕	↕	↕	↕
AND	ANDA	84	2	2	94	4	2	A4	4+	2+	B4	5	3				A ∧ M → A	•	↕	↕	0	•
	ANDB	C4	2	2	D4	4	2	E4	4+	2+	F4	5	3				B ∧ M → B	•	↕	↕	0	•
	ANDCC	1C	3	2													CC ∧ IMM → CC					7
ASL	ASLA													48	2	1	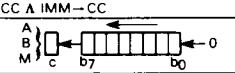	8	↕	↕	↕	↕
	ASLB													58	2	1		8	↕	↕	↕	↕
	ASL				08	6	2	68	6+	2+	78	7	3					8	↕	↕	↕	↕
ASR	ASRA													47	2	1	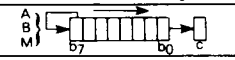	8	↕	↕	•	↕
	ASRB													57	2	1		8	↕	↕	•	↕
	ASR				07	6	2	67	6+	2+	77	7	3					8	↕	↕	•	↕
BIT	BITA	85	2	2	95	4	2	A5	4+	2+	B5	5	3				Bit Test A (M ∧ A)	•	↕	↕	0	•
	BITB	C5	2	2	D5	4	2	E5	4+	2+	F5	5	3				Bit Test B (M ∧ B)	•	↕	↕	0	•
CLR	CLRA													4F	2	1	0 → A	•	0	1	0	0
	CLRB													5F	2	1	0 → B	•	0	1	0	0
	CLR				0F	6	2	6F	6+	2+	7F	7	3				0 → M	•	0	1	0	0
CMP	CMPA	81	2	2	91	4	2	A1	4+	2+	B1	5	3				Compare M from A	8	↕	↕	↕	↕
	CMPB	C1	2	2	D1	4	2	E1	4+	2+	F1	5	3				Compare M from B	8	↕	↕	↕	↕
	CMPD	10	5	4	10	7	3	10	7+	3+	10	8	4				Compare M:M + 1 from D	•	↕	↕	↕	↕
		83			93			A3			B3											
	CMPS	11	5	4	11	7	3	11	7+	3+	11	8	4				Compare M:M + 1 from S	•	↕	↕	↕	↕
		8C			9C			AC			BC											
	CMPU	11	5	4	11	7	3	11	7+	3+	11	8	4				Compare M:M + 1 from U	•	↕	↕	↕	↕
		83			93			A3			B3											
	CMPX	8C	4	3	9C	6	2	AC	6+	2+	BC	7	3				Compare M:M + 1 from X	•	↕	↕	↕	↕
	CMPY	10	5	4	10	7	3	10	7+	3+	10	8	4				Compare M:M + 1 from Y	•	↕	↕	↕	↕
		8C			9C			AC			BC											
COM	COMA													43	2	1	$\overline{A} \rightarrow A$	•	↕	↕	0	1
	COMB													53	2	1	$\overline{B} \rightarrow B$	•	↕	↕	0	1
	COM				03	6	2	63	6+	2+	73	7	3				$\overline{M} \rightarrow M$	•	↕	↕	0	1
CWAI		3C	≥20	2													CC ∧ IMM → CC Wait for Interrupt					7
DAA														19	2	1	Decimal Adjust A	•	↕	↕	0	↕
DEC	DECA													4A	2	1	A − 1 → A	•	↕	↕	↕	•
	DECB													5A	2	1	B − 1 → B	•	↕	↕	↕	•
	DEC				0A	6	2	6A	6+	2+	7A	7	3				M − 1 → M	•	↕	↕	↕	•
EOR	EORA	88	2	2	98	4	2	A8	4+	2+	B8	5	3				A ⊻ M → A	•	↕	↕	0	•
	EORB	C8	2	2	D8	4	2	E8	4+	2+	F8	5	3				B ⊻ M → B	•	↕	↕	0	•
EXG	R1, R2	1E	8	2													R1 ↔ R2[2]	•	•	•	•	•
INC	INCA													4C	2	1	A + 1 → A	•	↕	↕	↕	•
	INCB													5C	2	1	B + 1 → B	•	↕	↕	↕	•
	INC				0C	6	2	6C	6+	2+	7C	7	3				M + 1 → M	•	↕	↕	↕	•
JMP					0E	3	2	6E	3+	2+	7E	4	3				EA[3] → PC	•	•	•	•	•
JSR					9D	7	2	AD	7+	2+	BD	8	3				Jump to Subroutine	•	•	•	•	•
LD	LDA	86	2	2	96	4	2	A6	4+	2+	B6	5	3				M → A	•	↕	↕	0	•
	LDB	C6	2	2	D6	4	2	E6	4+	2+	F6	5	3				M → B	•	↕	↕	0	•
	LDD	CC	3	3	DC	5	2	EC	5+	2+	FC	6	3				M:M + 1 → D	•	↕	↕	0	•
	LDS	10	4	4	10	6	3	10	6+	3+	10	7	4				M:M + 1 → S	•	↕	↕	0	•
		CE			DE			EE			FE											
	LDU	CE	3	3	DE	5	2	EE	5+	2+	FE	6	3				M:M + 1 → U	•	↕	↕	0	•
	LDX	8E	3	3	9E	5	2	AE	5+	2+	BE	6	3				M:M + 1 → X	•	↕	↕	0	•
	LDY	10	4	4	10	6	3	10	6+	3+	10	7	4				M:M + 1 → Y	•	↕	↕	0	•
		8E			9E			AE			BE											
LEA	LEAS							32	4+	2+							EA[3] → S	•	•	•	•	•
	LEAU							33	4+	2+							EA[3] → U	•	•	•	•	•
	LEAX							30	4+	2+							EA[3] → X	•	•	↕	•	•
	LEAY							31	4+	2+							EA[3] → Y	•	•	↕	•	•

LEGEND:

OP Operation Code (Hexadecimal)
~ Number of MPU Cycles
# Number of Program Bytes
+ Arithmetic Plus
− Arithmetic Minus
• Multiply
$\overline{M}$ Complement of M
→ Transfer Into
H Half-carry (from bit 3)
N Negative (sign bit)
Z Zero result
V Overflow, 2's complement
C Carry from ALU
↕ Test and set if true, cleared otherwise
• Not Affected
CC Condition Code Register
: Concatenation
V Logical or
∧ Logical and
⊻ Logical Exclusive or

FIGURE 19 — PROGRAMMING AID (CONTINUED)

Instruction	Forms	Addressing Modes: Immediate Op	Immediate ~	Immediate #	Direct Op	Direct ~	Direct #	Indexed[1] Op	Indexed[1] ~	Indexed[1] #	Extended Op	Extended ~	Extended #	Inherent Op	Inherent ~	Inherent #	Description	5 H	3 N	2 Z	1 V	0 C
LSL	LSLA													48	2	1	A {B M} ← 0; c b7 b0	•	↕	↕	↕	↕
	LSLB													58	2	1		•	↕	↕	↕	↕
	LSL				08	6	2	68	6+	2+	78	7	3					•	↕	↕	↕	↕
LSR	LSRA													44	2	1	A {B M} 0 → c; b7 b0	•	0	↕	•	↕
	LSRB													54	2	1		•	0	↕	•	↕
	LSR				04	6	2	64	6+	2+	74	7	3					•	0	↕	•	↕
MUL														3D	11	1	A × B → D (Unsigned)	•	•	↕	•	9
NEG	NEGA													40	2	1	$\overline{A}$ + 1 → A	8	↕	↕	↕	↕
	NEGB													50	2	1	$\overline{B}$ + 1 → B	8	↕	↕	↕	↕
	NEG				00	6	2	60	6+	2+	70	7	3				$\overline{M}$ + 1 → M	8	↕	↕	↕	↕
NOP														12	2	1	No Operation	•	•	•	•	•
OR	ORA	8A	2	2	9A	4	2	AA	4+	2+	BA	5	3				A ∨ M → A	•	↕	↕	0	•
	ORB	CA	2	2	DA	4	2	EA	4+	2+	FA	5	3				B ∨ M → B	•	↕	↕	0	•
	ORCC	1A	3	2													CC ∨ IMM → CC				↕	
PSH	PSHS	34	5+[4]	2													Push Registers on S Stack	•	•	•	•	•
	PSHU	36	5+[4]	2													Push Registers on U Stack	•	•	•	•	•
PUL	PULS	35	5+[4]	2													Pull Registers from S Stack	•	•	•	•	•
	PULU	37	5+[4]	2													Pull Registers from U Stack	•	•	•	•	•
ROL	ROLA													49	2	1	A {B M} c ← b7 b0	•	↕	↕	↕	↕
	ROLB													59	2	1		•	↕	↕	↕	↕
	ROL				09	6	2	69	6+	2+	79	7	3					•	↕	↕	↕	↕
ROR	RORA													46	2	1	A {B M} c → b7 b0	•	↕	↕	•	↕
	RORB													56	2	1		•	↕	↕	•	↕
	ROR				06	6	2	66	6+	2+	76	7	3					•	↕	↕	•	↕
RTI														3B	6/15	1	Return From Interrupt					
RTS														39	5	1	Return from Subroutine	•	•	•	•	•
SBC	SBCA	82	2	2	92	4	2	A2	4+	2+	B2	5	3				A − M − C → A	8	↕	↕	↕	↕
	SBCB	C2	2	2	D2	4	2	E2	4+	2+	F2	5	3				B − M − C → B	8	↕	↕	↕	↕
SEX														1D	2	1	Sign Extend B into A	•	↕	↕	0	•
ST	STA				97	4	2	A7	4+	2+	B7	5	3				A → M	•	↕	↕	0	•
	STB				D7	4	2	E7	4+	2+	F7	5	3				B → M	•	↕	↕	0	•
	STD				DD	5	2	ED	5+	2+	FD	6	3				D → M:M + 1	•	↕	↕	0	•
	STS				10	6	3	10	6+	3+	10	7	4				S → M:M + 1	•	↕	↕	0	•
					DF			EF			FF											
	STU				DF	5	2	EF	5+	2+	FF	6	3				U → M:M + 1	•	↕	↕	0	•
	STX				9F	5	2	AF	5+	2+	BF	6	3				X → M:M + 1	•	↕	↕	0	•
	STY				10	6	3	10			10	7	4				Y → M:M + 1	•	↕	↕	0	•
					9F			AF	6+	3+	BF											
SUB	SUBA	80	2	2	90	4	2	A0	4+	2+	B0	5	3				A − M → A	8	↕	↕	↕	↕
	SUBB	C0	2	2	D0	4	2	E0	4+	2+	F0	5	3				B − M → B	8	↕	↕	↕	↕
	SUBD	83	4	3	93	6	2	A3	6+	2+	B3	7	3				D − M:M + 1 → D	•	↕	↕	↕	↕
SWI	SWI[6]													3F	19	1	Software Interrupt 1	•	•	•	•	•
	SWI2[6]													10 3F	20	2	Software Interrupt 2	•	•	•	•	•
	SWI3[6]													11 3F	20	1	Software Interrupt 3	•	•	•	•	•
SYNC														13	≥4	1	Synchronize to Interrupt	•	•	•	•	•
TFR	R1, R2	1F	6	2													R1 → R2[2]	•	•	•	•	•
TST	TSTA													4D	2	1	Test A	•	↕	↕	0	•
	TSTB													5D	2	1	Test B	•	↕	↕	0	•
	TST				0D	6	2	6D	6+	2+	7D	7	3				Test M	•	↕	↕	0	•

NOTES:

1. This column gives a base cycle and byte count. To obtain total count, add the values obtained from the INDEXED ADDRESSING MODE table, Table 2.
2. R1 and R2 may be any pair of 8 bit or any pair of 16 bit registers.
   The 8 bit registers are: A, B, CC, DP
   The 16 bit registers are: X, Y, U, S, D, PC
3. EA is the effective address.
4. The PSH and PUL instructions require 5 cycles plus 1 cycle for each **byte** pushed or pulled.
5. 5(6) means: 5 cycles if branch not taken, 6 cycles if taken (Branch instructions).
6. SWI sets I and F bits. SWI2 and SWI3 do not affect I and F.
7. Conditions Codes set as a direct result of the instruction.
8. Vaue of half-carry flag is undefined.
9. Special Case — Carry set if b7 is SET.

FIGURE 19 — PROGRAMMING AID (CONTINUED)

Branch Instructions

Instruction	Forms	Addressing Mode Relative OP	~	#	Description	5 H	3 N	2 Z	1 V	0 C
BCC	BCC	24	3	2	Branch C = 0	•	•	•	•	•
	LBCC	10	5(6)	4	Long Branch	•	•	•	•	•
		24			C = 0					
BCS	BCS	25	3	2	Branch C = 1	•	•	•	•	•
	LBCS	10	5(6)	4	Long Branch	•	•	•	•	•
		25			C = 1					
BEQ	BEQ	27	3	2	Branch Z = 1	•	•	•	•	•
	LBEQ	10	5(6)	4	Long Branch	•	•	•	•	•
		27			Z = 0					
BGE	BGE	2C	3	2	Branch ≥ Zero	•	•	•	•	•
	LBGE	10	5(6)	4	Long Branch ≥ Zero	•	•	•	•	•
		2C								
BGT	BGT	2E	3	2	Branch > Zero	•	•	•	•	•
	LBGT	10	5(6)	4	Long Branch > Zero	•	•	•	•	•
		2E								
BHI	BHI	22	3	2	Branch Higher	•	•	•	•	•
	LBHI	10	5(6)	4	Long Branch Higher	•	•	•	•	•
		22								
BHS	BHS	24	3	2	Branch Higher or Same	•	•	•	•	•
	LBHS	10	5(6)	4	Long Branch Higher or Same	•	•	•	•	•
		24								
BLE	BLE	2F	3	2	Branch ≤ Zero	•	•	•	•	•
	LBLE	10	5(6)	4	Long Branch ≤ Zero	•	•	•	•	•
		2F								
BLO	BLO	25	3	2	Branch lower	•	•	•	•	•
	LBLO	10	5(6)	4	Long Branch Lower	•	•	•	•	•
		25								

Instruction	Forms	Addressing Mode Relative OP	~	#	Description	5 H	3 N	2 Z	1 V	0 C
BLS	BLS	23	3	2	Branch Lower or Same	•	•	•	•	•
	LBLS	10	5(6)	4	Long Branch Lower or Same	•	•	•	•	•
		23								
BLT	BLT	2D	3	2	Branch < Zero	•	•	•	•	•
	LBLT	10	5(6)	4	Long Branch < Zero	•	•	•	•	•
		2D								
BMI	BMI	2B	3	2	Branch Minus	•	•	•	•	•
	LBMI	10	5(6)	4	Long Branch Minus	•	•	•	•	•
		2B								
BNE	BNE	26	3	2	Branch Z = 0	•	•	•	•	•
	LBNE	10	5(6)	4	Long Branch Z ≠ 0	•	•	•	•	•
		26								
BPL	BPL	2A	3	2	Branch Plus	•	•	•	•	•
	LBPL	10	5(6)	4	Long Branch Plus	•	•	•	•	•
		2A								
BRA	BRA	20	3	2	Branch Always	•	•	•	•	•
	LBRA	16	5	3	Long Branch Always	•	•	•	•	•
BRN	BRN	21	3	2	Branch Never	•	•	•	•	•
	LBRN	10	5	4	Long Branch Never	•	•	•	•	•
		21								
BSR	BSR	8D	7	2	Branch to Subroutine	•	•	•	•	•
	LBSR	17	9	3	Long Branch to Subroutine	•	•	•	•	•
BVC	BVC	29	3	2	Branch V = 0	•	•	•	•	•
	LBVC	10	5(6)	4	Long Branch V = 0	•	•	•	•	•
		28								
BVS	BVS	29	3	2	Branch V = 1	•	•	•	•	•
	LBVS	10	5(6)	4	Long Branch V = 1	•	•	•	•	•
		29								

SIMPLE BRANCHES

	OP	~	#
BRA	20	3	2
LBRA	16	5	3
BRN	21	3	2
LBRN	1021	5	4
BSR	8D	7	2
LBSR	17	9	3

SIMPLE CONDITIONAL BRANCHES (Notes 1-4)

Test	True	OP	False	OP
N = 1	BMI	2B	BPL	2A
Z = 1	BEQ	27	BNE	26
V = 1	BVS	29	BVC	28
C = 1	BCS	25	BCC	24

SIGNED CONDITIONAL BRANCHES (Notes 1-4)

Test	True	OP	False	OP
r > m	BGT	2E	BLE	2F
r ≥ m	BGE	2C	BLT	2D
r = m	BEQ	27	BNE	26
r ≤ m	BLE	2F	BGT	2E
r < m	BLT	2D	BGE	2C

UNSIGNED CONDITIONAL BRANCHES (Notes 1-4)

Test	True	OP	False	OP
r > m	BHI	22	BLS	23
r ≥ m	BHS	24	BLO	25
r = m	BEQ	27	BNE	26
r ≤ m	BLS	23	BHI	22
r < m	BLO	25	BHS	24

NOTES:
1. All conditional branches have both short and long variations.
2. All short branches are two bytes and require three cycles.
3. All conditional long branches are formed by prefixing the short branch opcode with $10 and using a 16-bit destination offset.
4. All conditional long branches require four bytes and six cycles if the branch is taken or five cycles if the branch is not taken.

ORDERING INFORMATION

Package Type	Frequency	Temperature Range	Order Number
Plastic P Suffix	1.0 MHz	0°C to 70°C	MC6809P
	1.0 MHz	−40°C to 85°C	MC6809CP
	1.5 MHz	0°C to 70°C	MC68A09P
	1.5 MHz	−40°C to 85°C	MC68A09CP
	2.0 MHz	0°C to 70°C	MC68B09P
	2.0 MHz	−40°C to 85°C	MC68B09CP
Cerdip S Suffix	1.0 MHz	0°C to 70°C	MC6809S
	1.0 MHz	−40°C to 85°C	MC6809CS
	1.5 MHz	0°C to 70°C	MC68A09S
	1.5 MHz	−40°C to 85°C	MC68A09CS
	2.0 MHz	0°C to 70°C	MC68B09S
	2.0 MHz	−40°C to 85°C	MC68B09CS

3
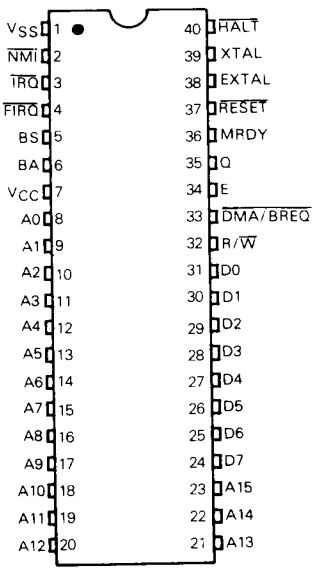
PIN ASSIGNMENT