查询UPD168112K9-5B4-A供应商

DATA SHEET

NEC

MOS INTEGRATED CIRCUIT

μPD168112

SERIAL CONTROL H-BRIDGE DRIVER FOR CAMERA LENS DRIVING

DESCRIPTION

The μPD168112 is a monolithic 6-channel H-bridge driver that consists of a CMOS controller and a MOS output stage. Compared with existing drivers that use bipolar transistors, this H-bridge driver can lower the current consumption and voltage loss at the output stage thanks to employment of a MOS process. This product employs a P-channel MOSFET on the high side of the output stage, eliminating the need for a charge pump, so that the circuit current consumption can be substantially reduced during operation.

In the μPD168112 driving a stepper motor, DC motor, or coil can be selected by serial control, making this product ideal for driving the motor of a digital still camera.

FEATURES

- Six H-bridge circuits using power MOSFET
- Motor control using serial data (6 bytes of 8-bit configuration)
  - Data is input MSB first.
  - Pulse cycle, number of pulses, and output current value can be set.
- Input logic frequency: 6 MHz MAX.
- 3 V power supply
  - Minimum operating power supply voltage: V_{DD} = 2.7 V
- Undervoltage lockout circuit
  - Shuts down the internal circuit at V_{DD} = 1.7 V TYP.
- 48-pin WQFN

ORDERING INFORMATION

Part Number	Package
μPD168112K9-5B4-A	48-pin plastic WQFN (7 mm x 7 mm)

The information in this document is subject to change without notice. Before using this document, please confirm that this is the latest version.
Not all products and/or types are available in every country. Please check with an NEC Electronics sales representative for availability and additional information.

Document No. S15866EJ1V0DS00 (1st edition)
Date Published May 2003 NS CP(K)
Printed in Japan

© NEC Electronics Corporation 2003

PIN CONFIGURATION

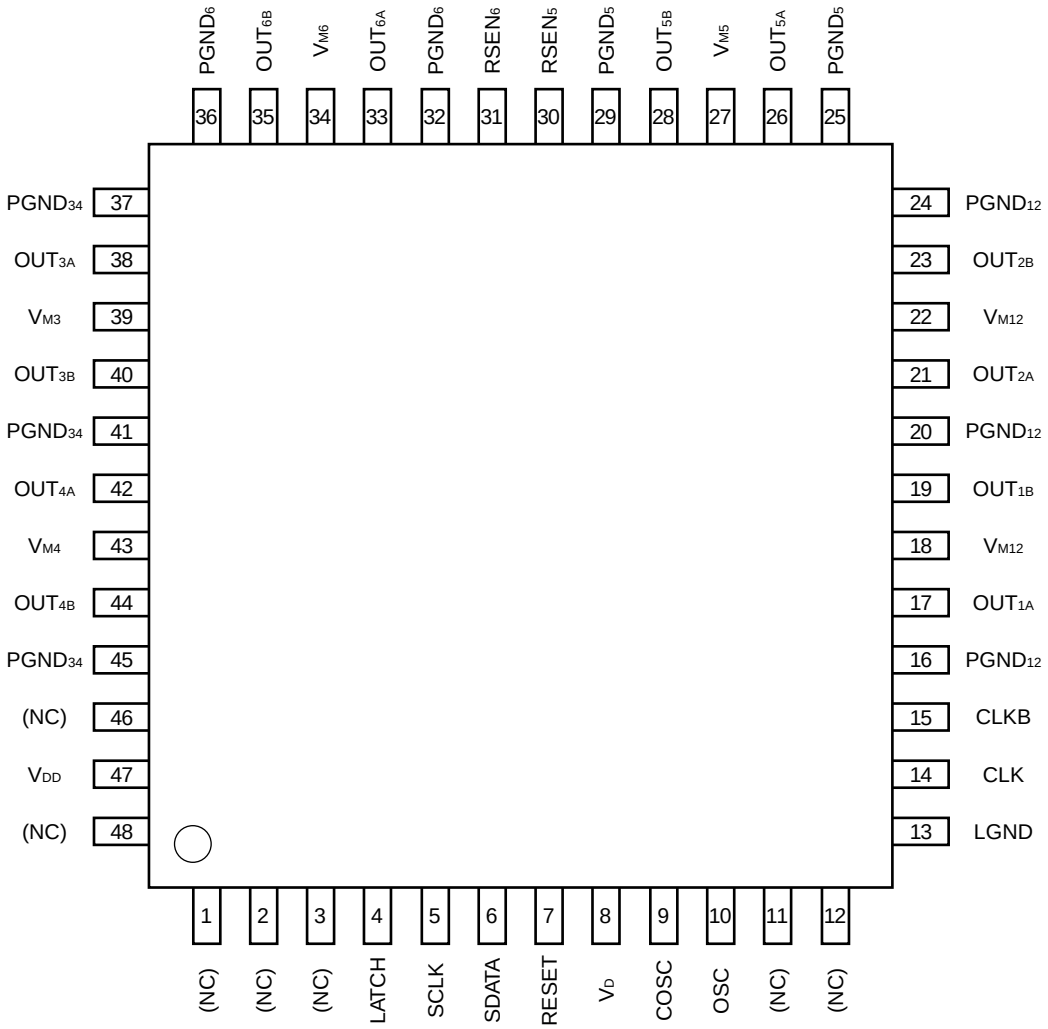

PIN LIST

Package: 48-pin WQFN

No.	Pin Name	Pin Function	No.	Pin Name	Pin Function
1	(NC)	(Not used)	25	$PGND_5$	GND pin of motor block of channel 5
2	(NC)	(Not used)	26	OUT_{5A}	Output A of channel 5
3	(NC)	(Not used, used for test function)	27	V_{M5}	Power pin of motor block of channel 5
4	LATCH	Serial data latch input	28	OUT_{5B}	Output B of channel 5
5	SCLK	Serial clock input	29	$PGND_5$	GND pin of motor block of channel 5
6	SDATA	Serial data input	30	$RSEN_5$	Resistor connection for channel 5 current detection
7	RESET	Reset input	31	$RSEN_6$	Resistor connection for channel 6 current detection
8	V_D	Sync signal input	32	$PGND_6$	GND pin of motor block of channel 6
9	COSC	(Constant current) Capacitor connection for triangular wave generation	33	OUT_{6A}	Output A of channel 6
10	OSC	(Stepper motor, DC motor) Capacitor connection for triangular wave generation	34	V_{M6}	Power pin of motor block of channel 6
11	(NC)	(Not used)	35	OUT_{6B}	Output B of channel 6
12	(NC)	(Not used)	36	$PGND_6$	GND pin of motor block of channel 6
13	LGND	GND pin of control block	37	$PGND_{34}$	GND pin of motor block of channels 3 and 4
14	CLK	Original oscillation clock input	38	OUT_{3A}	Output A of channel 3
15	CLKB	Original oscillation clock output	39	V_{M3}	Power pin of motor block of channel 3
16	$PGND_{12}$	GND pin of motor block of channels 1 and 2	40	OUT_{3B}	Output B of channel 3
17	OUT_{1A}	Output A of channel 1	41	$PGND_{34}$	GND pin of motor block of channels 3 and 4
18	V_{M12}	Power pin of motor block of channels 1 and 2	42	OUT_{4A}	Output A of channel 4
19	OUT_{1B}	Output B of channel 1	43	V_{M4}	Power pin of motor block of channel 4
20	$PGND_{12}$	GND pin of motor block of channels 1 and 2	44	OUT_{4B}	Output B of channel 4
21	OUT_{2A}	Output A of channel 2	45	$PGND_{34}$	GND pin of motor block of channels 3 and 4
22	V_{M12}	Power pin of motor block of channels 1 and 2	46	(NC)	(Not used)
23	OUT_{2B}	Output B of channel 2	47	V_{DD}	Power pin of control block
24	$PGND_{12}$	GND pin of motor block of channels 1 and 2	48	(NC)	(Not used)

PIN FUNCTIONS

Pin Name	Detailed Pin Function
RESET	Initializes the internal circuitry of the IC. The output goes into a Hi-Z state and the registers are initialized. When a stepper motor is driven, driving is started with phase A at +100% and phase B at 0%.
CLK	Inputs CLK from an external source for generating CLK that serves as a reference of the duty factor of a DC motor or pulse cycle of a stepper motor.
CLKB	Outputs the signal input from CLK via the oscillator.
LATCH	Command input enable signal. Equivalent to chip select signal from a microcontroller.
SCLK	CLK signal for inputting a command. When data is transmitted, this signal is transmitted in synchronization with the data. The contents of SDATA are read as data at the rising edge of SCLK.
SDATA	Command data input signal. Initialization is performed at addresses 0 and 1, and the contents of addresses 2 to 5 specify how the motor is to be driven.
V_D	Pin that inputs a sync signal. The driver that drives a stepper motor outputs signals after wait time (set by address 1) has elapsed after V_D has risen. The output timing is always constant if the V_D signal is periodically input, even if the timing of serial input changes. The driver starts outputting signals at the falling edge of the LATCH signal, not in synchronization with V_D, when a DC motor or a constant current is driven.
COSC	Pin that connects a capacitor to a triangular wave generator that drives a constant current. Connect a capacitor of 100 to 330 pF between this pin and GND.
OSC	Pin that connects a capacitor to a triangular wave generator that drives a stepper motor or a DC motor. Connect a capacitor of 100 to 330 pF between this pin and GND.
RSEN	Connects a detector resistor to the constant-current detector.

Remark Hi-Z: High impedance

BLOCK DIAGRAM

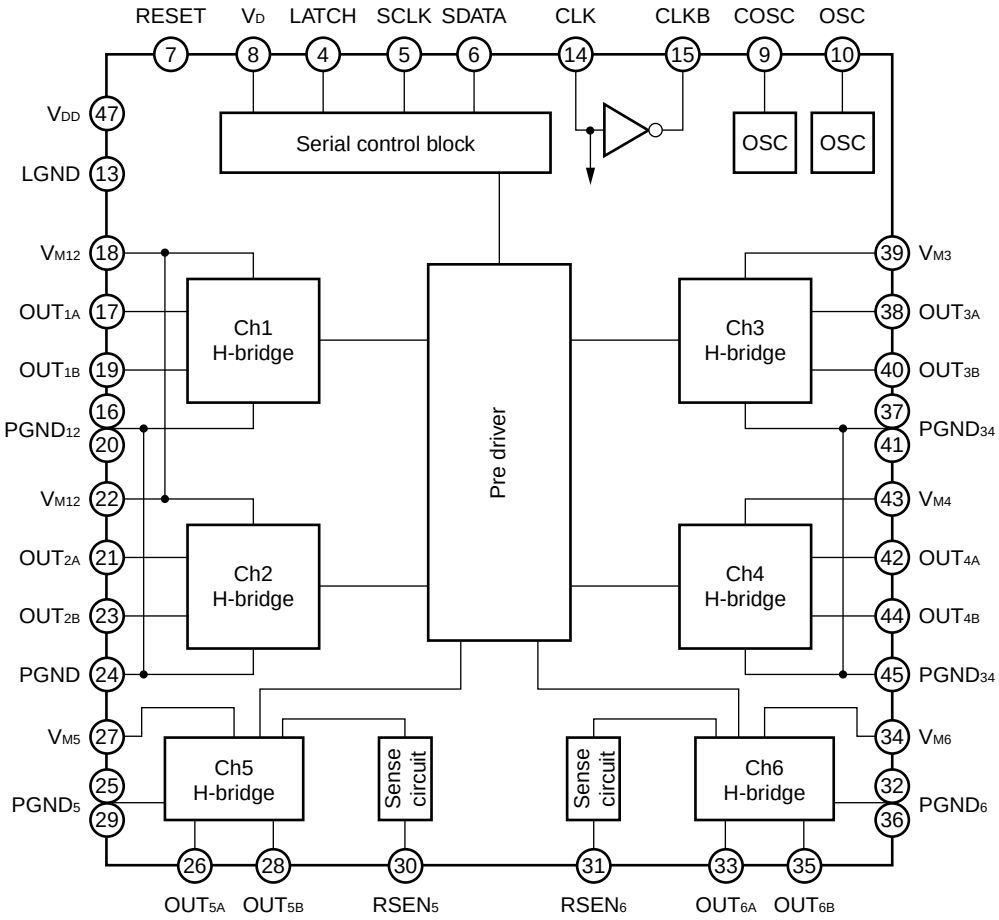

STANDARD CONNECTION EXAMPLES

(1) When address 0 (D1, D0) = (0, 0)

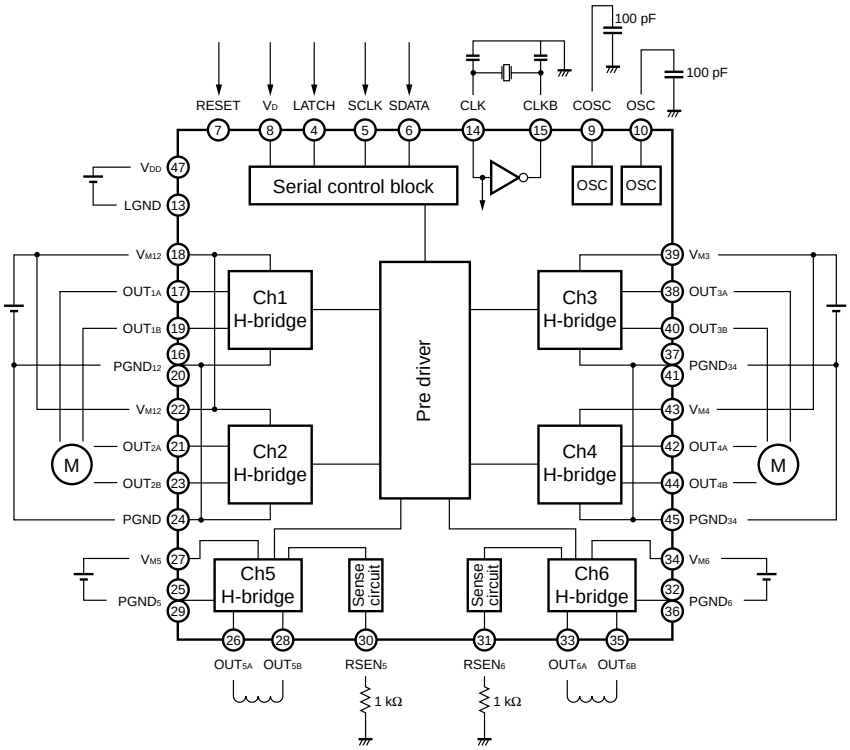

(2) When address 0 (D1, D0) = (0, 1)

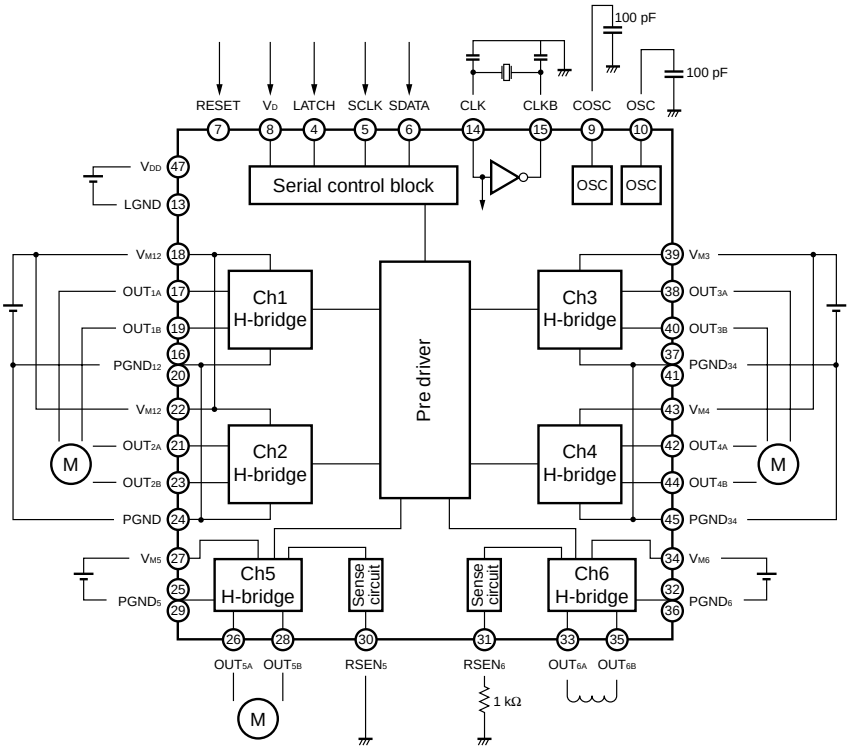

(3) When address 0 (D1, D0) = (1, 0)

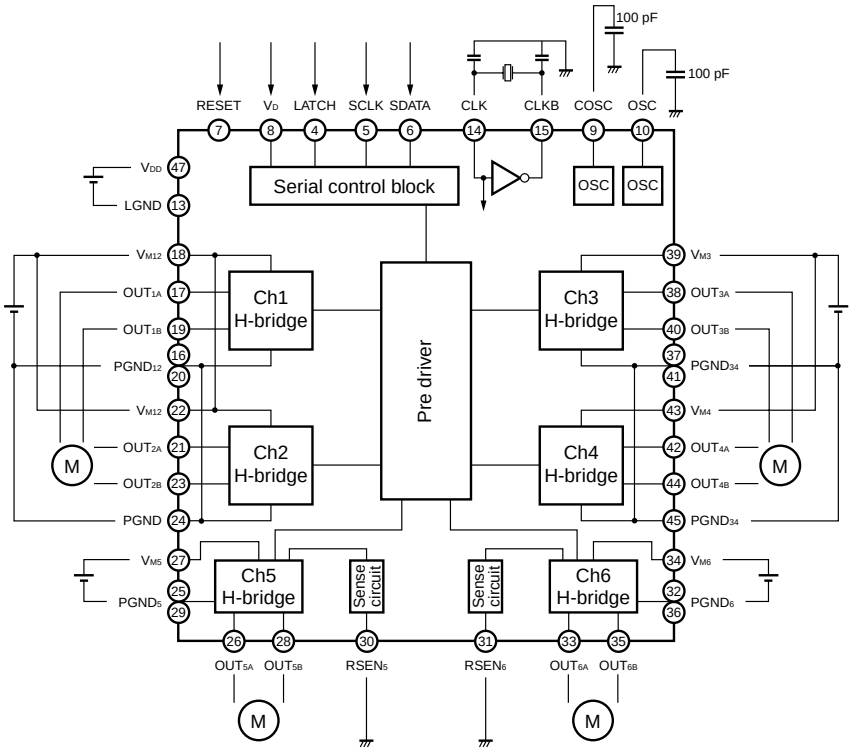

(4) When address 0 (D1, D0) = (1, 1)

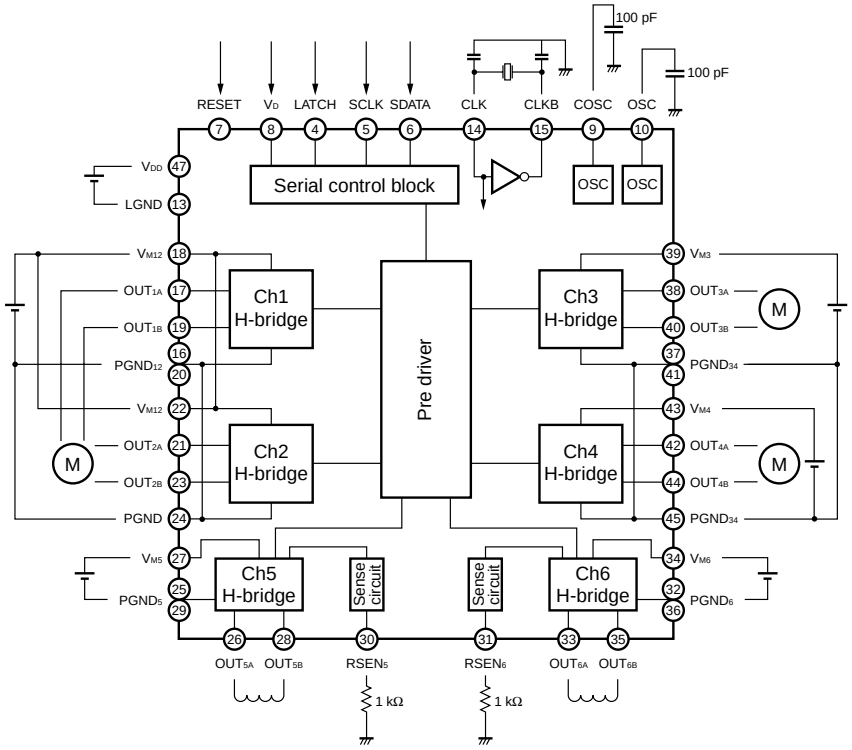

COMMAND INPUT TIMING CHART

Setting Example

Stepper motor Starts output after wait time synchronized with rising of V_D has elapsed.

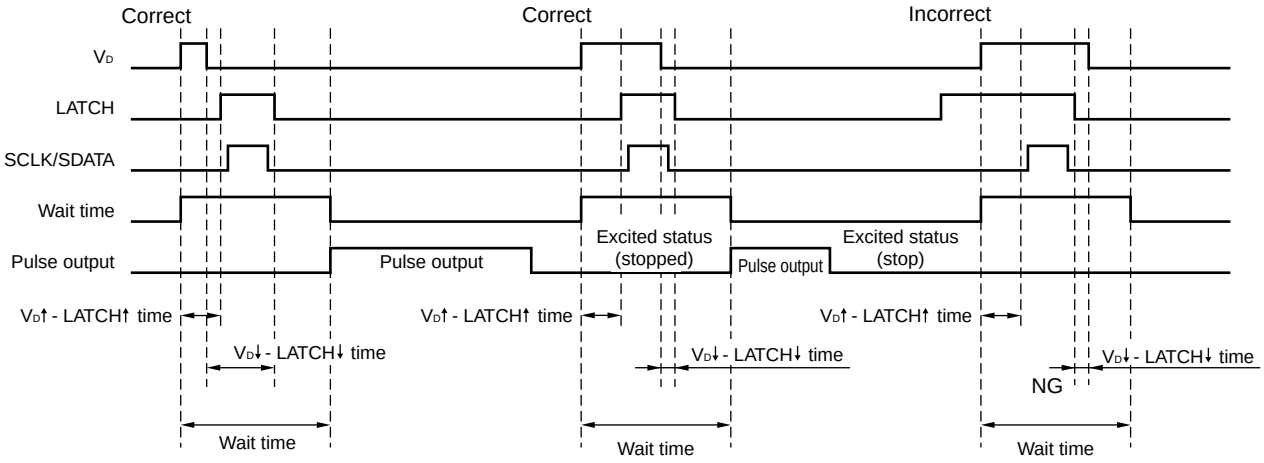

DC motor/coil Starts output after LATCH has fallen, regardless of V_D.

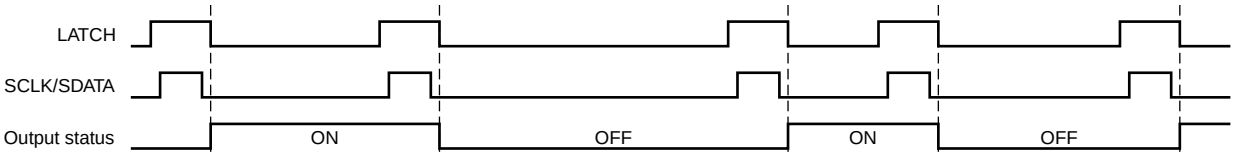

V_D must rise before LATCH rises (200 ns MIN.). V_D must fall before LATCH falls (200 ns MIN.). In addition to the operations shown above, an operation in which the V_D signal overlaps the LATCH signal is incorrect.

If data related to a stepper motor (addresses 3–1 to 3–4) is input during the wait time, the previous data is ignored. If data related to a DC motor coil (addresses 4 and 5) is input during the wait time, all the data is valid.

Example of Address Setting

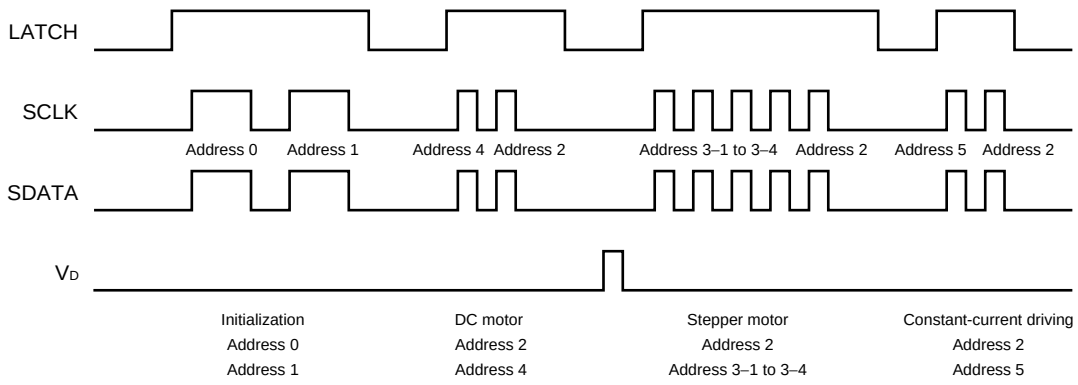

Be sure to perform initialization (addresses 0 and 1) immediately and after power application and RESET. Transmit the data of only addresses 0 and 1 for the initialization operation. After the initialization operation, the system can be controlled simply by inputting driving data (addresses 2 to 5). To execute initialization again, the RESET pin must be mode high level.

To set a stepper motor, be sure to input the V_D signal. If only the V_D signal is input, the previous status is held and the output does not change.

OUTPUT TIMING CHART

Two-phase Excitation Output Mode

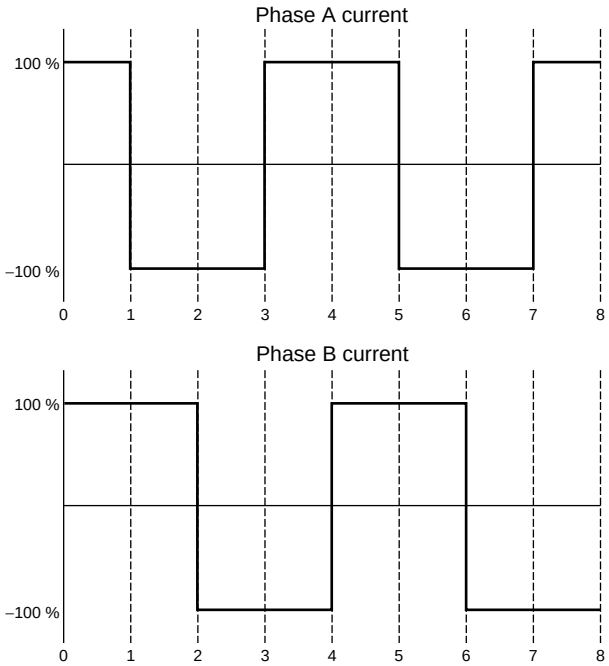

1-2 Phase Excitation Output Mode

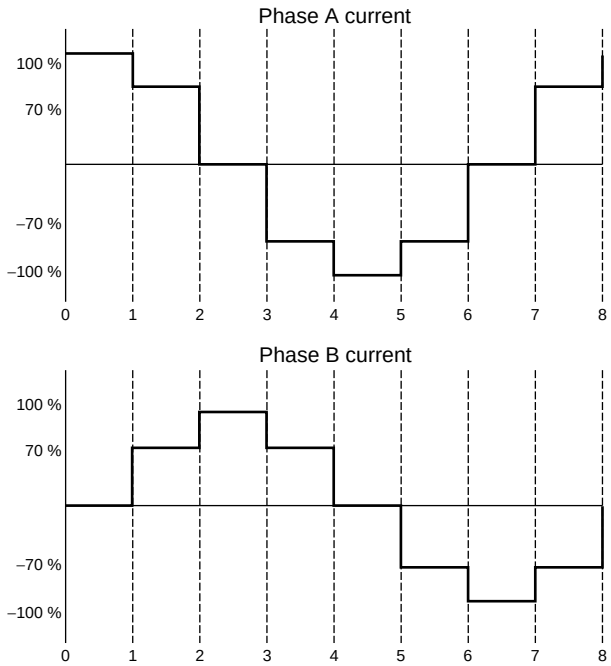

The horizontal axis of the above charts indicates the number of steps. The above charts show an example in the CW (forward) mode.

The current flowing into phases A and B is positive in the direction from OUT pin A to OUT pin B, and negative in the direction from OUT pin B to OUT pin A.

FUNCTIONAL DESCRIPTION

Serial Control

All information for driving the motor is processed by serial data from the CPU. The following parameters can be set by commands.

- Wait value for setting timing when a stepper motor is driven
- Motor current, motor revolution direction, and output excitation mode
- Pulse cycle, and number of pulses

Each command is assigned an address. Each data can be updated by inputting 8-bit data. For the configuration of the data and details of commands, refer to **SERIAL INTERFACE SPECIFICATIONS** on page 12.

2-phase Excitation Mode

By allowing a current of ±100% to flow into output phases A and B, the motor can be driven with a large torque. The motor can be stopped in electrical cycle angle units of 90°. The two-phase excitation mode or 1-2 phase excitation mode is selected by a command.

1-2 Phase Excitation Mode

By allowing a current of ±100% to flow into either output phase A or B and a current of ±70% to flow into the other phase, the motor can be positioned with an accuracy higher than that in the two-phase excitation mode. The motor can be stopped in electrical cycle angle units of 45°.

The two-phase excitation mode or 1-2 phase excitation mode is selected by a command.

Reset Function

An initialization operation is performed and all the internal data is cleared to 0 when RESET = low level. The output remains in the Hi-Z state. When RESET = high level, commands can be input. Be sure to perform a reset operation after power application. When RESET = low level, the internal circuitry is stopped whenever possible, so that the self current consumption can be reduced. When input of the external CLK is stopped, the current consumption can be lowered to 1 μA MAX.

Power Application Sequence

This IC has a logic power supply (V_{DD}) pin and an output power supply (V_M) pin.

To turn on power, turn on V_{DD} and then V_M.

To turn off power, turn off V_M with V_{DD} on, and then turn off V_{DD}.

(V_{DD} and V_M can also be turned on/off at the same time.)

SERIAL INTERFACE SPECIFICATIONS

The internal data is determined by inputting 8-bit serial data synchronized with serial clock CLK while LATCH = high level, and then lowering LATCH. Serial data is input from the LSB (D0) to the MSB (D7).

SDATA: Data is loaded to the internal circuitry at the rising edge of SCLK when LATCH = high level.
LATCH: Inputting SDATA is prohibited when LATCH is low level. Inputting SDATA is enabled when it is high level. The internal data is determined at the negative transition of LATCH (high level → low level).

Because this IC uses the external CLK, OSC_{IN}, to generate the internal timing, the set values vary depending on the frequency of OSC_{IN}. An example where OSC_{IN} = 5 MHz is given below. To input a frequency other than 5 MHz to OSC_{IN}, use the following expression. This applies to the serial registers marked ☆ in **SERIAL REGISTER DETAILS** on page 16 and 19.

Time: Set value = Setting example x (5/OSC_{IN} [MHz])
Frequency: Set value = Setting example x (OSC_{IN} [MHz] /5)

Data Configuration

Data is configured of 8 bits.
Addresses are set in the order of command input. Six types of addresses, 0 to 5, are used.

bit	D7	D6	D5	D4	D3	D2	D1	D0
	MSB							LSB

For how to set data, refer to **Serial Register List** on page 14 and 15 and **SERIAL REGISTER DETAILS** on page 16.
The following chart shows an example of serial command waveforms.

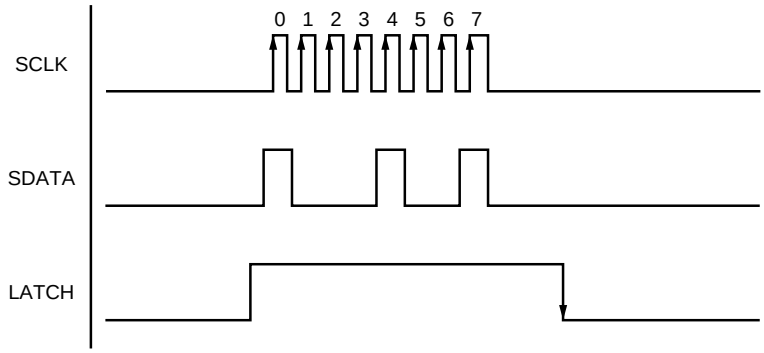

Data of one motor can be input in accordance with the motor driving data specifications that are set while LATCH = high level. The input data is loaded in 8-bit units when SCLK = low level → high level after LATCH = low level → high level, and the data is determined when LATCH = high level → low level.
Addresses 0 and 1 are used to perform initialization such as drive output settings. Turning on/off the motor and the number of pulses are set by addresses 2 to 5. Once initialization has been performed, therefore, the motor can be controlled simply by transmitting the drive data of addresses 2 to 5.

The stepper motor operates in synchronization with the V_D signal. To update data, be sure to input the V_D signal (for details, refer to **COMMAND INPUT TIMING CHART** on page 8). When only the V_D signal is input, the previous status is retained and the output does not change.

SERIAL DATA INPUT SEQUENCE

The μPD168112 can control driving of two or more motors with only a few CPU signals by using a serial data input method. The serial data is input as follows.

(1) Input addresses 0 and 1 after power application and initialization.
(2) Input addresses 3, 4, and 5, depending on the type of motor to be driven.
(3) Input address 2 to specify the motor to be driven.
(4) Only addresses 3 to 5 and 2 have to be input subsequently to specify driving.

To perform an initialization operation such as selecting the motor, initialize the internal registers by using the RESET pin.

Operation sequence when serial data is input

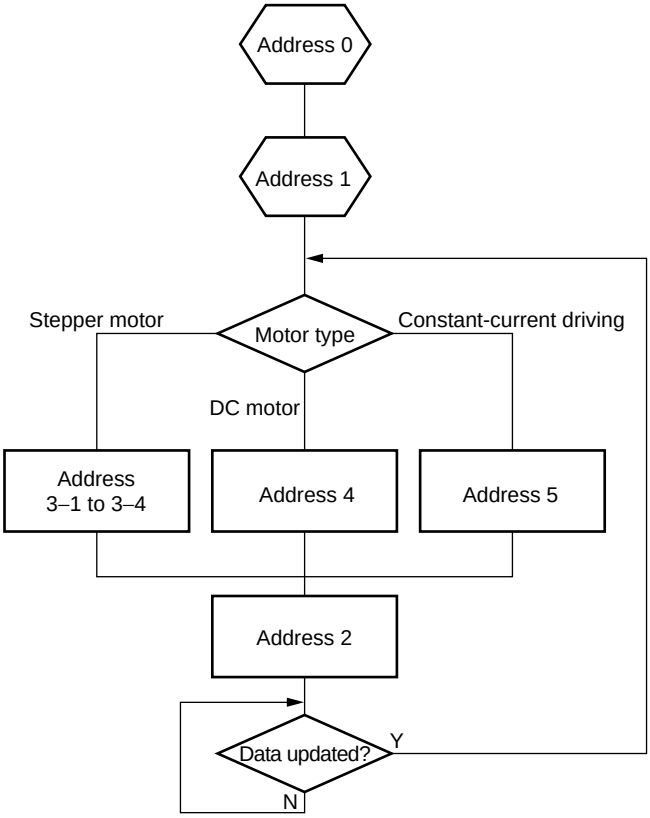

-- Initialization operation --
<1> Input address 0.
<2> Input address 1.
-- Detailed drive settings --
<3> Set addresses 3, 4, or 5.
(a) To drive stepper motor
Input 4 bytes, addresses 3–1, 3–2, 3–3, and 3–4.
(b) To drive DC motor
Input address 4.
(c) For constant-current driving
Input address 5.
-- Specifying motor to be driven --
<4> Input address 2 and set the data.

ADDRESS LIST

Address		Item to Be Set
Address 0 (initial setting)		Initial setting 1 (motor selection), wait value
Address 1 (initial setting)		Initial setting 2 (test function)
Address 2 (motor specification)		Specifying motor to be driven (selecting output channel)
Address 3 (stepper motor)	3–1	Motor on/off, revolution direction, driving mode
	3–2	Pulse cycle
	3–3	Number of pulses (lower)
	3–4	Number of pulses (higher)
Address 4 (DC motor)		DC motor driving
Address 5 (solenoid)		Constant-current driving

Table. Serial Register List (1/2)

Bit	Address 0
7	Wait value setting 5
6	Wait value setting 4
5	Wait value setting 3
4	Wait value setting 2
3	Wait value setting 1
2	Wait value setting 0
1	Motor selection 1
0	Motor selection 0

Bit	Address 1
7	(Reserved)
6	(Reserved)
5	(Reserved)
4	(Reserved)
3	(Reserved)
2	(Reserved)
1	(Reserved)
0	(Reserved)

Bit	Address 2
7	(Reserved)
6	(Reserved)
5	(Reserved)
4	(Reserved)
3	(Reserved)
2	Setting motor 2
1	Setting motor 1
0	Setting motor 0

Table. Serial Register List (2/2)

Bit	Address 3–1
7	(Reserved)
6	(Reserved)
5	(Reserved)
4	(Reserved)
3	(Reserved)
2	Motor driving mode setting
1	Revolution direction
0	Motor on/off

Bit	Address 3–2
7	Stepper motor pulse cycle 7
6	Stepper motor pulse cycle 6
5	Stepper motor pulse cycle 5
4	Stepper motor pulse cycle 4
3	Stepper motor pulse cycle 3
2	Stepper motor pulse cycle 2
1	Stepper motor pulse cycle 1
0	Stepper motor pulse cycle 0

Bit	Address 3–3
7	Number of stepper motor pulses 7
6	Number of stepper motor pulses 6
5	Number of stepper motor pulses 5
4	Number of stepper motor pulses 4
3	Number of stepper motor pulses 3
2	Number of stepper motor pulses 2
1	Number of stepper motor pulses 1
0	Number of stepper motor pulses 0

Bit	Address 3–4
7	Number of stepper motor pulses 15
6	Number of stepper motor pulses 14
5	Number of stepper motor pulses 13
4	Number of stepper motor pulses 12
3	Number of stepper motor pulses 11
2	Number of stepper motor pulses 10
1	Number of stepper motor pulses 9
0	Number of stepper motor pulses 8

Bit	Address 4
7	Output duty setting 4
6	Output duty setting 3
5	Output duty setting 2
4	Output duty setting 1
3	Output duty setting 0
2	Brake mode
1	Revolution direction
0	Motor on/off

Bit	Address 5
7	Current value setting 4
6	Current value setting 3
5	Current value setting 2
4	Current value setting 1
3	Current value setting 0
2	(Reserved)
1	Excitation direction
0	Excitation on/off

SERIAL REGISTER DETAILS

Address 0

This address selects the types of motors to be combined and a wait value when a stepper motor is to be driven.

bit	D7	D6	D5	D4	D3	D2	D1	D0
Data	Wait value setting						Motor selection	

• Motor selection

The types of the motors allocated to the six channels to drivers are specified by data D0 to D1.

D1	D0	Ch1	Ch2	Ch3	Ch4	Ch5	Ch6
0	0	Stepper motor 1		Stepper motor 2		Constant current 1	Constant current 2
0	1	Stepper motor 1		Stepper motor 2		DC motor 1	Constant current 1
1	0	Stepper motor 1		Stepper motor 2		DC motor 1	DC motor 2
1	1	Stepper motor 1		DC motor 1	DC motor 2	Constant current 1	Constant current 2

☆ • Wait value

When the stepper motor is to be controlled, counting is started from the rising of the V_D signal and the motor is excited when the count value reaches 0. Even if transmission of serial data is delayed by the wait value, the stepper motor can be driven at a predetermined timing if the V_D signal is periodically input. Note that the wait value must not be set to 0. The wait time can be set in a range of 32 to 2016 μs with a resolution of 32 μs using data D2 to D7.

Example of setting wait value

D7.....D2	Set value (μs)
000000	Input prohibited
000001	32
000010	64
:	:
111101	1952
111110	1984
111111	2016

Address 1

This address is used to test the internal functions of the IC.

bit	D7	D6	D5	D4	D3	D2	D1	D0
Data	(Test function)							

• Test function

The test function is used to check the internal operations of the IC. For usual use, input 0 to D0 to D7.

Address 2

This address is used to select the motor to be driven. Input drive data by using addresses 3 to 5, and select the type of the motor using address 2.

bit	D7	D6	D5	D4	D3	D2	D1	D0
Data	(Reserved)					Motor to be selected		

• Motor to be selected

Select the type of the motor to be driven using D0 to D2. The motor that can be selected is determined by the motor selection data of address 0. A motor type that does not match the motor selection data of address 0 cannot be selected.

The data of addresses 3 to 5 and the motor type of address 2 must match. For details, refer to **SERIAL DATA INPUT SEQUENCE** on page 13.

D2	D1	D0	Motor selection (D0 to D1 of address 0)			
			(D1, D0) = (0, 0)	(D1, D0) = (0, 1)	(D1, D0) = (1, 0)	(D1, D0) = (1, 1)
0	0	0	Stepper motor 1	Stepper motor 1	Stepper motor 1	Stepper motor 1
0	0	1	Stepper motor 2	Stepper motor 2	Stepper motor 2	–
0	1	0	–	DC motor 1	DC motor 1	DC motor 1
0	1	1	–	–	DC motor 2	DC motor 2
1	0	0	Constant current 1	–	–	Constant current 1
1	0	1	Constant current 2	Constant current 1	–	Constant current 2
1	1	0	–	–	–	–
1	1	1	–	–	–	–

Address 3

This address is used to specify how the stepper motor is to be driven. Before setting this address, stepper motor 1 or 2 must be selected using address 2. Addresses 3–1 to 3–4 are used to specify the setting of the stepper motor. Therefore, a total of 4 bytes are input.

Address 3–1

bit	D7	D6	D5	D4	D3	D2	D1	D0
Data	(Reserved)					**Note 3**	**Note 2**	**Note 1**

Notes 1. Motor on/off

2. Revolution direction

3. Motor driving mode

• Motor on/off

Whether motor is driven or not is specified by D0.

When D0 = 0, the output goes into a Hi-Z state and the motor is turned off. Even if the number of pulses is set at this time, the motor is not excited. Internally, the phase does not advance. When D0 = 1, the output is turned on and the motor is driven according to the specified number of pulses and the specified pulse cycle.

D0	Driving mode
0	Hi-Z
1	Excited

• Revolution direction

D1 specifies the revolution direction of the motor.

In the CW mode, the current of phase B is output, 90° degrees in phase behind the current of phase A (forward mode).

In the CCW mode, the current phase B is output, 90° degrees in phase ahead of the current phase A (reverse mode).

D1	Operation mode
0	CW mode (forward revolution)
1	CCW mode (reverse revolution)

• Motor driving mode

D2 is used to select the two-phase excitation or 1-2 phase excitation mode. When D2 = 0, the 1-2 phase excitation mode is selected. When D2 = 1, the two-phase excitation mode is selected.

D2	Operation mode
0	1-2 phase excitation
1	2-phase excitation

Address 3–2

bit	D7	D6	D5	D4	D3	D2	D1	D0
Data	Pulse cycle							

• Pulse cycle

D0 to D7 of address 3–2 specifies the pulse cycle per step.

The pulse cycle can be set in a range of 0 to 25.5 ms with a resolution of 100 μs.

If the 8-bit value is 0, no pulse is output and the driving status is maintained.

Example of pulse cycle setting

D7.....D0	Set value (μs)
00000000	0
00000001	100
00000010	200
:	:
11111101	25300
11111110	25400
11111111	25500

Address 3–3 and 3–4

bit	D7	D6	D5	D4	D3	D2	D1	D0
Data	Number of pulses							

☆ • Number of pulses

Data of 16 bits, with the lower 8 bits set by address 3–3 and the higher 8 bits set by address 3–4, sets the number of pulses of the motor.

Number of pulses = (D0 to D7 of address 3–4) x 256 + (D0 to D7 of address 3–3)

If the 16-bit value is 0, no pulse is output and the driving status is maintained.

Address 3–4	Address 3–3	Set value
D7.....D0	D7.....D0	
00000000	00000000	0
00000000	00000001	1
00000000	00000010	2
:	:	:
11111111	11111101	65533
11111111	11111110	65534
11111111	11111111	65535

Address 4

The address specifies how a DC motor is to be driven. To use this address, DC motor 1 or DC motor 2 must be selected using address 2.

bit	D7	D6	D5	D4	D3	D2	D1	D0
Data	Output duty factor					**Note 3**	**Note 2**	**Note 1**

Notes 1. Motor on/off

2. Revolution direction

3. Brake mode

• Motor on/off

D0 specifies whether the motor is to be driven. When D0 = 0, the motor is stopped (stop mode). The output status in the stop mode is Hi-Z or short brake mode, depending on the value of D2, which selects a brake mode. When D0 = 1, the start mode is selected and the motor is driven in the specified revolution direction and with the specified output duty factor.

D0	Driving mode
0	Stop mode
1	Start mode

• Revolution direction

D1 selects the revolution direction of the motor. When the motor revolves in the forward direction, the current flows from phase A to B. When the motor revolves in the reverse direction, the current flows from phase B to A.

D1	Operation mode
0	Current direction A → B (forward direction)
1	Current direction B → A (reverse direction)

• Brake mode

D2 is used to select the output status in the stop mode.

When D2 = 0, the output goes into a Hi-Z state. When D2 = 1, the high side of both phase A and B is on and the short brake status is selected. At this time, the output goes high level.

D2	Operation mode
0	Hi-Z
1	Short brake (both phases A and B output high level)

• Output duty factor

Data of D3 to D7 is used to select the output duty factor for current control. The output duty factor can be selected in 32 steps. The operating frequency of the output is the frequency oscillated by the oscillator connected to COSC (100 kHz TYP.).

The following table shows the ideal set values.

D7.....D3	Output duty factor (%)	D7.....D3	Output duty factor (%)
00000	3.125	10000	53.125
00001	6.25	10001	56.25
00010	9.375	:	:
:	:	11101	93.75
01110	46.875	11110	96.875
01111	50	11111	100

Address 5

This address selects constant-current driving. To use this address, constant current 1 or constant current 2 must be selected using address 2.

bit	D7	D6	D5	D4	D3	D2	D1	D0
Data	Output current value					(Reserved)	**Note 2**	**Note 1**

Notes 1. Excitation on/off
2. Excitation direction

• Excitation on/off

D0 selects whether the coil is to be driven. When D0 = 0, the output goes into a Hi-Z state. When D0 = 1, the output is turned on, and the coil is driven in the specified revolution direction and with the specified output current.

D0	Driving mode
0	Hi-Z
1	Output ON

• Excitation direction

D1 selects the direction in which the coil is to be excited. In the forward direction, the current flows from phase A to B. In the reverse direction, the current flows from phase B to A.

D1	Operation mode
0	Current direction A → B (forward direction)
1	Current direction B → A (reverse direction)

• Output current value

Data of D3 to D7 selects the current value for constant-current control. These bits select the internal voltage that serves as a reference with a resolution of 20 mV. The current that flows to the output is {Set voltage value/RSEN x 1000}.

A voltage lower than 100 mV is fixed to 100 mV and a voltage exceeding 500 mV is fixed to 500 mV. Therefore, the reference voltage can be set in a range of 100 to 500 mV. The operating frequency of the output is the frequency oscillation by the oscillator connected to COSC (100 kHz TYP.).

Example: Where RSEN = 2 kΩ for constant-current driving at 100 mA
Set voltage value = 100 (mA) x 2 (kΩ) /1000
= 200 (mV)
→ (D7...D3) = (01010)

D7.....D3	Reference voltage (mV)	D7.....D3	Reference voltage (mV)
00000	100	10110	440
00001	100	10111	460
:	:	11000	480
00101	100	11001	500
00110	120	:	:
00111	140	11110	500
:	:	11111	500

ELECTRICAL SPECIFICATIONS

Absolute Maximum Ratings (T_A = 25°C, Glass epoxy board of 100 mm x 100 mm x 1 mm with copper foil area of 15%)

Parameter	Symbol	Condition	Rating	Unit
Power supply voltage	V_{DD}	Control block	–0.5 to +4.5	V
	V_M	Motor block	–0.5 to +6.0	V
Input voltage	V_{IN}		–0.5 to V_{DD} +0.5	V
Output pin voltage	V_{OUT}		6.2	V
DC output current Note	$I_{D(DC)}$	DC	±0.35	A/ch
Instantaneous output current	$I_{D(pulse)}$	PW < 10 ms, Duty ≤ 20%	±0.7	A/ch
Power consumption	P_T		1.0	W
Peak junction temperature	$T_{ch(MAX)}$		150	°C
Storage temperature	T_{stg}		–55 to +150	°C

Note Keep the total consumption from exceeding 1 W.

Caution Product quality may suffer if the absolute maximum rating is exceeded even momentarily for any parameter. That is, the absolute maximum ratings are rated values at which the product is on the verge of suffering physical damage, and therefore the product must be used under conditions that ensure that the absolute maximum ratings are not exceeded.

Recommended Operating Conditions (T_A = 25°C, Glass epoxy board of 100 mm x 100 mm x 1 mm with copper foil area of 15%)

Parameter	Symbol	Condition	MIN.	TYP.	MAX.	Unit
Power supply voltage	V_{DD}	Control block	2.7		3.6	V
	V_M	Motor block	2.7		5.5	V
Input voltage	V_{IN}		0		V_{DD}	V
DC output current	$I_{D(DC)}$	DC	–0.3		+0.3	A/ch
Instantaneous output current	$I_{D(pulse)}$	PW < 10 ms, Duty ≤ 20%	–0.6		+0.6	A/ch
External CLK input frequency	OSC_{IN}		3	5	6	MHz
SCLK input frequency	f_{CLK}				6	MHz
LATCH - SCLK time	f_{L-S}		200			ns
SDATA setup time	f_{SETUP}		80			ns
SDATA hold time	f_{HOLD}		80			ns
V_D↑ - LATCH ↑ time	$t_{VD-LATCH1}$		200			ns
V_D↓ - LATCH ↓ time	$t_{VD-LATCH2}$		200			ns
Operating temperature range	T_A		–10		75	°C

Electrical Characteristics (Unless otherwise specified, T_A = 25°C, V_{DD} = V_M = 3 V)

Parameter	Symbol	Condition	MIN.	TYP.	MAX.	Unit
V_{DD} pin current in standby mode	$I_{DD(STB)}$				1.0	μA
V_{DD} pin current in during operation	$I_{DD(ACT)}$				3.0	mA
V_M leakage current	$I_{M(off)}$	Per V_M pin, V_M = 5.5 V, in standby mode			1.0	μA
High-level input current	I_{IH}	V_{IN} = V_{DD}			50	μA
Low-level input current	I_{IL}	V_{IN} = 0 V	–1.0			μA
High-level input voltage	V_{IH}	2.7 V ≤ V_{DD} ≤ 3.6 V, input pin	0.7 x V_{DD}			V
Low-level input voltage	V_{IL}	2.7 V ≤ V_{DD} ≤ 3.6 V, input pin			0.3 x V_{DD}	V
Input hysteresis voltage	V_{hys}	Input pin		0.3		V
H-bridge on-state resistance	R_{on}	I_M = 0.3 A, sum of upper and lower stages			2.0	Ω
Output turn-on time	t_{on}	R_M = 20 Ω	0.02	0.7	2.0	μs
Output turn-off time	t_{off}		0.02	0.7	2.0	μs

Caution The undervoltage lockout circuit operates at 1.7 V TYP. and the output goes into a Hi-Z state. Internal data is reset.

PACKAGE DRAWING

48-PIN PLASTIC WQFN (7x7)

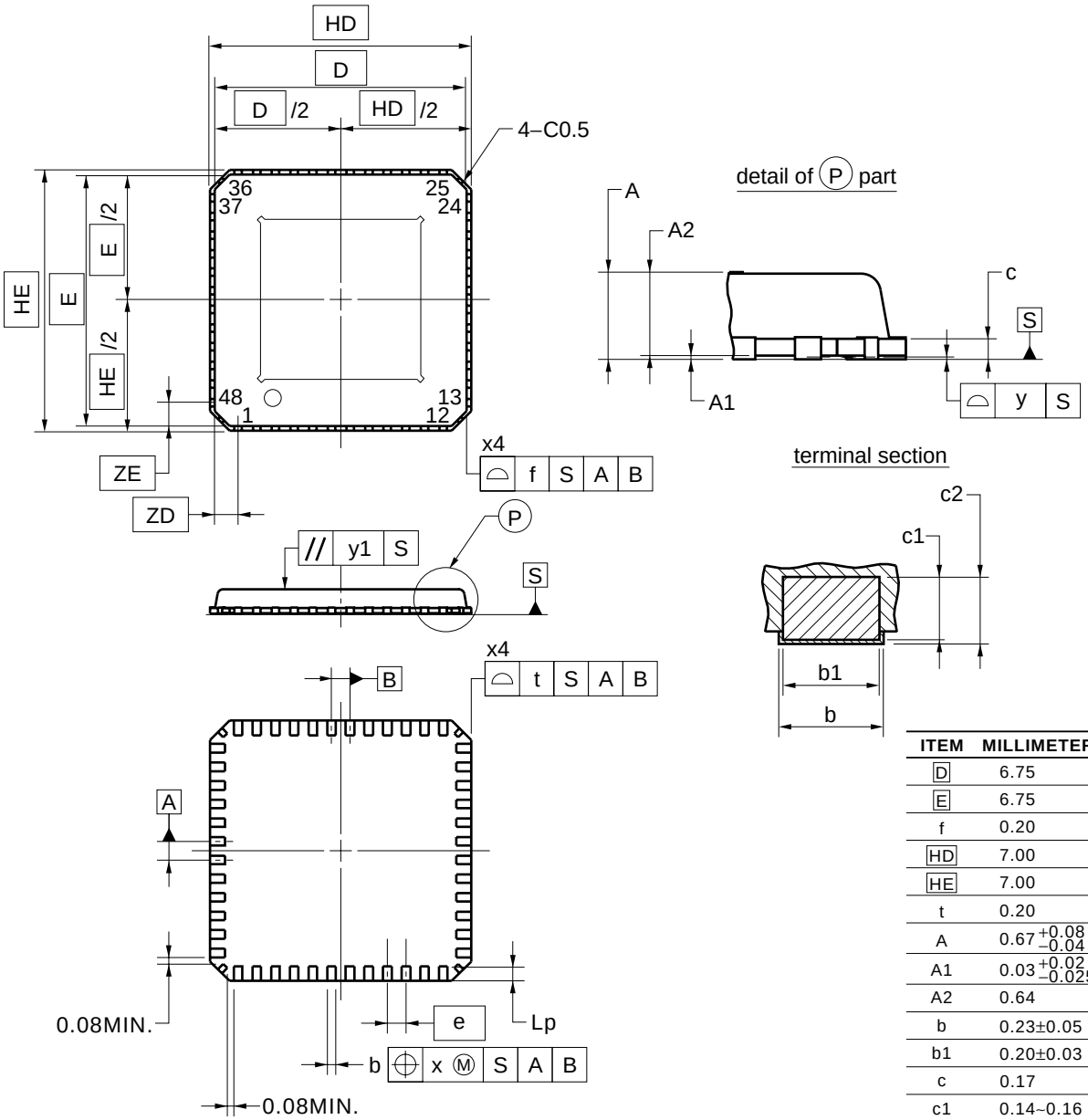

NOTE
"t" and "f" excludes mold flash

ITEM	MILLIMETERS
D	6.75
E	6.75
f	0.20
HD	7.00
HE	7.00
t	0.20
A	$0.67^{+0.08}_{-0.04}$
A1	$0.03^{+0.02}_{-0.025}$
A2	0.64
b	0.23±0.05
b1	0.20±0.03
c	0.17
c1	0.14~0.16
c2	0.14~0.20
e	0.50
Lp	0.40±0.10
x	0.05
y	0.08
y1	0.10
ZD	0.625
ZE	0.625

P48K9-50-5B4

RECOMMENDED SOLDERING CONDITIONS

The μPD168112 should be soldered and mounted under the following recommended conditions.

For soldering methods and conditions other than those recommended below, contact an NEC Electronics sales representative.

For technical information, see the following website.

Semiconductor Device Mount Manual (http://www.necel.com/pkg/en/mount/index.html)

Type of Surface Mount Device

μPD168112K9-5B4-A: 48-pin plastic WQFN (7 mm x 7 mm)

Process	Conditions	Symbol
Infrared reflow	Package peak temperature: 250°C, Time: 60 seconds MAX. (at 220°C or higher), Count: Three times or less, Exposure limit: 3 days [Note] (after that, prebake at 125°C for 10 hours), Flux: Rosin flux with low chlorine (0.2 Wt% or below) recommended	IR60-103-3

Note After opening the dry pack, store it a 2°C or less and 65% RH or less for the allowable storage period.

Caution Do not use different soldering methods together (except for partial heating).

NOTES FOR CMOS DEVICES

① PRECAUTION AGAINST ESD FOR SEMICONDUCTORS

Note:

Strong electric field, when exposed to a MOS device, can cause destruction of the gate oxide and ultimately degrade the device operation. Steps must be taken to stop generation of static electricity as much as possible, and quickly dissipate it once, when it has occurred. Environmental control must be adequate. When it is dry, humidifier should be used. It is recommended to avoid using insulators that easily build static electricity. Semiconductor devices must be stored and transported in an anti-static container, static shielding bag or conductive material. All test and measurement tools including work bench and floor should be grounded. The operator should be grounded using wrist strap. Semiconductor devices must not be touched with bare hands. Similar precautions need to be taken for PW boards with semiconductor devices on it.

② HANDLING OF UNUSED INPUT PINS FOR CMOS

Note:

No connection for CMOS device inputs can be cause of malfunction. If no connection is provided to the input pins, it is possible that an internal input level may be generated due to noise, etc., hence causing malfunction. CMOS devices behave differently than Bipolar or NMOS devices. Input levels of CMOS devices must be fixed high or low by using a pull-up or pull-down circuitry. Each unused pin should be connected to V_{DD} or GND with a resistor, if it is considered to have a possibility of being an output pin. All handling related to the unused pins must be judged device by device and related specifications governing the devices.

③ STATUS BEFORE INITIALIZATION OF MOS DEVICES

Note:

Power-on does not necessarily define initial status of MOS device. Production process of MOS does not define the initial operation status of the device. Immediately after the power source is turned ON, the devices with reset function have not yet been initialized. Hence, power-on does not guarantee out-pin levels, I/O settings or contents of registers. Device is not initialized until the reset signal is received. Reset operation must be executed immediately after power-on for devices having reset function.

Reference Documents

NEC Semiconductor Device Reliability/Quality Control System (C10983E)

Quality Grades On NEC Semiconductor Devices (C11531E)

- **The information in this document is current as of May, 2003. The information is subject to change without notice. For actual design-in, refer to the latest publications of NEC Electronics data sheets or data books, etc., for the most up-to-date specifications of NEC Electronics products. Not all products and/or types are available in every country. Please check with an NEC Electronics sales representative for availability and additional information.**
- No part of this document may be copied or reproduced in any form or by any means without the prior written consent of NEC Electronics. NEC Electronics assumes no responsibility for any errors that may appear in this document.
- NEC Electronics does not assume any liability for infringement of patents, copyrights or other intellectual property rights of third parties by or arising from the use of NEC Electronics products listed in this document or any other liability arising from the use of such products. No license, express, implied or otherwise, is granted under any patents, copyrights or other intellectual property rights of NEC Electronics or others.
- Descriptions of circuits, software and other related information in this document are provided for illustrative purposes in semiconductor product operation and application examples. The incorporation of these circuits, software and information in the design of a customer's equipment shall be done under the full responsibility of the customer. NEC Electronics assumes no responsibility for any losses incurred by customers or third parties arising from the use of these circuits, software and information.
- While NEC Electronics endeavors to enhance the quality, reliability and safety of NEC Electronics products, customers agree and acknowledge that the possibility of defects thereof cannot be eliminated entirely. To minimize risks of damage to property or injury (including death) to persons arising from defects in NEC Electronics products, customers must incorporate sufficient safety measures in their design, such as redundancy, fire-containment and anti-failure features.
- NEC Electronics products are classified into the following three quality grades: "Standard", "Special" and "Specific".
  The "Specific" quality grade applies only to NEC Electronics products developed based on a customer-designated "quality assurance program" for a specific application. The recommended applications of an NEC Electronics product depend on its quality grade, as indicated below. Customers must check the quality grade of each NEC Electronics product before using it in a particular application.
  "Standard": Computers, office equipment, communications equipment, test and measurement equipment, audio and visual equipment, home electronic appliances, machine tools, personal electronic equipment and industrial robots.
  "Special": Transportation equipment (automobiles, trains, ships, etc.), traffic control systems, anti-disaster systems, anti-crime systems, safety equipment and medical equipment (not specifically designed for life support).
  "Specific": Aircraft, aerospace equipment, submersible repeaters, nuclear reactor control systems, life support systems and medical equipment for life support, etc.

The quality grade of NEC Electronics products is "Standard" unless otherwise expressly specified in NEC Electronics data sheets or data books, etc. If customers wish to use NEC Electronics products in applications not intended by NEC Electronics, they must contact an NEC Electronics sales representative in advance to determine NEC Electronics' willingness to support a given application.

(Note)
(1) "NEC Electronics" as used in this statement means NEC Electronics Corporation and also includes its majority-owned subsidiaries.
(2) "NEC Electronics products" means any product developed or manufactured by or for NEC Electronics (as defined above).