查询STB5NC50供应商 捷多邦，专业PCB打样工厂，24小时加急出货

STP5NC50 - STP5NC50FP
STB5NC50 - STB5NC50-1

N-CHANNEL 500V - 1.3Ω - 5.5A TO-220/FP/D²PAK/I²PAK
PowerMesh™II MOSFET

TYPE	V_{DSS}	$R_{DS(on)}$	I_D
STP5NC50	500 V	< 1.5Ω	5.5A
STP5NC50FP	500 V	< 1.5Ω	5.5A
STB5NC50	500 V	< 1.5Ω	5.5A
STB5NC50-1	500 V	< 1.5Ω	5.5A

- TYPICAL R_{DS}(on) = 1.3Ω
- EXTREMELY HIGH dv/dt CAPABILITY
- 100% AVALANCHE TESTED
- NEW HIGH VOLTAGE BENCHMARK
- GATE CHARGE MINIMIZED

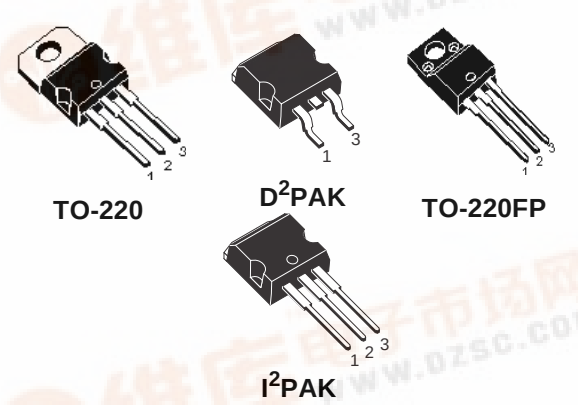

DESCRIPTION

The PowerMESH™II is the evolution of the first generation of MESH OVERLAY™. The layout refinements introduced greatly improve the Ron*area figure of merit while keeping the device at the leading edge for what concerns swithing speed, gate charge and ruggedness.

INTERNAL SCHEMATIC DIAGRAM

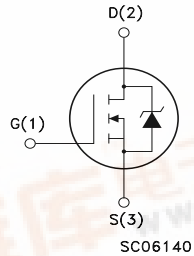

APPLICATIONS

- HIGH CURRENT, HIGH SPEED SWITCHING
- SWITH MODE POWER SUPPLIES (SMPS)
- DC-AC CONVERTERS FOR WELDING EQUIPMENT AND UNINTERRUPTIBLE POWER SUPPLIES AND MOTOR DRIVES

ABSOLUTE MAXIMUM RATINGS

Symbol	Parameter	Value		Unit
		STP5NC50 STB5NC50/-1	STP5NC50FP	
V_{DS}	Drain-source Voltage (V_{GS} = 0)	500		V
V_{DGR}	Drain-gate Voltage (R_{GS} = 20 kΩ)	500		V
V_{GS}	Gate- source Voltage	±30		V
I_D	Drain Current (continuos) at T_C = 25°C	5.5	5.5(*)	A
I_D	Drain Current (continuos) at T_C = 100°C	3.5	3.5(*)	A
I_{DM} (•)	Drain Current (pulsed)	22	22	A
P_{TOT}	Total Dissipation at T_C = 25°C	100	35	W
	Derating Factor	0.8	0.28	W/°C
dv/dt(1)	Peak Diode Recovery voltage slope	3.5		V/ns
V_{ISO}	Insulation Withstand Voltage (DC)	-	2500	V
T_j T_{stg}	Operating Junction Temperature Storage Temperature	-55 to 175 -65 to 175		°C °C

(*)Limited only by maximum temperature allowed

(•)Pulse width limited by safe operating area

(1)I_{SD} ≤5.5A, di/dt ≤100A/µs, V_{DD} ≤ $V_{(BR)DSS}$, T_j ≤ T_{JMAX}.

找PDF 维库一下 pdf.dzsc.com

THERMAL DATA

		TO-220 D^2PAK I^2PAK	TO-220FP	
Rthj-case	Thermal Resistance Junction-case Max	1.25	3.57	°C/W
Rthj-amb	Thermal Resistance Junction-ambient Max	62.5		°C/W
T_l	Maximum Lead Temperature For Soldering Purpose	300		°C

AVALANCHE CHARACTERISTICS

Symbol	Parameter	Max Value	Unit
I_{AR}	Avalanche Current, Repetitive or Not-Repetitive (pulse width limited by T_j max)	5.5	A
E_{AS}	Single Pulse Avalanche Energy (starting T_j = 25 °C, I_D = I_{AR}, V_{DD} = 50 V)	280	mJ

ELECTRICAL CHARACTERISTICS (TCASE = 25 °C UNLESS OTHERWISE SPECIFIED)

OFF

Symbol	Parameter	Test Conditions	Min.	Typ.	Max.	Unit
$V_{(BR)DSS}$	Drain-source Breakdown Voltage	I_D = 250µA, V_{GS} = 0	500			V
I_{DSS}	Zero Gate Voltage Drain Current (V_{GS} = 0)	V_{DS} = Max Rating V_{DS} = Max Rating, T_C = 125 °C			1 50	µA µA
I_{GSS}	Gate-body Leakage Current (V_{DS} = 0)	V_{GS} = ±30V			±100	nA

ON (1)

Symbol	Parameter	Test Conditions	Min.	Typ.	Max.	Unit
$V_{GS(th)}$	Gate Threshold Voltage	V_{DS} = V_{GS}, I_D = 250µA	2	3	4	V
$R_{DS(on)}$	Static Drain-source On Resistance	V_{GS} = 10V, I_D = 2 A		1.3	1.5	Ω

DYNAMIC

Symbol	Parameter	Test Conditions	Min.	Typ.	Max.	Unit
g_{fs} (1)	Forward Transconductance	V_{DS} > $I_{D(on)}$ x $R_{DS(on)max}$, I_D = 2.5A		4		S
C_{iss} C_{oss} C_{rss}	Input Capacitance Output Capacitance Reverse Transfer Capacitance	V_{DS} = 25V, f = 1 MHz, V_{GS} = 0		480 80 11.5		pF pF pF

ELECTRICAL CHARACTERISTICS
(CONTINUED)

SWITCHING ON

Symbol	Parameter	Test Conditions	Min.	Typ.	Max.	Unit
$t_{d(on)}$	Turn-on Delay Time	V_{DD} = 250V, I_D = 2.5A R_G = 4.7Ω V_{GS} = 10V (see test circuit, Figure 3)		14		ns
t_r	Rise Time			15		ns
Q_g	Total Gate Charge	V_{DD} = 400V, I_D = 5.5A, V_{GS} = 10V		17.5	24.5	nC
Q_{gs}	Gate-Source Charge			3		nC
Q_{gd}	Gate-Drain Charge			9		nC

SWITCHING OFF

Symbol	Parameter	Test Conditions	Min.	Typ.	Max.	Unit
$t_{r(Voff)}$	Off-voltage Rise Time	V_{DD} = 400V, I_D = 5.5A, R_G = 4.7Ω, V_{GS} = 10V (see test circuit, Figure 5)		12		ns
t_f	Fall Time			14		ns
t_c	Cross-over Time			20		ns

SOURCE DRAIN DIODE

Symbol	Parameter	Test Conditions	Min.	Typ.	Max.	Unit
I_{SD}	Source-drain Current				5.5	A
I_{SDM} (2)	Source-drain Current (pulsed)				22	A
V_{SD} (1)	Forward On Voltage	I_{SD} = 5.5A, V_{GS} = 0			1.6	V
t_{rr}	Reverse Recovery Time	I_{SD} = 5.5A, di/dt = 100A/µs, V_{DD} = 100V, T_j = 150°C (see test circuit, Figure 5)		360		ns
Q_{rr}	Reverse Recovery Charge			1.6		µC
I_{RRM}	Reverse Recovery Current			9		A

Note: 1. Pulsed: Pulse duration = 300 µs, duty cycle 1.5 %.
2. Pulse width limited by safe operating area.

Safe Operating Area for TO-220/D2PAK/I2PAK

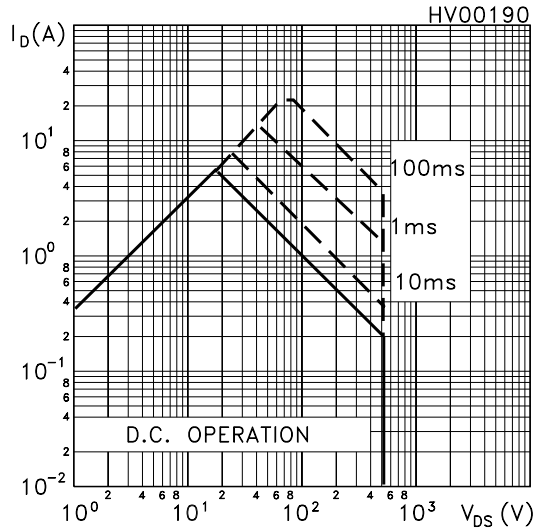

Safe Operating Area for TO-220FP

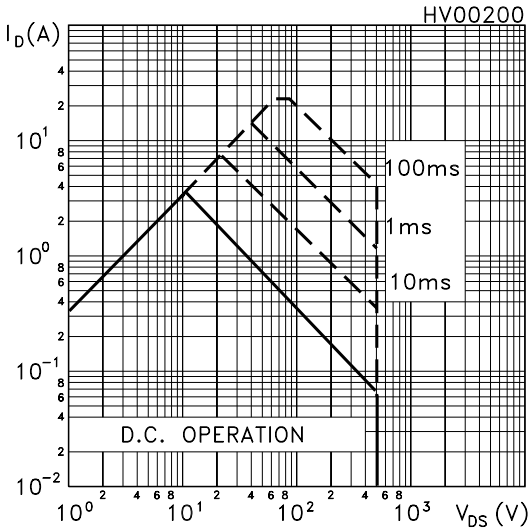

Thermal Impedence for TO-220/D2PAK/I2PAK

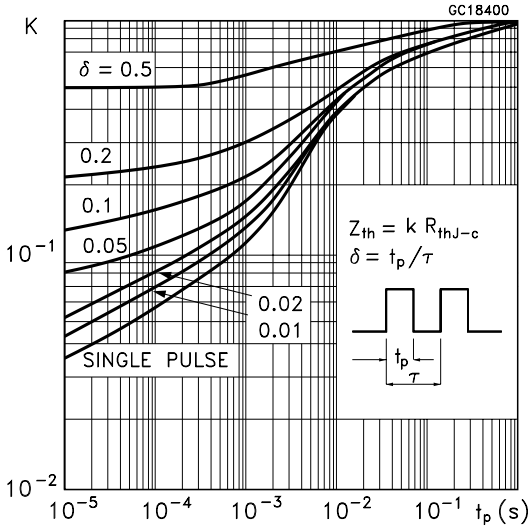

Thermal Impedence for TO-220FP

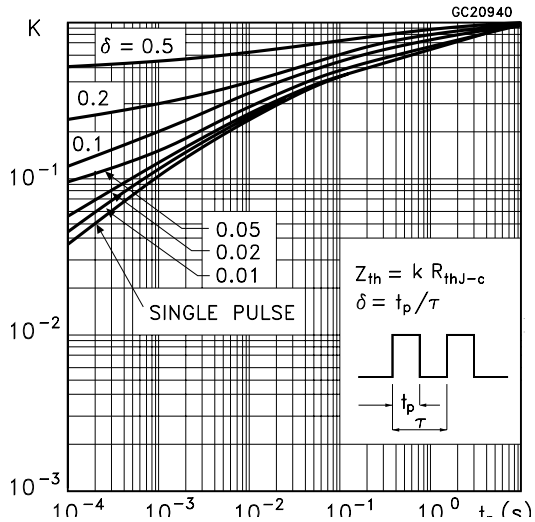

Output Characteristics

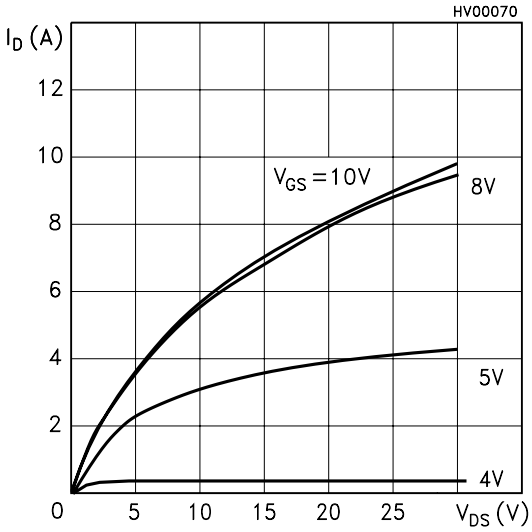

Transfer Characteristics

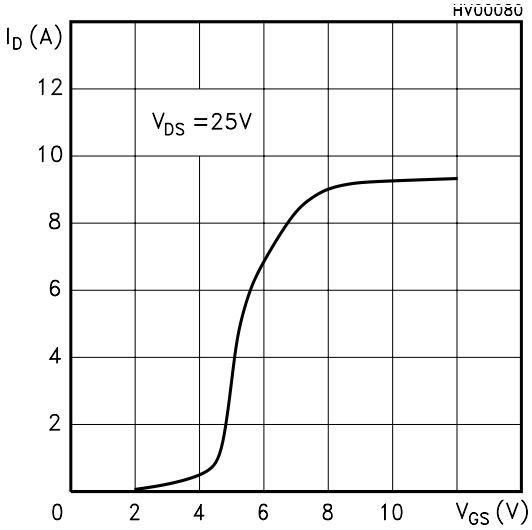

Transconductance

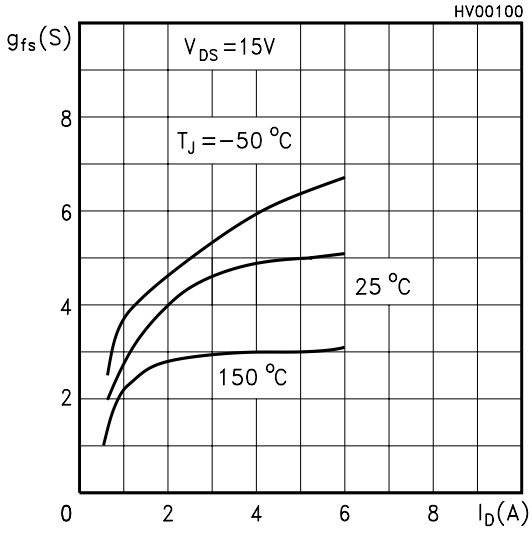

Static Drain-source On Resistance

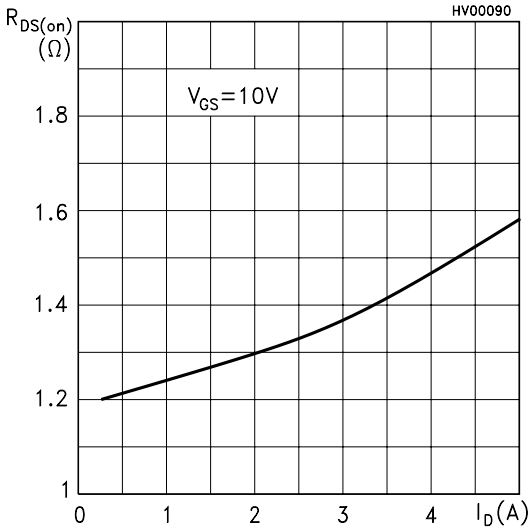

Gate Charge vs Gate-source Voltage

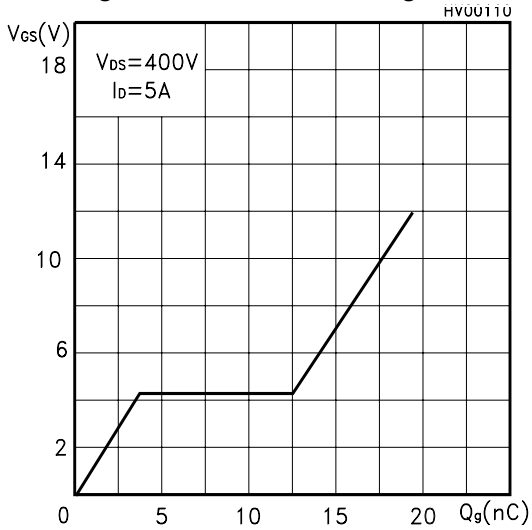

Capacitance Variations

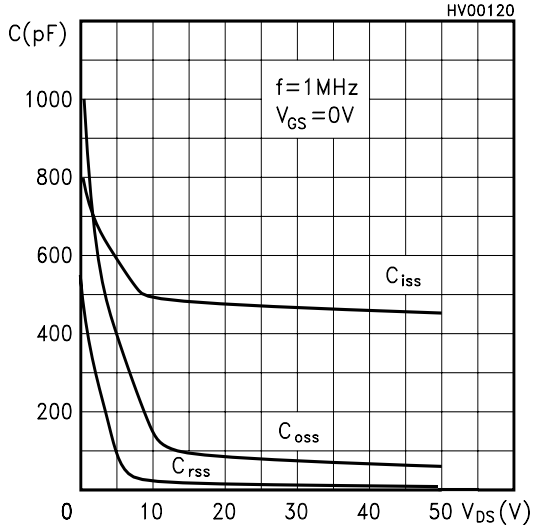

Normalized Gate Threshold Voltage vs Temp.

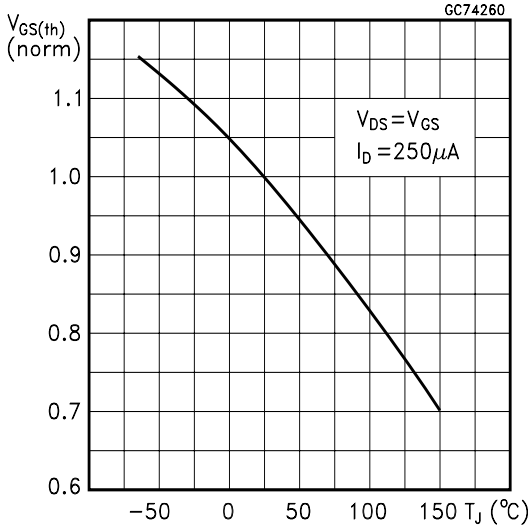

Normalized On Resistance vs Temperature

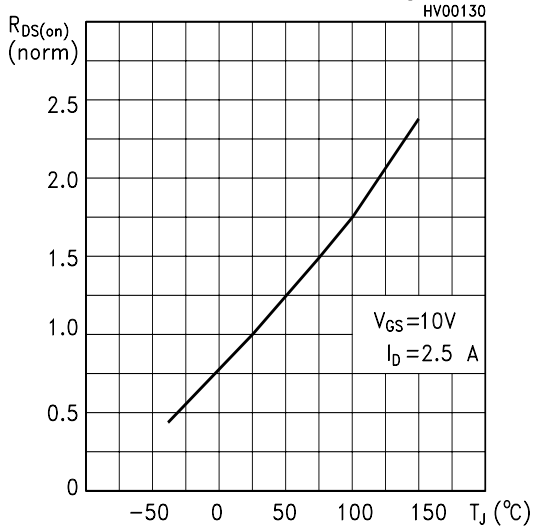

Source-drain Diode Forward Characteristics

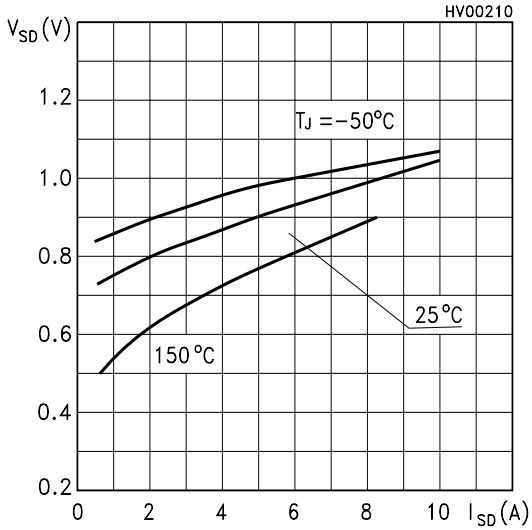

Fig. 1: Unclamped Inductive Load Test Circuit

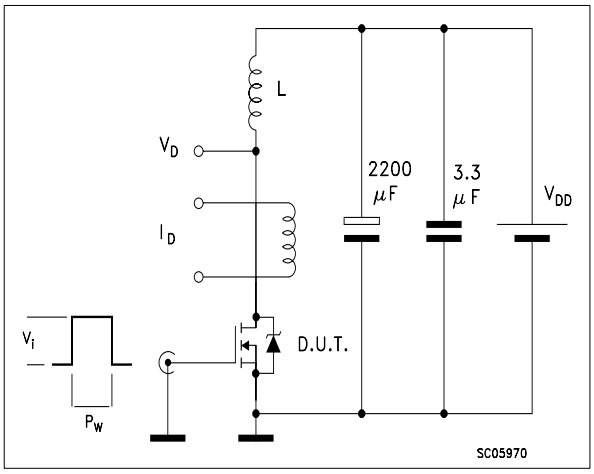

Fig. 2: Unclamped Inductive Waveform

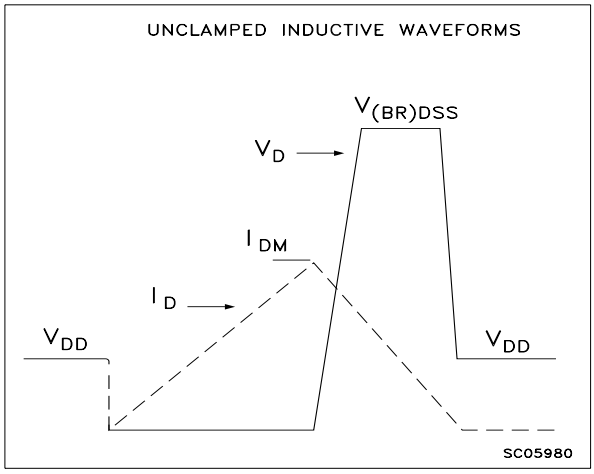

Fig. 3: Switching Times Test Circuit For Resistive Load

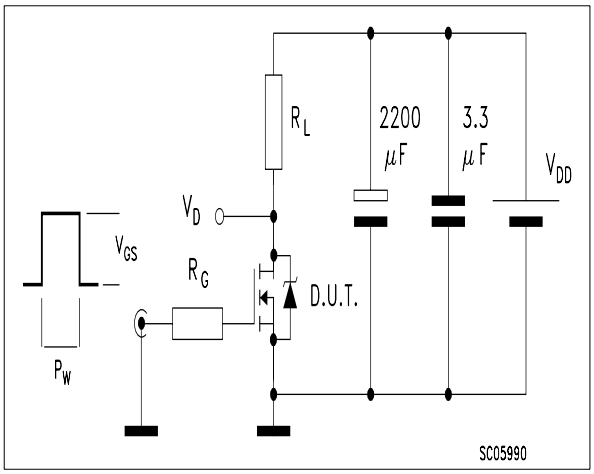

Fig. 4: Gate Charge test Circuit

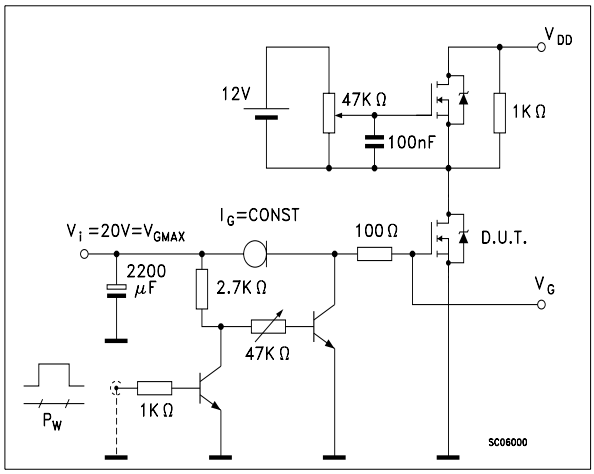

Fig. 5: Test Circuit For Inductive Load Switching And Diode Recovery Times

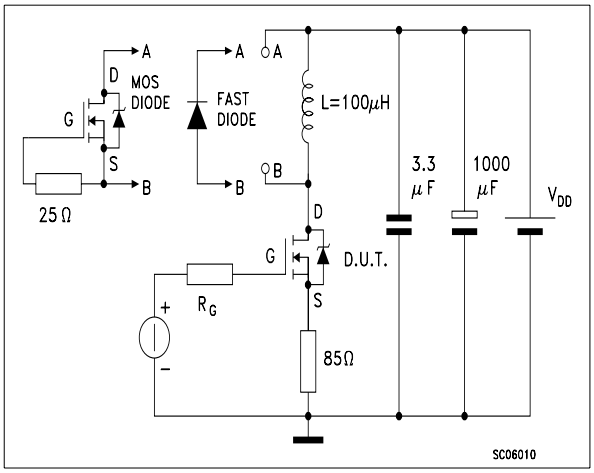

TO-220 MECHANICAL DATA

DIM.	mm			inch		
	MIN.	TYP.	MAX.	MIN.	TYP.	MAX.
A	4.40		4.60	0.173		0.181
C	1.23		1.32	0.048		0.051
D	2.40		2.72	0.094		0.107
D1		1.27			0.050	
E	0.49		0.70	0.019		0.027
F	0.61		0.88	0.024		0.034
F1	1.14		1.70	0.044		0.067
F2	1.14		1.70	0.044		0.067
G	4.95		5.15	0.194		0.203
G1	2.4		2.7	0.094		0.106
H2	10.0		10.40	0.393		0.409
L2		16.4			0.645	
L4	13.0		14.0	0.511		0.551
L5	2.65		2.95	0.104		0.116
L6	15.25		15.75	0.600		0.620
L7	6.2		6.6	0.244		0.260
L9	3.5		3.93	0.137		0.154
DIA.	3.75		3.85	0.147		0.151

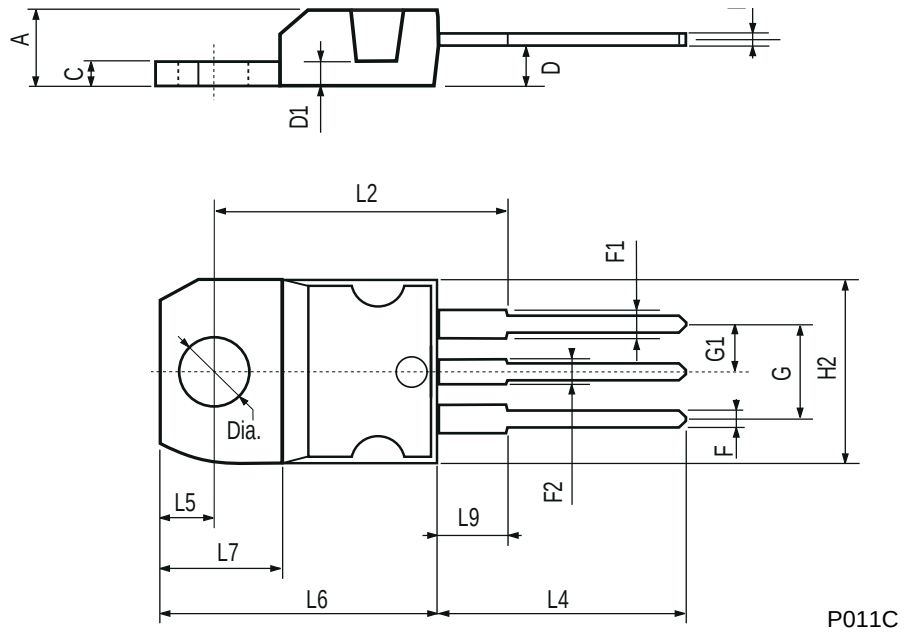

TO-220FP MECHANICAL DATA

DIM.	mm.			inch		
	MIN.	TYP	MAX.	MIN.	TYP.	MAX.
A	4.4		4.6	0.173		0.181
B	2.5		2.7	0.098		0.106
D	2.5		2.75	0.098		0.108
E	0.45		0.7	0.017		0.027
F	0.75		1	0.030		0.039
F1	1.15		1.5	0.045		0.067
F2	1.15		1.5	0.045		0.067
G	4.95		5.2	0.195		0.204
G1	2.4		2.7	0.094		0.106
H	10		10.4	0.393		0.409
L2		16			0.630	
L3	28.6		30.6	1.126		1.204
L4	9.8		10.6	0.385		0.417
L5	2.9		3.6	0.114		0.141
L6	15.9		16.4	0.626		0.645
L7	9		9.3	0.354		0.366
Ø	3		3.2	0.118		0.126

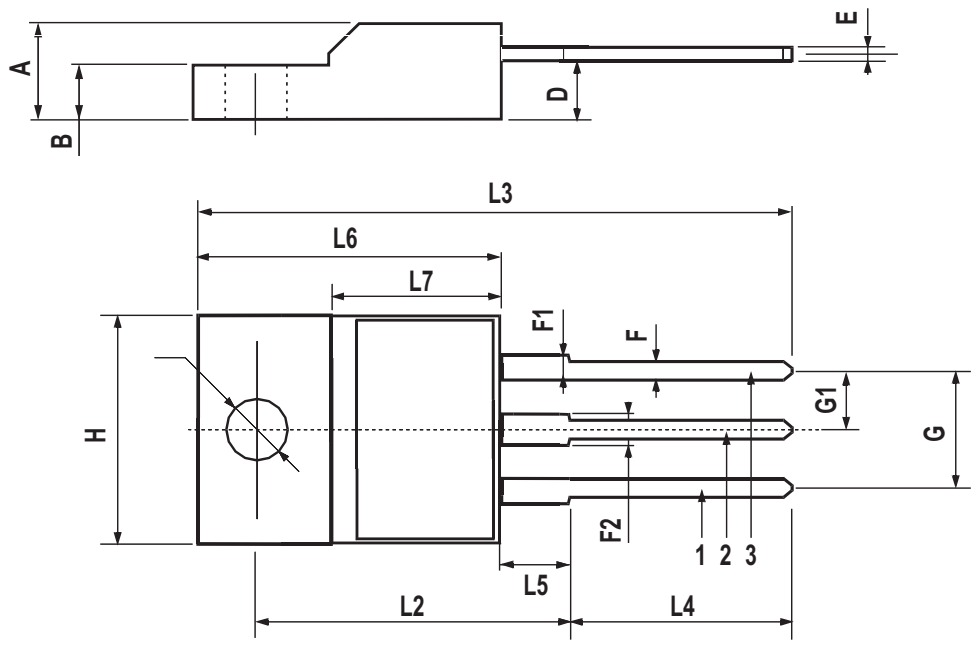

D^2PAK MECHANICAL DATA

DIM.	mm.			inch		
	MIN.	TYP	MAX.	MIN.	TYP.	MAX.
A	4.4		4.6	0.173		0.181
A1	2.49		2.69	0.098		0.106
A2	0.03		0.23	0.001		0.009
B	0.7		0.93	0.027		0.036
B2	1.14		1.7	0.044		0.067
C	0.45		0.6	0.017		0.023
C2	1.23		1.36	0.048		0.053
D	8.95		9.35	0.352		0.368
D1		8			0.315	
E	10		10.4	0.393		
E1		8.5			0.334	
G	4.88		5.28	0.192		0.208
L	15		15.85	0.590		0.625
L2	1.27		1.4	0.050		0.055
L3	1.4		1.75	0.055		0.068
M	2.4		3.2	0.094		0.126
R		0.4			0.015	
V2	0º		8º			

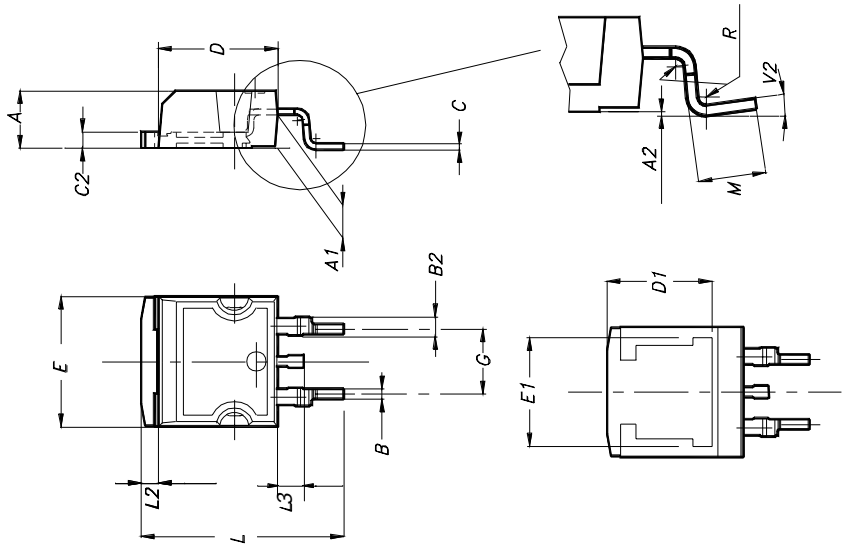

TO-262 (I^2PAK) MECHANICAL DATA

DIM.	mm			inch		
	MIN.	TYP.	MAX.	MIN.	TYP.	MAX.
A	4.4		4.6	0.173		0.181
A1	2.49		2.69	0.098		0.106
B	0.7		0.93	0.027		0.036
B2	1.14		1.7	0.044		0.067
C	0.45		0.6	0.017		0.023
C2	1.23		1.36	0.048		0.053
D	8.95		9.35	0.352		0.368
e	2.4		2.7	0.094		0.106
E	10		10.4	0.393		0.409
L	13.1		13.6	0.515		0.531
L1	3.48		3.78	0.137		0.149
L2	1.27		1.4	0.050		0.055

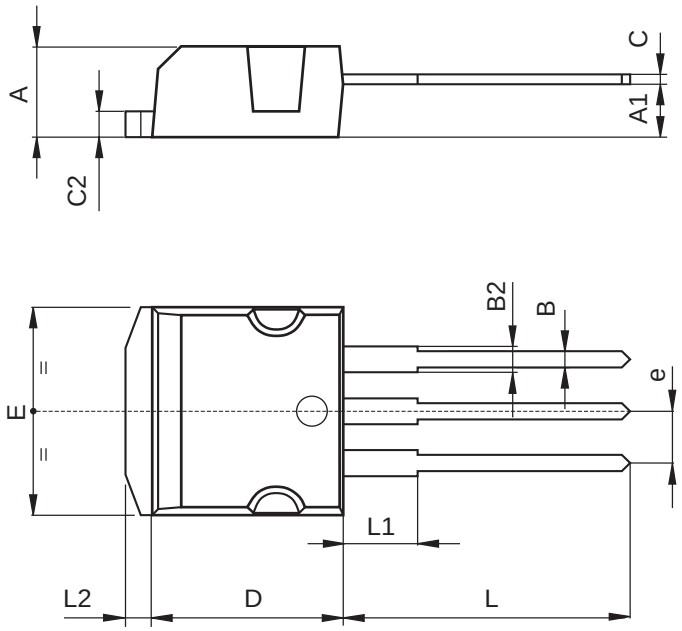

P011P5/E

D²PAK FOOTPRINT

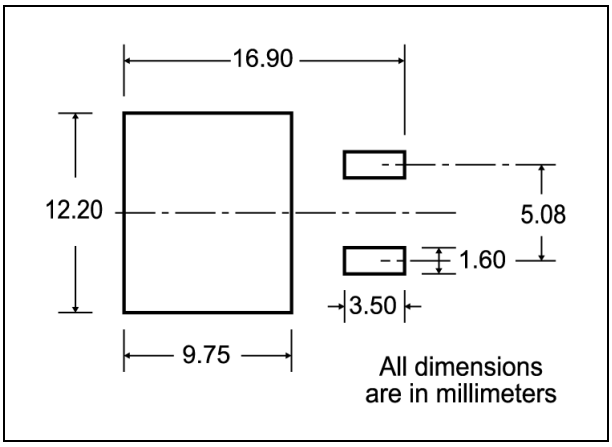

TUBE SHIPMENT (no suffix)*

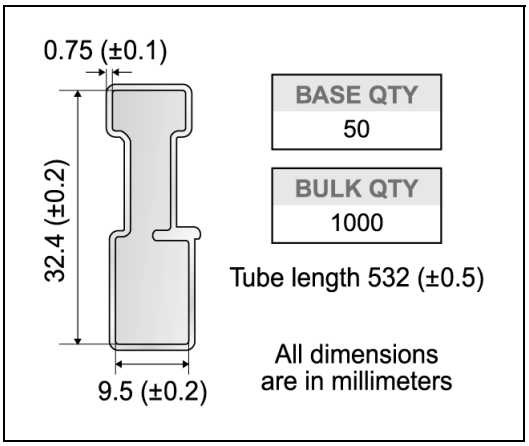

TAPE AND REEL SHIPMENT (suffix "T4")*

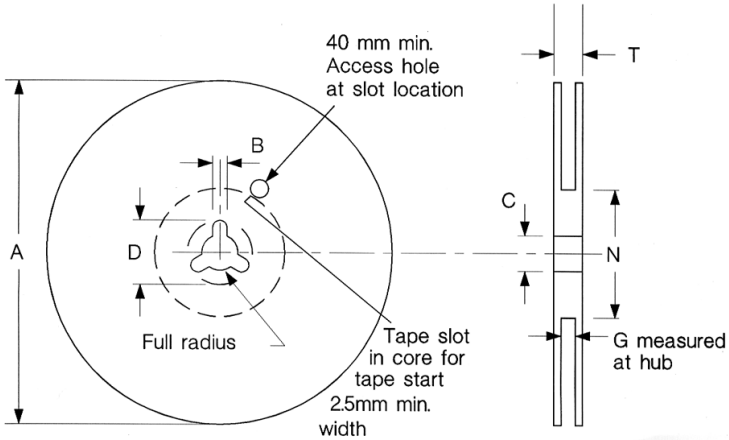

REEL MECHANICAL DATA

DIM.	mm		inch	
	MIN.	MAX.	MIN.	MAX.
A		330		12.992
B	1.5		0.059	
C	12.8	13.2	0.504	0.520
D	20.2		0795	
G	24.4	26.4	0.960	1.039
N	100		3.937	
T		30.4		1.197

BASE QTY	BULK QTY
1000	1000

TAPE MECHANICAL DATA

DIM.	mm		inch	
	MIN.	MAX.	MIN.	MAX.
A0	10.5	10.7	0.413	0.421
B0	15.7	15.9	0.618	0.626
D	1.5	1.6	0.059	0.063
D1	1.59	1.61	0.062	0.063
E	1.65	1.85	0.065	0.073
F	11.4	11.6	0.449	0.456
K0	4.8	5.0	0.189	0.197
P0	3.9	4.1	0.153	0.161
P1	11.9	12.1	0.468	0.476
P2	1.9	2.1	0.075	0.082
R	50		1.574	
T	0.25	0.35	0.0098	0.0137
W	23.7	24.3	0.933	0.956

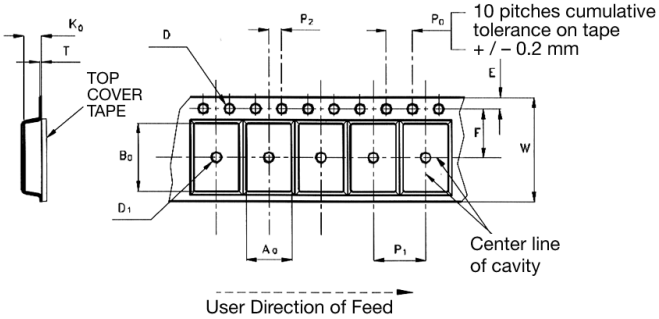

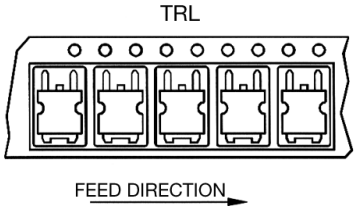

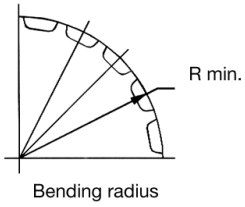

* on sales type

Information furnished is believed to be accurate and reliable. However, STMicroelectronics assumes no responsibility for the consequences of use of such information nor for any infringement of patents or other rights of third parties which may result from its use. No license is granted by implication or otherwise under any patent or patent rights of STMicroelectronics. Specifications mentioned in this publication are subject to change without notice. This publication supersedes and replaces all information previously supplied. STMicroelectronics products are not authorized for use as critical components in life support devices or systems without express written approval of STMicroelectronics.

© The ST logo is a registered trademark of STMicroelectronics

© 2002 STMicroelectronics - Printed in Italy - All Rights Reserved
STMicroelectronics GROUP OF COMPANIES
Australia - Brazil - Canada - China - Finland - France - Germany - Hong Kong - India - Israel - Italy - Japan - Malaysia - Malta - Morocco
Singapore - Spain - Sweden - Switzerland - United Kingdom - United States.
© http://www.st.com