6V/430mW single-channel power amplifier

BA526

The BA526 is a high-output monolithic power amplifier with excellent audio quality. With a 6V power supply, it has a rated output of 430mW into an 8Ω load (THD = 10%), and a maximum output of 700mW. It comes in a compact 9-pin SIP package.

●Applications
Portable radios,
TV sets,
cassette recorders,
interphones,
and wireless tranceivers

●Features
1) High output. P_{OUT} = 430mW (V_{CC} = 6V and an 8Ω load (THD = 10%).
2) Good low voltage characteristics. Begins operating at 2V.
3) Easy-to-mount 9-pin SIP package.
4) Extremely low high-frequency distortion with small signals. Uses soft clipping for good audio quality.
5) Power-on "pop" noise is suppressed.
6) Low noise.

●Block diagram

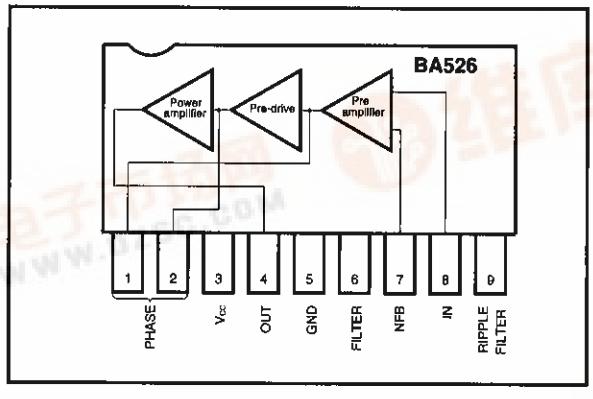

●Internal circuit diagram

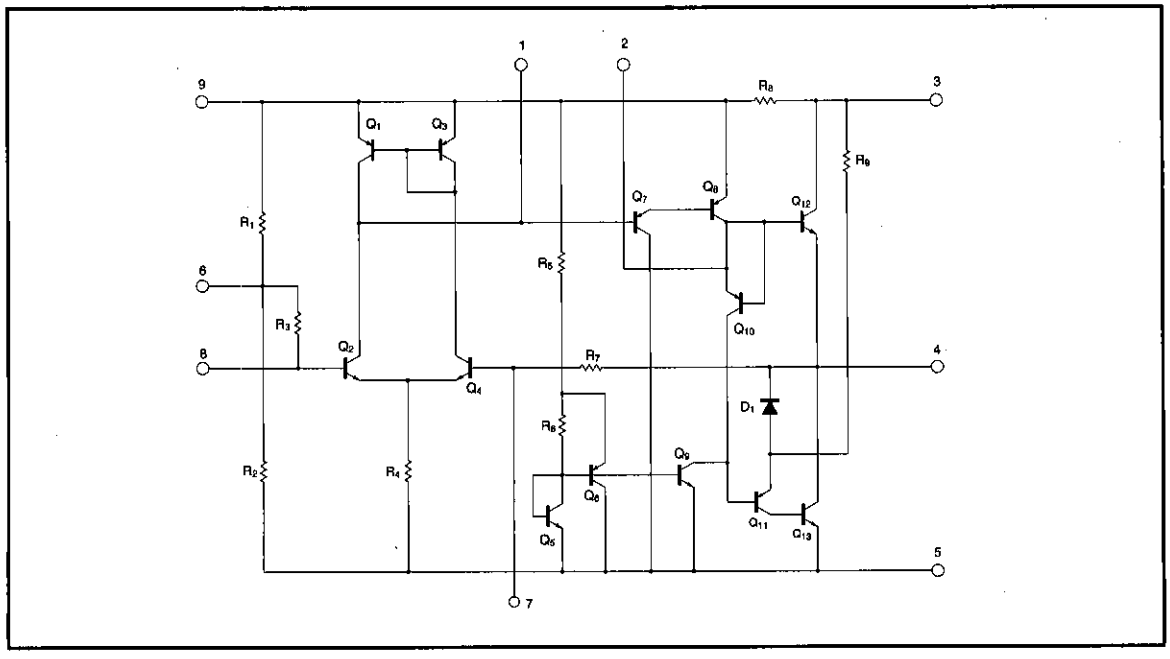

●Absolute maximum ratings (Ta = 25℃)

Parameter	Symbol	Limits	Unit
Supply voltage	V_{CC}	9	V
Power dissipation	Pd	950*	mW
Operating temperature	Topr	−10~65	℃
Storage temperature	Tstg	−30~125	℃

* Reduced by 9.5mW for each increase in Ta of 1°C over 25°C.

●Electrical characteristics (unless otherwise specified Ta = 25℃, V_{CC} = 6V, R_L = 8Ω and f= 1kHz)

Parameter	Symbol	Min.	Typ.	Max.	Unit	Condition	Measurement Circuit
Quiescent circuit current	I_Q	—	12	24	mA	V_{IN}=0V_{rms}	Fig.1
Closed-circuit voltage gain	G_{VC}	48	52	54	dB	R_{NF}=47Ω、V_{IN}=2.5mV_{rms}	Fig.1
Maximum output power	P_{OM}	600	700	—	mW	V_{IN}=25mV_{rms}	Fig.1
Rated output power	P_{OUT}	350	430	—	mW	THD=10%	Fig.1
Output noise voltage	V_{NO}	—	0.25	0.7	mV_{rms}	R_g=0Ω	Fig.1
Total harmonic distortion	THD	—	0.4	2	%	P_O=50mW	Fig.1
Input resistance	R_{IN}	—	22	—	kΩ	P_O=50mW	Fig.1

●Measurement circuit

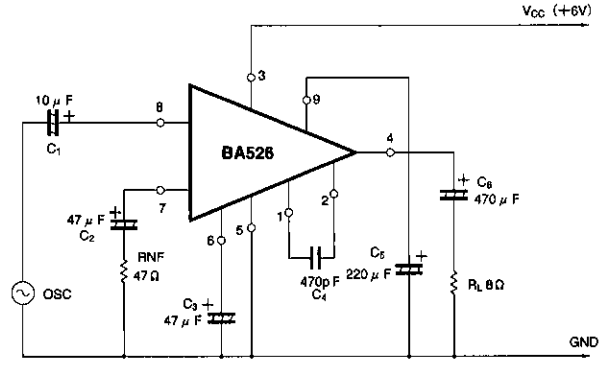

Fig. 1

●Application example

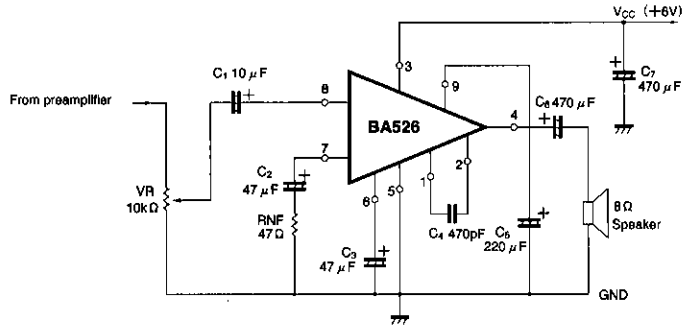

Fig. 2

●External dimensions (Unit: mm)