查询BA5944FP供应商 捷多邦，专业PCB打样工厂，24小时加急出货

BTL Driver IC for CD-ROM
BA5944FP

●Description

The BA5944FP is a BTL driver IC (actuator operation) developed for CD-ROMs. Two highly accurate 3.6V regulators and a 4.2V reset circuit that acts as a peripheral power supply are included, as well as two general purpose comparators. An achievement in space savings of the set and reducing components has been realized by integrating regulators and drivers into an actuator driver IC as one chip.

●Dimension (Units:mm)

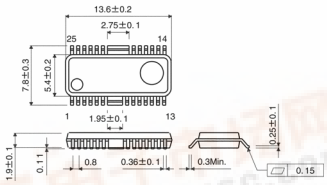

HSOP25

●Features

1) 2-channel dynamic range actuator driver built-in
2) Highly accurate (+/−2%) 3.6V regulator 2-channel built-in (1-channel regulator can be controlled with On/Off switch.)
3) Highly accurate (+/−2%) 4.2V reset curcuit built-in
4) Includes two general purpose comparators.

●Applications

Slim CD-ROM, etc.

●Absolute Maximum Ratings(Ta=25˚C)

Parameter	Symbol	Limits	Unit
Supply voltage	V_{CC}	13.5	V
Power dissipation	Pd	1.45*	W
Operating temperature range	Topr	-35 ~ +85	˚C
Storage temperature range	Tstg	-55 ~ +150	˚C

*Derating:11.6mW/˚C for operation above Ta=25˚C.

●Recommended Operating Conditions(Ta=25˚C)

Parameter	Symbol	Min.	Typ.	Max.	Unit
V_{CC} for Pre-block	$PreV_{CC}$	4.5	—	13.2	V
V_{CC} for Power-block	$PowV_{CC}$	4.5	—	Pre Vcc	V
V_{CC} for Regulator-block	$REGV_{CC}$	4.5	—	Pre Vcc	V

找PDF 维库一下 pdf.dzsc.com

●Electrical Characteristics (Unless otherwise noted, Pre/Pow/Reg, Vcc=5V, BIAS=1.65V, RL=8Ω)

Parameter	Symbol	Min.	Typ.	Max.	Unit	Conditions
Quiescent current	Icc	—	10.0	15.0	mA	No load
<DRIVER>						
Output offset voltage	Voo	−50.0	0.0	50.0	mV	
Output amplitude 1	VOM1	3.2	3.6	—	V	
Output amplitude 2	VOM2	3.7	4.1	—	V	Pre Vcc=12V, Pow Vcc=5V
Gain (close circuit)	Gvc	10.0	11.5	13.0	dB	Vin=BIAS −0.5V
<REGULATOR>						
Peak output current	IoMax	200	—	—	mA	
Output voltage	VREG	3.525	3.60	3.675	V	IL=100mA
Load regulation	△V RL	—	20	50	mV	IL=0~200mA
Line regulation	△V Vcc	—	3	10	mV	Vcc=4.5~13.2V
<COMPARATOR>						
Input offset voltage	Vio	− 4.0	—	4.0	mV	
Common mode input voltage range	VICM	0.0	—	Vcc -1.6	V	
<RESET>						
Reset ON voltage	VRSTON	4.12	4.20	4.28	V	RESET IN=High−>Low
Hysteresis bound	VRSTHY	40	60	90	mV	

＊This product is not designed for protection against radioactive rays.
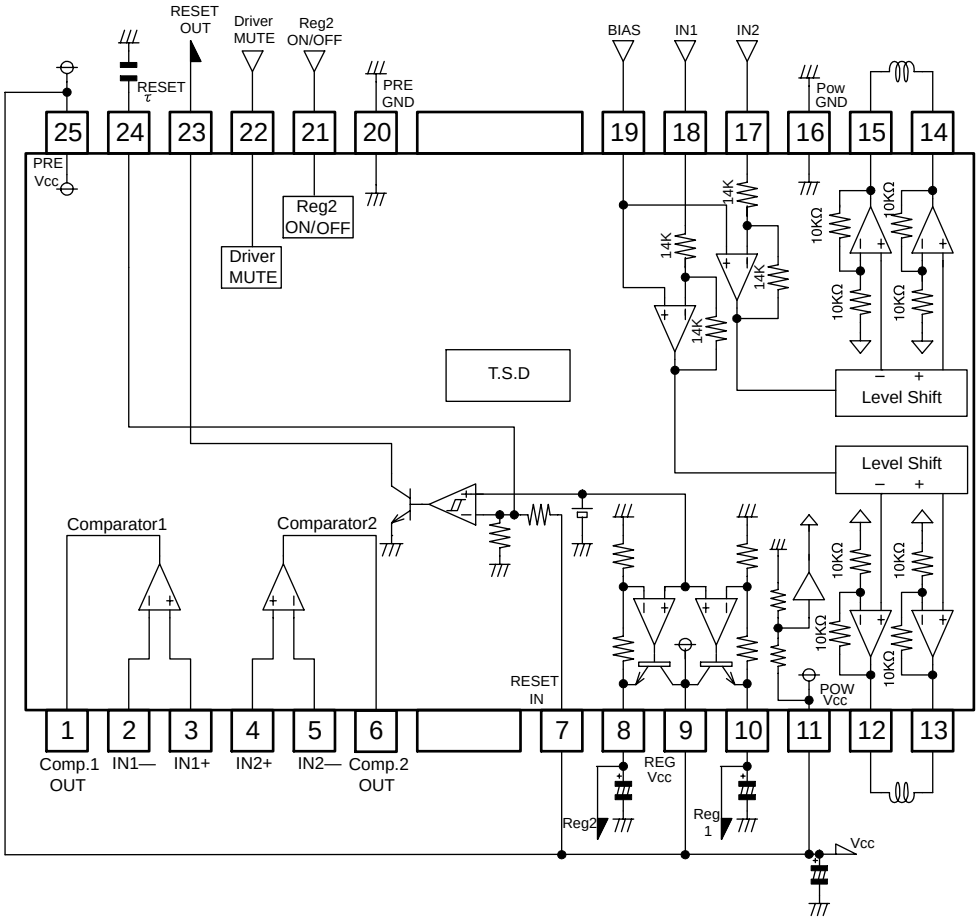
●Application circuit