查询BA597供应商 捷多邦，专业PCB打样工厂，24小时加急出货

SIEMENS

## Silicon PIN Diode

## BA 597

### Preliminary Data

- RF switch, RF attenuator for frequencies above 10 MHz
- Very low IM distortion

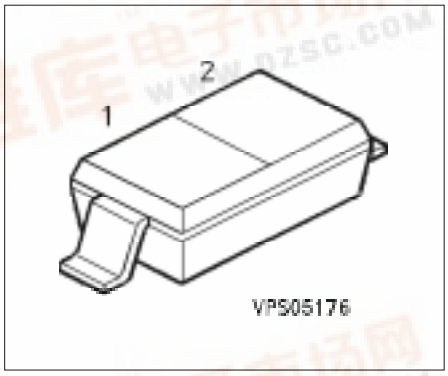


| Type | Ordering Code (taped) | Pin Configuration 1 | | 2 | Marking | Package |
|---|---|---|---|---|---|---|
| BA 597 | UPON INQUIRY | C | | A | yellow/R | SOD-323 |

### Maximum Ratings

| Parameter | Symbol | Values | Unit |
|---|---|---|---|
| Reverse voltage | $V_R$ | 50 | V |
| Forward current | $I_F$ | 100 | mA |
| Total power dissipation $T_S \leq 40$ °C[1)] | $P_{tot}$ | 250 | mW |
| Junction temperature | $T_j$ | 150 | °C |
| Storage temperature range | $T_{stg}$ | – 55 … + 150 | °C |

1) Package mounted on aluminum 15 mm x 16.7 mm x 0.7 mm.

找PDF 维库 pdf.dzsc.com

**Characteristics per Diode**
at $T_A$ = 25 °C, unless otherwise specified.

| Parameter | Symbol | Value | | | Unit |
|---|---|---|---|---|---|
| | | min. | typ. | max. | |
| Reverse current<br>$V_R$ = 30 V | $I_R$ | –<br>– | –<br>– | 20<br>– | nA |
| Forward voltage<br>$I_F$ = 100 mA | $V_F$ | –<br>– | 0.9<br>– | –<br>– | V |
| Diode capacitance<br>$V_R$ = 10 V, $f$ = 1 MHz<br>$V_R$ = 0 V, $f$ = 100 MHz | $C_T$ | –<br>– | 0.52<br>0.27 | –<br>– | pF |
| Forward resistance<br>$I_F$ = 1.5 mA, $f$ = 100 MHz<br>$I_F$ = 10 mA, $f$ = 100 MHz | $r_f$ | –<br>– | 22<br>4.2 | –<br>– | Ω |
| Charge carrier lifetime<br>$I_F$ = 10 mA, $I_R$ = 6 mA, $I_R$ = 3 mA | $\tau_L$ | – | 2.5 | – | µs |

**Diode capacitance** $C_T = f(V_R)$
$f$ = 1 MHz, 100 MHz

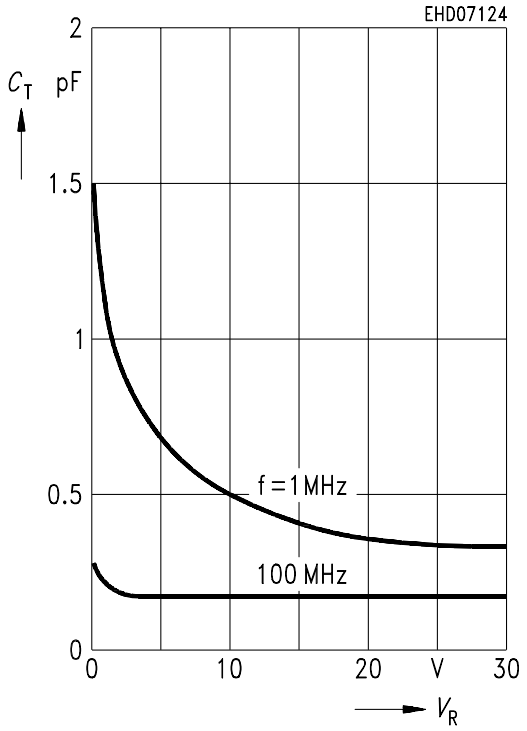


**Forward resistance** $r_t = (I_F)$, $f$ = 100 MHz

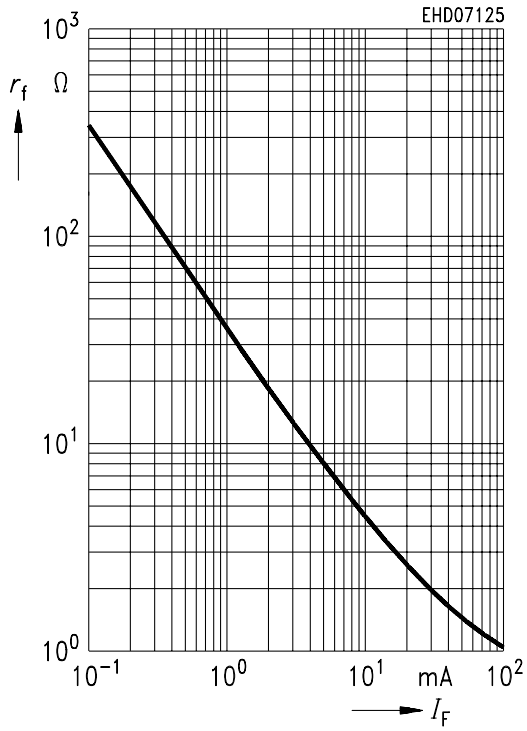

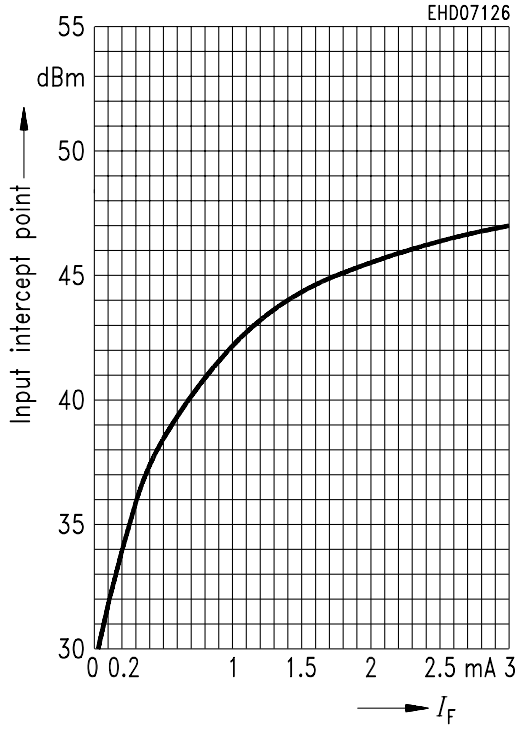
**3rd Harmonic intercept point vs forward current** $f$ = 100 MHz