# LED level meter driver, 5-point, VU scale

## BA6154

The BA6154 is a driver IC for LED VU level meters in stereo equipment and other display applications.
The IC displays the input level (range：−10dB to +6dB) on a 5-point, bar-type LED display.
The BA6137 includes a rectifier amplifier allowing direct AC input, and has constant-current outputs, so it can directly drive the LEDs without variations in LED current due to supply voltage fluctuations.



●Applications
VU meters, signal meters, and other display devices.

●Features
1) Rectifier amplifier allows either AC or DC input.
2) Rectifier amplifier has high gain (26dB), so operation at low input level is possible.
3) Constant-current outputs for constant LED current when the supply voltage fluctuates.
4) Built-in reference voltage means that power supply voltage fluctuations do not effect the display.
5) Wide operating voltage range (3.5V to 16V) for a wide range of applications.
6) Low PCB space requirements. Comes in a compact 9-pin SIP package and requires few external components.

●Block diagram

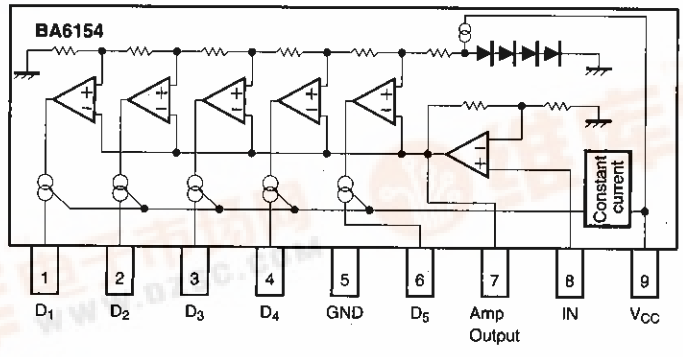

●Absolute maximum ratings (Ta = 25℃)

| Parameter | Symbol | Limits | Unit |
|---|---|---|---|
| Supply voltage | $V_{CC}$ | 18 | V |
| Power dissipation | Pd | 800* | mW |
| Operating temperature | Topr | −25~60 | ℃ |
| Storage temperature | Tstg | −55~125 | ℃ |
| Junction temperature | Tj | 150 | ℃ |

* Reduced by 6.4mW for each increase in Ta of 1°C over 25°C.

●Electrical characteristics (unless otherwise specified Ta = 25℃, $V_{CC}$ = 6.0V, and $V_f$ = 1kHz)

| Parameter | Symbol | Min. | Typ. | Max. | Unit | Conditions | Measurement Circuit |
|---|---|---|---|---|---|---|---|
| Operating voltage range | $V_{CC}$ | 3.5 | 6 | 16 | V | − | Fig.1 |
| Quiescent current | $I_Q$ | − | 5 | 8 | mA | $V_{IN}$=0V | Fig.1 |
| Control level 1 | $V_{C1}$ | −13 | −10 | −7 | dB | − | Fig.1 |
| Control level 2 | $V_{C2}$ | −6.5 | −5 | −3.5 | dB | − | Fig.1 |
| Control level 3 | $V_{C3}$ | − | 0 | − | dB | Adjustment point | Fig.1 |
| Control level 4 | $V_{C4}$ | 2.5 | 3 | 3.5 | dB | − | Fig.1 |
| Control level 5 | $V_{C5}$ | 5 | 6 | 7 | dB | − | Fig.1 |
| Sensitivity | $V_{IN}$ | 36 | 45 | 54 | $mV_{rms}$ | $V_{C3}$ on level | Fig.1 |
| LED current | $I_{LED}$ | 11 | 15 | 18.5 | mA | − | Fig.1 |
| Input bias current | $I_{INO}$ | − | 0.3 | 1.0 | μA | − | Fig.1 |

●Measurement circuit

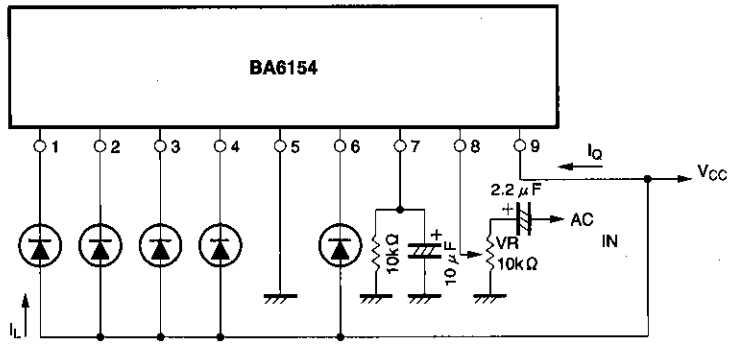


Fig. 1

●Application example

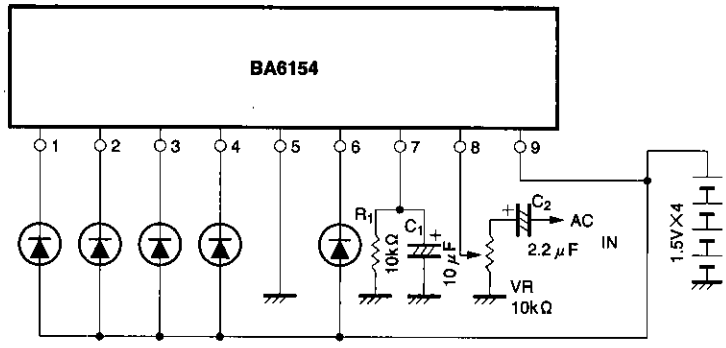


Fig. 2

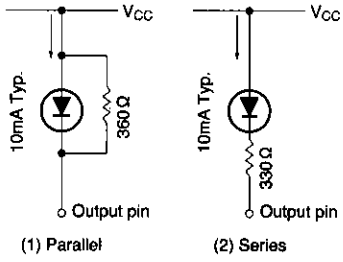


Fig. 3

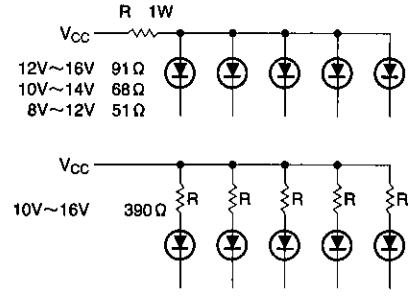


Fig. 4

The response time (attack and release time) can be changed by varying the values of $C_1$ and $C_2$.
$C_2$ is a coupling capacitor, and the potentiometer VR varies the input level. Input a fixed voltage level and adjust the potentiometer so that the LED lights at 0dB. To reduce the LED current, connect a resistor either in parallel (Fig. 3 (1)) or in series (Fig. 3 (2)) with the LED.

If a resister is connected in series with the LED, the LED current will change if the supply voltage fluctuates.

Note: If the power supply voltage exceeds 9V, insert a resistor in series with the LED current supply line, or connect a heat sink so that the maximum power dissipation Pd Max. is not exceeded (see Fig. 4).

●External dimensions (Unit: mm)

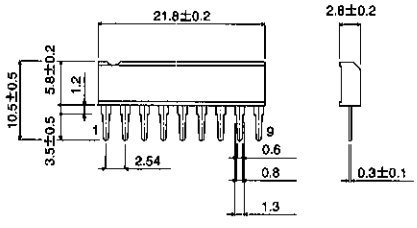


SIP9