查询BA6222供应商 捷多邦，专业PCB打样工厂，24小时加急出货

Reversible motor driver

BA6222

The BA6222 is a reversible-motor driver with a maximum output current of 2.2A. Two logic inputs allow four output modes: forward, reverse, idling, and braking. The motor revolving speed can be set arbitrarily by controlling the voltage applied to the motor.

●Applications
VCRs

●Features
1) Large output current. ($I_{OMax.}$ = 2.2A)
2) Built-in thermal shutdown circuit.
3) Output voltage can be adjusted arbitrarily with the output voltage setting pin. Because the pin has a gain of 11.4dB, a high output voltage can be set with a low input voltage.
4) Small standby circuit current.

●Block diagram

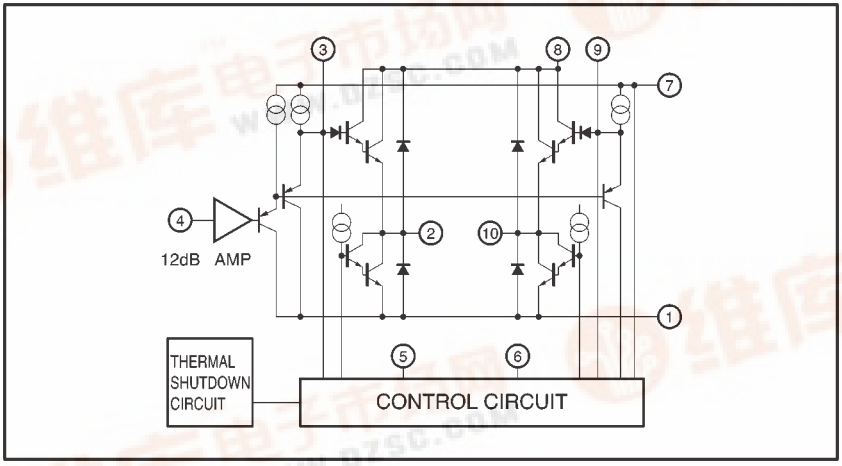

●Equivalent circuit for pins 5 and 6

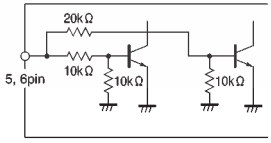

Fig.1

找PDF 维库一下 pdf.dzsc.com

●Input / output truth table

5pin（IN）	6pin（IN）	2pin（OUT）	10pin（OUT）
L	L	OPEN	OPEN
H	L	H	L
L	H	L	H
H	H	L	L

Note: HIGH level input is 3.0 V or more
LOW level input is 1.0 V or less

●Absolute maximum ratings (Ta = 25°C)

Parameter	Symbol	Limits	Unit
Power supply voltage	V_{CC1}, V_{CC2}	24	V
Power dissipation	Pd	2000*1	mW
Operating temperature	Topr	−20～+75	℃
Storage temperature	Tstg	−50～+125	℃
Output current	I_O	2.2*2	A
Input voltage	V_{IN}	−0.3～V_{CC1}+0.3	V

*1 Reduced by 20 mW for each increase in Ta of 1℃ over 25 ℃.
*2 500 μs pulse with a duty ratio of 1%.

●Electrical characteristics (unless otherwise noted, Ta = 25°C, V_{CC} = 12V)

Parameter	Symbol	Min.	Typ.	Max.	Unit	Conditions
Operating voltage	V_{CC}, V_{CC2}	8	—	18	V	
Current dissipation 1	I_{CC1}	—	1.2	2.5	mA	pin5, pin6；“L”，pin4=0V
Current dissipation 2	I_{CC2}	—	16	35	mA	Either pin 5 or 6 is HIGH, the other is LOW; pin 4 = 0 V
Current dissipation 3	I_{CC3}	—	25	60	mA	pin5, pin6; “H”，pin4=0V
Input threshold voltage of pins 5 and 6	V_{TH5}, V_{TH6}	1.0	2.0	3.0	V	LOW level = 1 V, HIGH level = 3 V
Output high level voltage of pin 2	V_{H2}	9.5	—	—	V	I_O=0.1A, pin4=5V
Output low level voltage of pin 2	V_{L2}	—	—	0.5	V	I_O=0.1A, pin4=5V
Output high level voltage of pin 10	V_{H10}	9.5	—	—	V	I_O=0.1A, pin4=5V
Output low level voltage of pin 10	V_{L10}	—	—	0.5	V	I_O=0.1A, pin4=5V
Bias current of pin 4	I_{b4}	—	1.2	5.0	μA	pin4=1.0V
Output gain of pin 4	G_V	10.35	11.35	12.35	dB	pin4→pin2（10），I_O=100mA*
Output leakage current	I_{OL}	—	—	1	mA	pin5, pin6; “L”

* V_{OUT1} is the difference between the HIGH and LOW level output voltages when pin 4 = 1 V.
V_{OUT2} is the difference between the HIGH and LOW level output voltages when pin 4 = 2 V.

$$G_V = 20 \log \left[\frac{V_{OUT2} - V_{OUT1}}{2V - 1V} \right]$$

V_{OUT1} and V_{OUT2} are the values at which a stable output is obtained with no heat sink.

●Application example

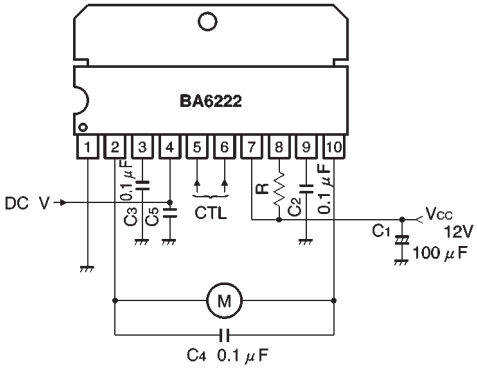

Fig.2

●Operation notes

(1) Output voltage control pin (pin 4)

The voltage at pin 4 is related to the HIGH output voltage (V_{OH}) as follows :

$$V_{OH} = 4 \times V_4 + V_{ofs}$$

where V_{ofs} is the error voltage, which varies with the output current and the chip temperature. The output voltage is about four times the voltage at pin 4.

The V_4-value can be classified into three ranges according to the output state :

A : V_{OH} is at or near 0V

B : V_{OH} is four times the gain

C : V_{OH}-value is saturated

An oscillation may occur if a circuit having an output impedance of more than a few hundred ohms is connected to pin 4. In this case, connect a capacitor of at least 3300pF between pin 4 and GND.

(2) Thermal shutdown circuit

The thermal shutdown circuit turns off the driver output if the chip temperature rises to about 150°C. The shutdown signal is not latched.

(3) Make sure that pin voltages will not exceed the supply voltage by more than 0.3V or will not become less than the GND pin voltage by more than 0.3V.

(4) The quality of these products have been carefully checked; however, use of the products with applied voltages, operating temperatures, or other parameters that exceed the absolute maximum rating given may result in the damage of the IC and the product it is used in. If the IC is damaged, the short mode and open modes cannot be specified, so if the IC is to be used in applications where parameters may exceed the absolute maximum ratings, then be sure to incorporate fuses, or other physical safety measures.

(5) Input pins

Voltage should never be applied to the input pins when the V_{CC} voltage is not applied to the IC. Similarly, when V_{CC} is applied, the voltage on each input pin should be less than V_{CC} and within the guaranteed range for the electrical characteristics.

(6) Back-rush voltage

Depending on the ambient conditions, environment, or motor characteristics, the back-rush voltage may fluctuate. Be sure to confirm that the back-rush voltage will not adversely affect the operation of the IC.

(7) Large current line

Large currents are carried by the motor power supply and motor ground for these ICs.

Therefore, the layout of the pattern of the PC board and the constants of certain parameters for external components, such as the capacitor between the power supply and ground, may cause this large output current to flow back to the input pins, resulting in output oscillation or other malfunctions. To prevent this, make sure that the PC board layout and external circuit constants cause no problems with the characteristics of these ICs.

(8) Power dissipation

The power dissipation will fluctuate depending on the mounting conditions of the IC and the ambient environment. Make sure to carefully check the thermal design of the application where these ICs will be used.

(9) Power consumption

The power consumption by the IC varies widely with the power supply voltage and the output current. Give full consideration to the power dissipation rating and the thermal resistance data and transient thermal resistance data, to provide a thermal design so that none of the ratings for the IC are exceeded.

(10) ASO

Make sure that the output current and supply voltage do not exceed the ASO values.

(11) Precautions for input mode switching

To ensure reliability, it is recommended that the mode switching for the motor pass once through the open mode.

(12) In-rush current

There are no circuits built into these ICs that prevent in-rush currents. Therefore, it is recommended to place a current limiting resistor or other physical countermeasure.

(13) Factors regarding the thermal, power supply, and motor conditions

If the potential of the output pin sways greatly and goes below the potential of ground, the operation of the IC may malfunction or be adversely affected. In such a case, place a diode between the output and ground, or other measure, to prevent this.

C_1 : Power supply filter capacitor. Place as near as possible to pin 1.

C_2, C_3 : Capacitors to prevent both output transistors being turned on at the same time.

C_4 : Surge voltage absorbing capacitor

C_5 : Oscillation preventing capacitor. An oscillation may occur if a circuit having an output impedance of more than a few hundred ohms is connected to pin 4. In this case, connect a capacitor of at least 3300pF.

R : Resistor used for reducing collector loss and limiting the short-circuit current. A resistance range of 4.7 ~ 10Ω is recommended.

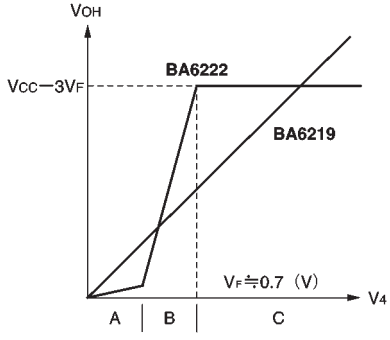

Fig.3

●Electrical characteristic curves

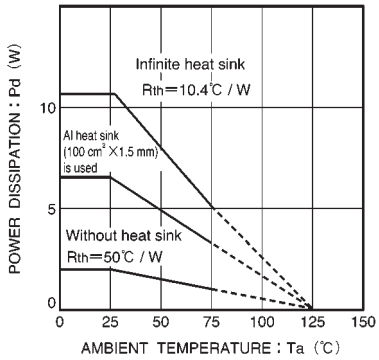

Fig.4 Thermal derating

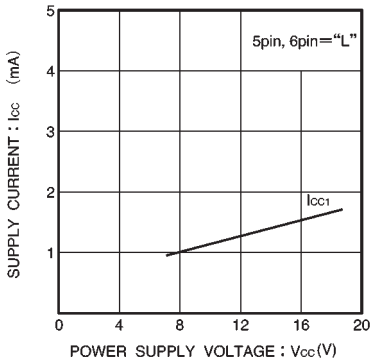

Fig.5 Supply current 1 vs. power supply voltage

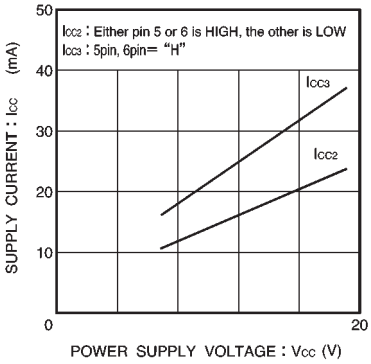

Fig.6 Circuit voltage 2, 3 vs. power supply voltage

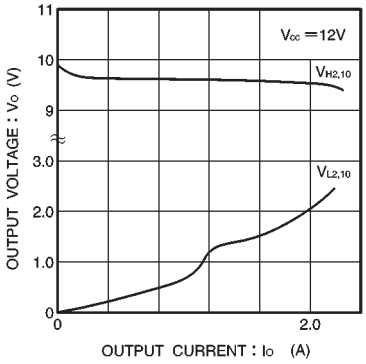

Fig.7 "H" and "L" level voltage vs. output current

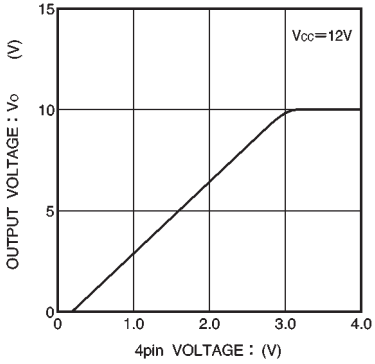

Fig.8 Output voltage vs. 4 pin voltage

●External dimensions (Units: mm)

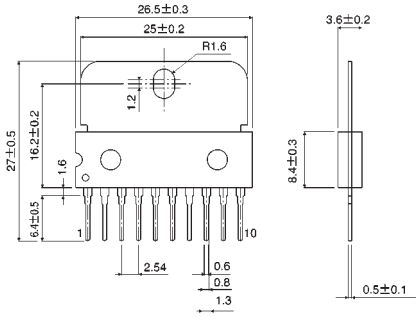

HSIP10