查询BA7649供应商 捷多邦，专业PCB打样工厂，24小时加急出货

Video signal switcher

BA7649A / BA7649AF

The BA7649A and BA7649AF are five-channel analog multiplexers (the IN5 pin can be used a mute input) designed for use in video cassette recorders. They feature large dynamic range, and wide operating frequency range, and have sync-tip inputs which are ideal for switching video signals.

●Applications

Video cassette recorders and televisions

●Features

1) 5-input / 1-output switches.
2) Built-in mute (the IN5 pin can be use a mute input).
3) Sync-tip clamp inputs.
4) Wide operating supply voltage range (4.5V to 13.0V).
5) Low power consumption (48mW Typ.).
6) Excellent frequency characteristics (10MHz, 0dB Typ.).
7) Wide dynamic range (3.5V_{P-P} Typ.).
8) Low interchannel crosstalk (– 65dB Typ., f = 4.43MHz).
9) DIP / SOP 14 pin package.

●Absolute maximum ratings (Ta = 25°C)

BA7649A

Parameter	Symbol	Limits	Unit
Power supply voltage	V_{CC}	13.5	V
Allowable current	Pd	1100*	mW
Operating temperature	Topr	– 25 ~ + 75	°C
Storage temperature	Tstg	– 55 ~ + 125	°C

* Reduced by 11.0mW for each increase in Ta of 1°C over 25°C.

BA7649AF

Parameter	Symbol	Limits	Unit
Power supply voltage	V_{CC}	13.5	V
Allowable current	Pd	450*	mW
Operating temperature	Topr	– 25 ~ + 75	°C
Storage temperature	Tstg	– 55 ~ + 125	°C

* Reduced by 4.5mW for each increase in Ta of 1°C over 25°C when mounted on a 50mm × 50mm PCB board.

找PDF 维库一下 pdf.dzsc.com

●Block diagram

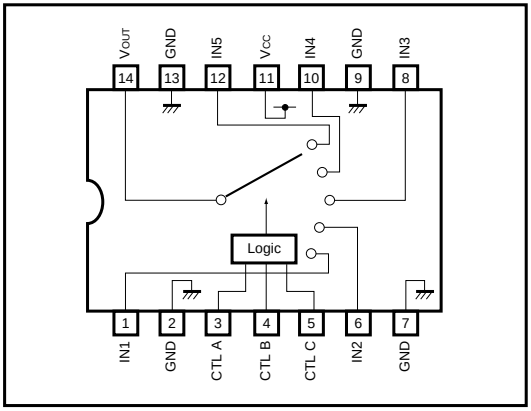

●Truth table

CTLA	CTLB	CTLC	OUT
L (OPEN)	L (OPEN)	L (OPEN)	IN1
L (OPEN)	H	L (OPEN)	IN2
H	L (OPEN)	L (OPEN)	IN3
H	H	L (OPEN)	IN4
*	*	H	MUTE (IN5)

* Either "L (open)" or "H".

●Equivalent circuits

CLAMP INPUT

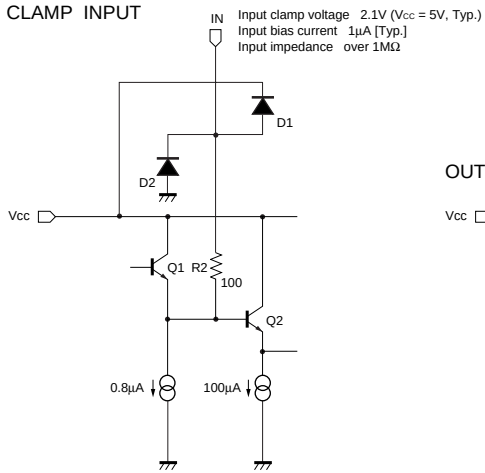

OUTPUT

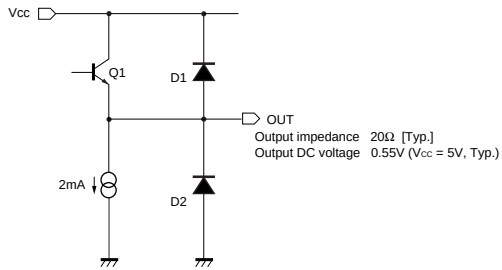

CTLA / CTLB

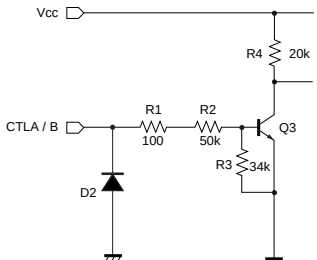

CTLC

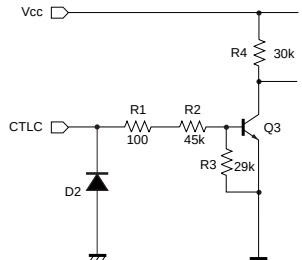

●Electrical characteristics (unless otherwise noted, Ta = 25°C and V_{CC} = 5V)

Parameter	Symbol	Min.	Typ.	Max.	Unit	Conditions
Operating voltage	V_{CC}	4.5	—	13.0	V	—
Supply current	I_{CC}	—	9.5	14.5	mA	—
Maximum output level	V_{om}	3.0	3.5	—	V_{P-P}	f = 1kHz, THD = 0.5%
Voltage gain	G_V	– 0.5	0	0.5	dB	f = 1MHz, V_{IN} = 1.0V_{P-P}
Interchannel crosstalk	C_T	—	– 65	—	dB	f = 4.43MHz, V_{IN} = 1.0V_{P-P}
Frequency characteristics	G_f	– 3.0	0	1.0	dB	f = 10MHz / 1MHz, V_{IN} = 1.0V_{P-P}
CTL pin switching level A	V_{TH-A}	1.0	2.0	3.0	V	—
CTL pin switching level B	V_{TH-B}	1.0	2.0	3.0	V	—
CTL pin switching level C	V_{TH-C}	1.0	2.0	3.0	V	—

○Not designed for radiation resistance.

●Measurement circuit

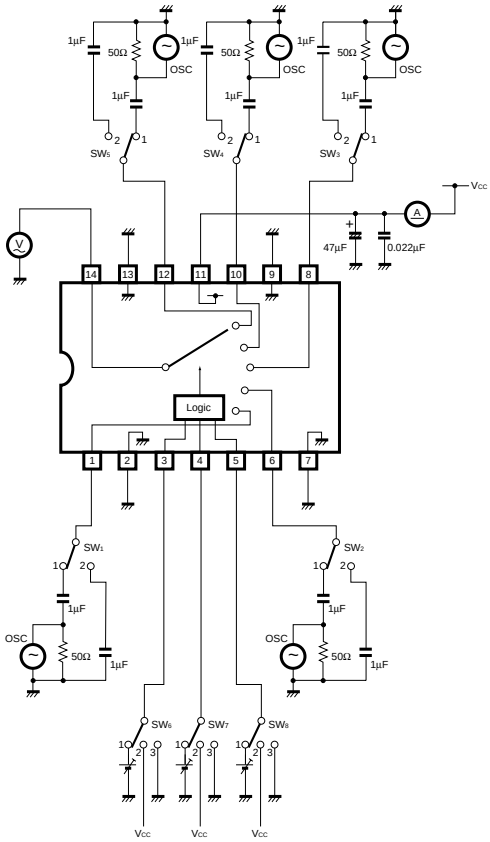

Fig. 1

●Measurement conditions

Parameter		Symbol	Switch settings								Measurement method
			SW_1	SW_2	SW_3	SW_4	SW_5	SW_6	SW_7	SW_8	
Current dissipation		I_{CC}	2	2	2	2	2	3	3	3	Ammeter
Maximum output level	IN 1	V_{om}	1	2	2	2	2	3	3	3	f = 1kHz, THD = 0.5% Note 1
	IN 2	V_{om}	2	1	2	2	2	3	2	3	
	IN 3	V_{om}	2	2	1	2	2	2	3	3	
	IN 4	V_{om}	2	2	2	1	2	2	2	3	
	IN 5	V_{om}	2	2	2	2	1	*	*	2	
Voltage gain	IN 1	G_V	1	2	2	2	2	3	3	3	f = 1MHz, V_{IN} = 1V_{P-P} Note 2
	IN 2	G_V	2	1	2	2	2	3	2	3	
	IN 3	G_V	2	2	1	2	2	2	3	3	
	IN 4	G_V	2	2	2	1	2	2	2	3	
	IN 5	G_V	2	2	2	2	1	*	*	2	
Interchannel crosstalk	IN1→1N2	C_T	1	2	2	2	2	3	2	3	f = 4.43MHz, V_{IN} = 1V_{P-P} Note 3
	IN1→1N3	C_T	1	2	2	2	2	2	3	3	
	IN1→1N4	C_T	1	2	2	2	2	2	2	3	
	IN1→1N5	C_T	1	2	2	2	2	*	*	2	
	IN2→1N3	C_T	2	1	2	2	2	2	3	3	
	IN2→1N4	C_T	2	1	2	2	2	2	2	3	
	IN2→1N5	C_T	2	1	2	2	2	*	*	2	
	IN3→1N4	C_T	2	2	1	2	2	2	2	3	
	IN3→1N5	C_T	2	2	1	2	2	*	*	2	
	IN4→1N5	C_T	2	2	2	1	2	*	*	2	
Frequency characteristic	IN 1	G_f	1	2	2	2	2	3	3	3	f = 10MHz, f = 1MHz, V_{IN} = 1V_{P-P} Note 4
	IN 2	G_f	2	1	2	2	2	3	2	3	
	IN 3	G_f	2	2	1	2	2	2	3	3	
	IN 4	G_f	2	2	2	1	2	2	2	3	
	IN 5	G_f	2	2	2	2	1	*	*	2	
CTL pin switching level	CTLA	V_{TH}	2	2	1	2	2	1	3	3	Note 5
	CTLB	V_{TH}	2	1	2	2	2	3	1	3	
	CTLC	V_{TH}	2	2	2	2	1	*	*	1	

* Anywhere is possible.

Note 1: Connect a distortion meter to the output, and input a f = 1kHz sine wave. Adjust the output level until the output distortion is 0.5%.
This output voltage at this time is the maximum output level V_{om} (V_{P-P}).

Note 2: Input a 1V_{P-P}, 1MHz sine wave. The voltage gain is given by G_V = 20 log (V_{OUT} / V_{IN}).

Note 3: Input a 1V_{P-P}, 4.43MHz sine wave. The interchannel crosstalk is given by C_T = 20 log (V_{OUT} / V_{IN}).

Note 4: Input 1V_{P-P}, 1MHz and 10MHz sine waves. The frequency characteristic is given by G_f = 20 log (V_{OUT} (f = 10MHz) / V_{OUT} (f = 1MHz)).

Note 5: Input a 1V_{P-P}, 1MHz sine wave. Reduce the CTL pin voltage from V_{CC}.
The CTL pin switching level (V_{TH}) is the CTL pin voltage at which the V_{OUT} level drops below 20mV_{P-P}.

●Electrical characteristic curves

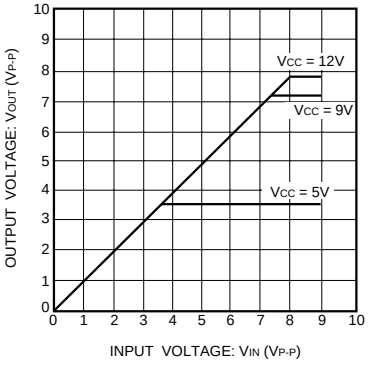

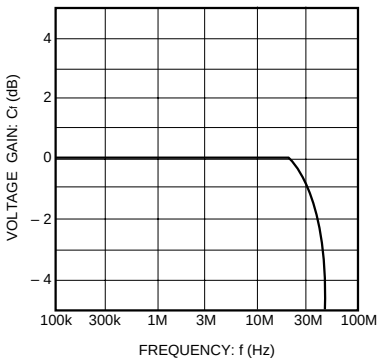

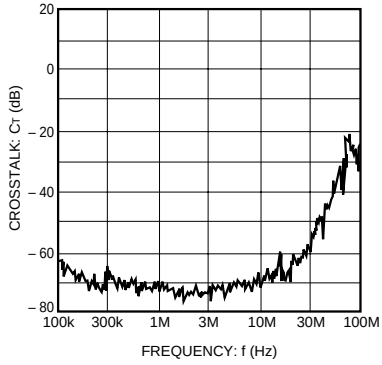

●External dimensions (Units: mm)

BA7469A

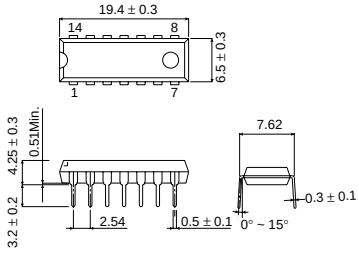

DIP14

BA7649AF

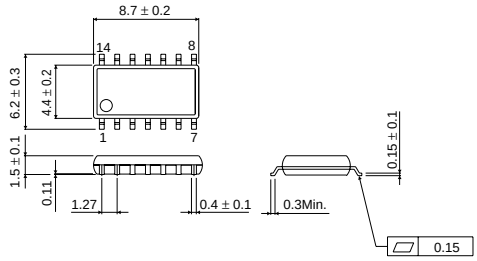

SOP14