查询BAR18供应商 捷多邦，专业PCB打样工厂，24小时加急出货

BAR 18
BAS70-04 06

SMALL SIGNAL SCHOTTKY DIODES

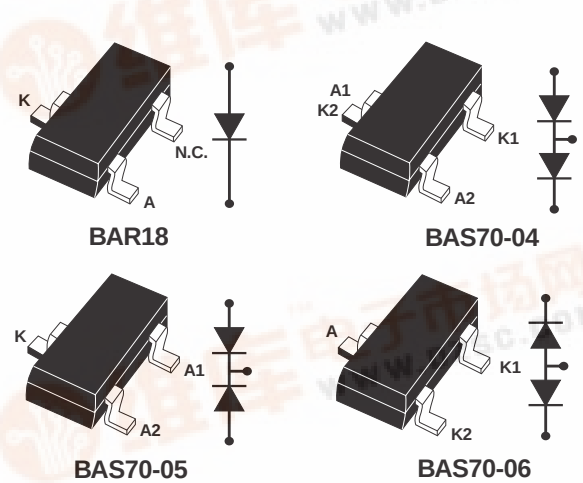

SOT-23
(Plastic)

DESCRIPTION

Low turn-on and high breakdown voltage diodes intended for ultrafast switching and UHF detectors in hybrid micro circuits.

ABSOLUTE RATINGS (limiting values)

Symbol	Parameter		Value	Unit
V_{RRM}	Repetitive peak reverse voltage		70	V
I_F	Continuous forward current		70	mA
P_{tot}	Power dissipation (note 1)	Tamb = 25°C	250	mW
T_{stg}	Maximum storage temperature range		- 65 to +150	°C
Tj	Maximum operating junction temperature *		150	°C
T_L	Maximum temperature for soldering during 10s		260	°C

Note 1: for double diodes, Ptot is the total dissipation of both diodes

$$* : \frac{dPtot}{dTj} < \frac{1}{Rth(j-a)}$$ thermal runaway condition for a diode on its own heatsink

THERMAL RESISTANCE

Symbol	Parameter	Value	Unit
$R_{th\ (j-a)}$	Junction to ambient (*)	500	°C/W

(*) Mounted on epoxy board with recommended pad layout.

找PDF 维库一下 pdf.dzsc.com

ELECTRICAL CHARACTERISTICS

STATIC CHARACTERISTICS

Symbol	Test Conditions	Min.	Typ.	Max.	Unit
V_{BR}	Tj = 25°C I_R = 10µA	70			V
V_F *	Tj = 25°C I_F = 1mA			410	mV
I_R **	Tj = 25°C V_R = 50V			200	nA

Pulse test: * tp = 380µs, δ < 2%
** tp = 5 ms, δ < 2%

DYNAMIC CHARACTERISTICS

Symbol	Test Conditions	Min.	Typ.	Max.	Unit
C	Tj = 25°C V_R = 0V F = 1MHz			2	pF
τ*	Tj = 25°C I_F = 5mA Krakauer Method			100	ps

* Effective carrier life time.

Fig. 1-1: Forward voltage drop versus forward current (low level).

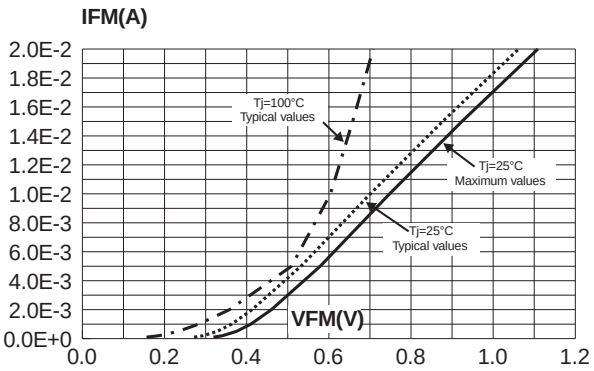

Fig. 1-2: Forward voltage drop versus forward current (high level).

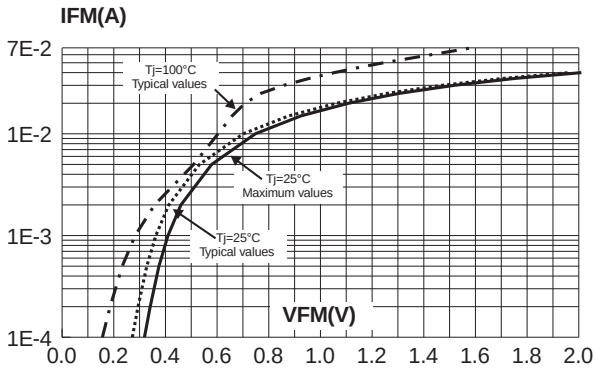

Fig. 2: Reverse leakage current versus reverse voltage applied (typical values).

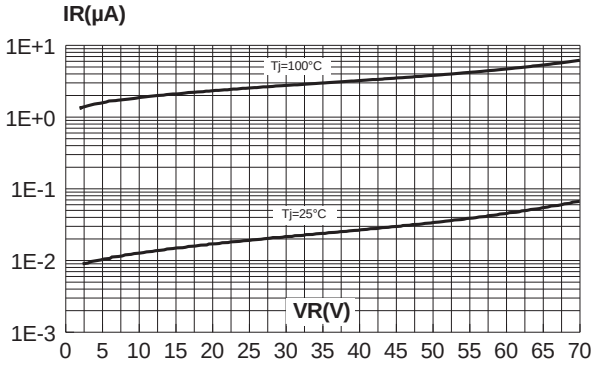

Fig. 3: Reverse leakage current versus junction temperature (typical values)

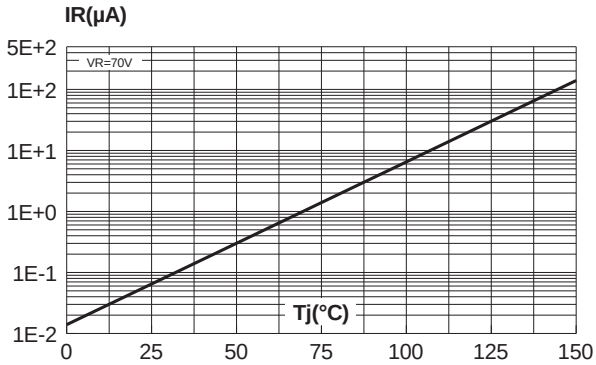

Fig. 4: Junction capacitance versus reverse voltage applied (typical values).

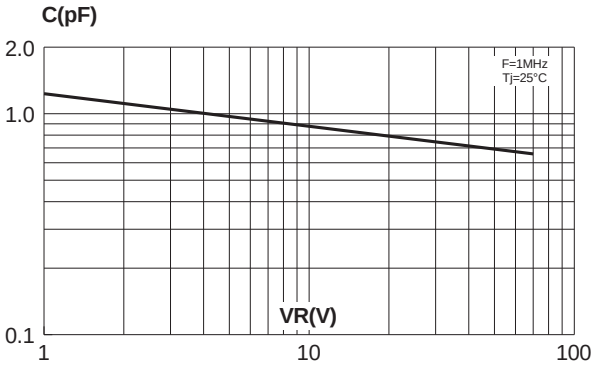

Fig. 5: Relative variation of thermal impedance junction to ambient versus pulse duration (alumine substrate 10mm*8mm*0.5mm).

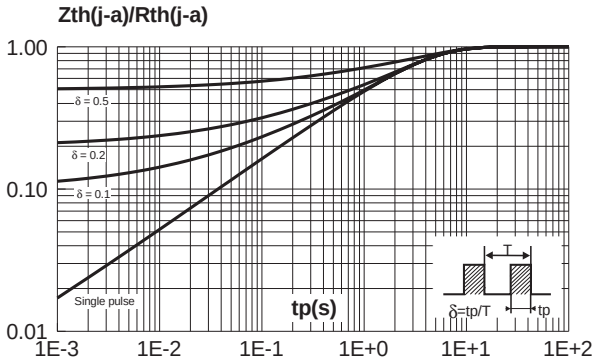

Fig. 6: Thermal resistance junction to ambient versus copper surface under each lead (Epoxy printed circuit board FR4, copper thickness: 35µm).

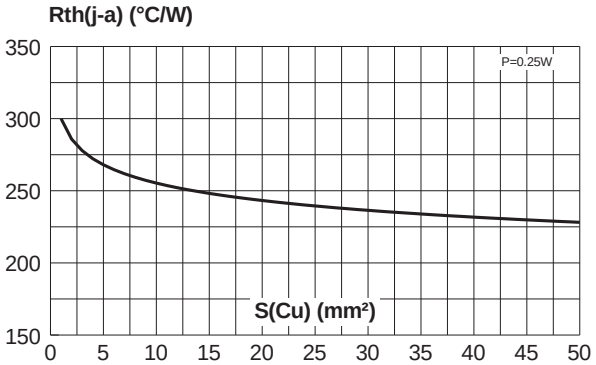

PACKAGE MECHANICAL DATA

SOT23 (Plastic)

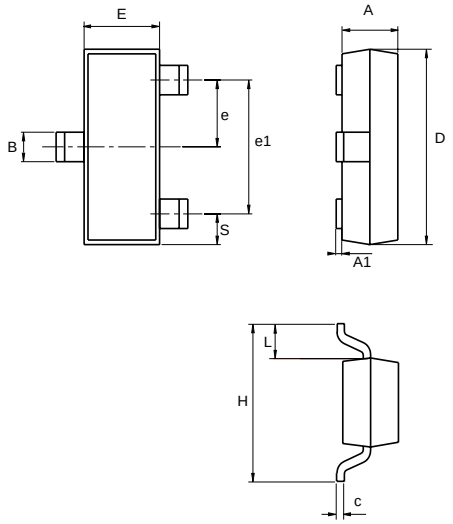

REF.	DIMENSIONS			
	Millimeters		Inches	
	Min.	Max.	Min.	Max.
A	0.89	1.4	0.035	0.055
A1	0	0.1	0	0.004
B	0.3	0.51	0.012	0.02
c	0.085	0.18	0.003	0.007
D	2.75	3.04	0.108	0.12
e	0.85	1.05	0.033	0.041
e1	1.7	2.1	0.067	0.083
E	1.2	1.6	0.047	0.063
H	2.1	2.75	0.083	0.108
L	0.6 typ.		0.024 typ.	
S	0.35	0.65	0.014	0.026

FOOTPRINT DIMENSIONS

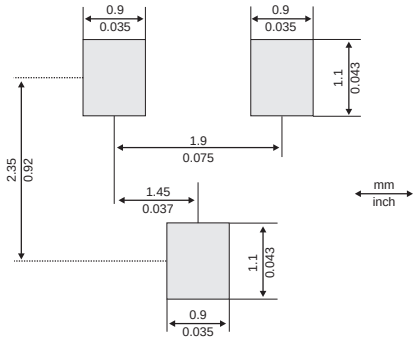

Ordering type	Marking	Package	Weight	Base qty	Delivery mode
BAR18	D76	SOT-23	0.01g	3000	Tape & reel
BAS70-04	D96	SOT-23	0.01g	3000	Tape & reel
BAS70-05	D97	SOT-23	0.01g	3000	Tape & reel
BAS70-06	D98	SOT-23	0.01g	3000	Tape & reel

- Epoxy meets UL94,V0

Information furnished is believed to be accurate and reliable. However, STMicroelectronics assumes no responsibility for the consequences of use of such information nor for any infringement of patents or other rights of third parties which may result from its use. No license is granted by implication or otherwise under any patent or patent rights of STMicroelectronics. Specifications mentioned in this publication are subject to change without notice. This publication supersedes and replaces all information previously supplied.
STMicroelectronics products are not authorized for use as critical components in life support devices or systems without express written approval of STMicroelectronics.

The ST logo is a registered trademark of STMicroelectronics

© 2001 STMicroelectronics - Printed in Italy - All rights reserved.

STMicroelectronics GROUP OF COMPANIES
Australia - Brazil - Canada - China - Finland - France - Germany
Hong Kong - India - Israel - Italy - Japan - Malaysia - Malta - Morocco - Singapore
Spain - Sweden - Switzerland - United Kingdom - United States.

http://www.st.com