Silicon Switching Diodes

- Switching applications
- High breakdown voltage
- Common cathode

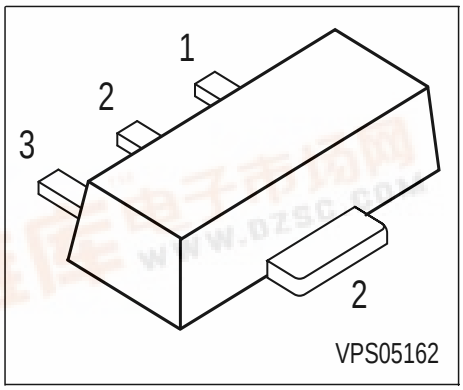

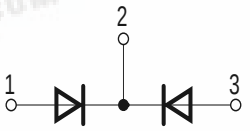

EHA07003

Type	Marking	Pin Configuration			Package
BAW79A	GE	1 = A1	2 = C1/2	3 = A2	SOT89
BAW79B	GF	1 = A1	2 = C1/2	3 = A2	SOT89
BAW79C	GG	1 = A1	2 = C1/2	3 = A2	SOT89
BAW79D	GH	1 = A1	2 = C1/2	3 = A2	SOT89

Maximum Ratings

Parameter	Symbol	BAW 79A	BAW 79B	BAW 79C	BAW 79D	Unit
Diode reverse voltage	V_R	50	100	200	400	V
Peak reverse voltage	V_{RM}	50	100	200	400	
Forward current	I_F	1				A
Peak forward current	I_{FM}	1				
Surge forward current, t = 1 µs	I_{FS}	10				
Total power dissipation, T_S = 115 °C	P_{tot}	1				W
Junction temperature	T_j	150				°C
Storage temperature	T_{stg}	-65 ... 150				

Thermal Resistance

Junction - soldering point[1)]	R_{thJS}	≤ 35	K/W

[1]For calculation of R_{thJA} please refer to Application Note Thermal Resistance

Electrical Characteristics at T_A = 25°C, unless otherwise specified.

Parameter		Symbol	Values			Unit
			min.	typ.	max.	
DC characteristics						
Breakdown voltage		$V_{(BR)}$				V
$I_{(BR)}$ = 100 µA	BAW79A		50	-	-	
	BAW79B		100	-	-	
	BAW79C		200	-	-	
	BAW79D		400	-	-	
Forward voltage		V_F				
I_F = 1 A			-	-	1.6	
I_F = 2 A			-	-	2	
Reverse current $V_R = V_{Rmax}$		I_R	-	-	1	µA
Reverse current $V_R = V_{Rmax}$, T_A = 150 °C		I_R	-	-	50	
AC characteristics						
Diode capacitance V_R = 0 V, f = 1 MHz		C_D	-	10	-	pF
Reverse recovery time I_F = 200 mA, I_R = 200 mA, R_L = 100 Ω, measured at I_R = 20mA		t_{rr}	-	1	-	µs

Test circuit for reverse recovery time

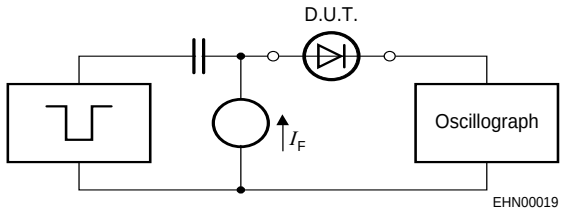

Pulse generator: t_p = 10µs, D = 0.05, t_r = 0.6ns, R_i = 50Ω

Oscillograph: R = 50Ω, t_r = 0.35ns, $C \leq$ 1pF

Forward current $I_F = f(T_S)$

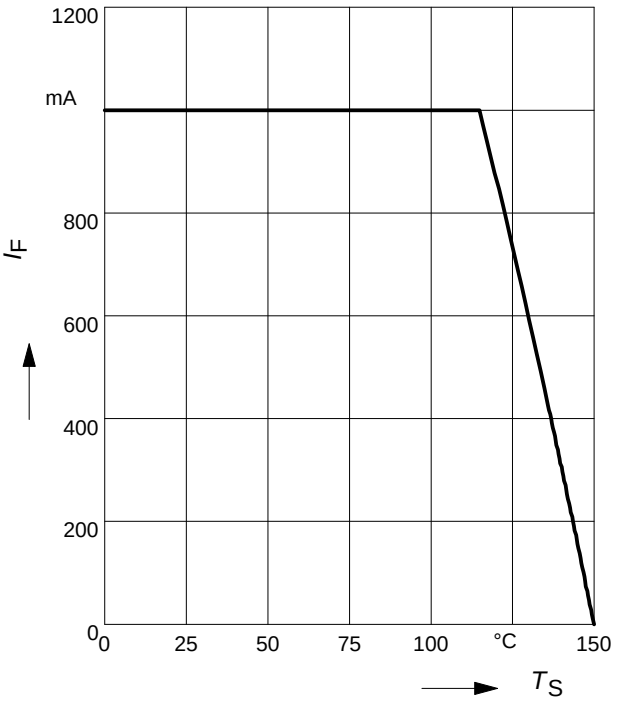

Forward current $I_F = f(V_F)$

T_A = 25°C

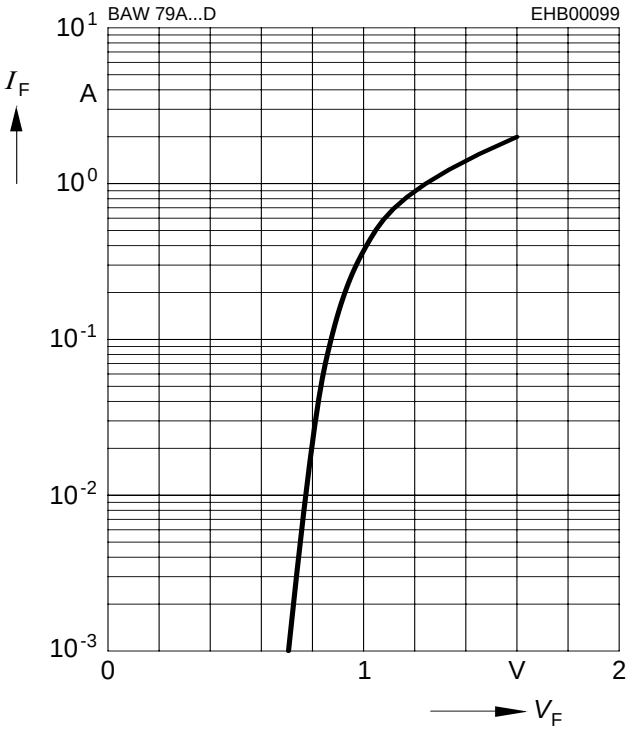

Peak forward current $I_{FM} = f(t_p)$

T_A = 25°C

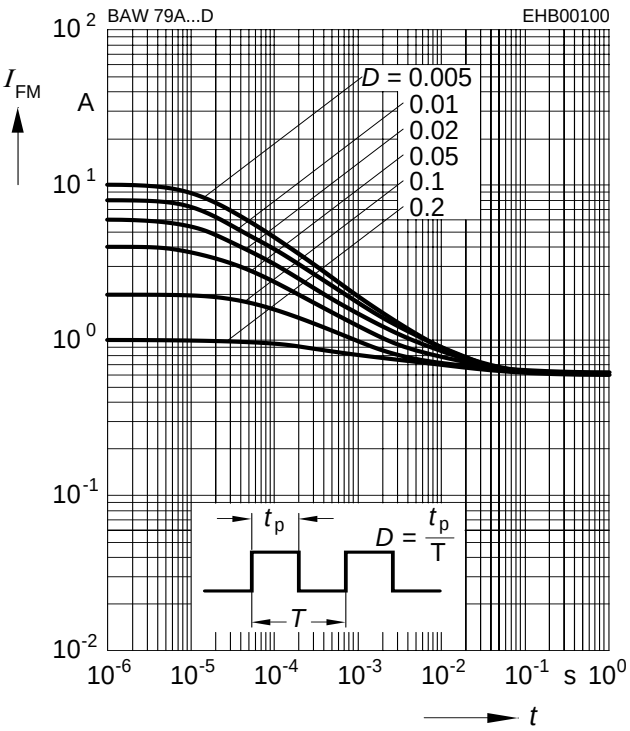

Reverse current $I_R = f(T_A)$

$V_R = V_{Rmax}$