查询BB502M供应商 捷多邦，专业PCB打样工厂，24小时加急出货

BB502M

Build in Biasing Circuit MOS FET IC
UHF RF Amplifier

HITACHI

ADE-208-809B(Z)
3rd. Edition
Jun. 1999

Features

- Build in Biasing Circuit; To reduce using parts cost & PC board space.
- Low noise; NF = 1.6 dB typ. at f = 900 MHz
- High gain; PG = 22 dB typ. at f = 900 MHz
- Withstanding to ESD;
  Build in ESD absorbing diode. Withstand up to 200V at C=200pF, Rs=0 conditions.
- Provide mini mold packages; MPAK-4(SOT-143mod)

Outline

MPAK-4

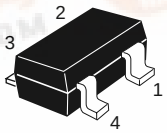

1. Source
2. Gate1
3. Gate2
4. Drain

Notes: 1. Marking is “BS–”.
2. BB502M is individual type number of HITACHI BBFET.

找PDF 维库一下 pdf.dzsc.com

Hitachi semiconductor

BB502M

Absolute Maximum Ratings (Ta = 25°C)

Item	Symbol	Ratings	Unit
Drain to source voltage	V_{DS}	6	V
Gate1 to source voltage	V_{G1S}	+6 –0	V
Gate2 to source voltage	V_{G2S}	+6 –0	V
Drain current	I_D	20	mA
Channel power dissipation	Pch	150	mW
Channel temperature	Tch	150	°C
Storage temperature	Tstg	–55 to +150	°C

Electrical Characteristics (Ta = 25°C)

Item	Symbol	Min	Typ	Max	Unit	Test Conditions
Drain to source breakdown voltage	$V_{(BR)DSS}$	6	—	—	V	I_D = 200µA V_{G1S} = V_{G2S} = 0
Gate1 to source breakdown voltage	$V_{(BR)G1SS}$	+6	—	—	V	I_{G1} = +10µA V_{G2S} = V_{DS} = 0
Gate2 to source breakdown voltage	$V_{(BR)G2SS}$	+6	—	—	V	I_{G2} = +10µA V_{G1S} = V_{DS} = 0
Gate1 to source cutoff current	I_{G1SS}	—	—	+100	nA	V_{G1S} = +5V V_{G2S} = V_{DS} = 0
Gate2 to source cutoff current	I_{G2SS}	—	—	+100	nA	V_{G2S} = +5V V_{G1S} = V_{DS} = 0
Gate1 to source cutoff voltage	$V_{G1S(off)}$	0.5	0.7	1.0	V	V_{DS} = 5V, V_{G2S} = 4V I_D = 100µA
Gate2 to source cutoff voltage	$V_{G2S(off)}$	0.5	0.7	1.0	V	V_{DS} = 5V, V_{G1S} = 5V I_D = 100µA
Drain current	$I_{D(op)}$	8	11	14	mA	V_{DS} = 5V, V_{G1} = 5V V_{G2S} = 4V, R_G = 180kΩ
Forward transfer admittance	$\|y_{fs}\|$	20	25	30	mS	V_{DS} = 5V, V_{G1} = 5V V_{G2S} =4V R_G = 180kΩ, f = 1kHz
Input capacitance	c_{iss}	1.4	1.7	2.0	pF	V_{DS} = 5V, V_{G1} = 5V
Output capacitance	c_{oss}	0.7	1.1	1.5	pF	V_{G2S} =4V, R_G = 180kΩ
Reverse transfer capacitance	c_{rss}	—	0.02	0.05	pF	f = 1MHz
Power gain	PG	17	22	—	dB	V_{DS} = 5V, V_{G1} = 5V V_{G2S} =4V, R_G = 180kΩ
Noise figure	NF	—	1.6	2.2	dB	f = 900MHz

Main Characteristics

Test Circuit for Operating Items ($I_{D(op)}$, |yfs|, Ciss, Coss, Crss, NF, PG)

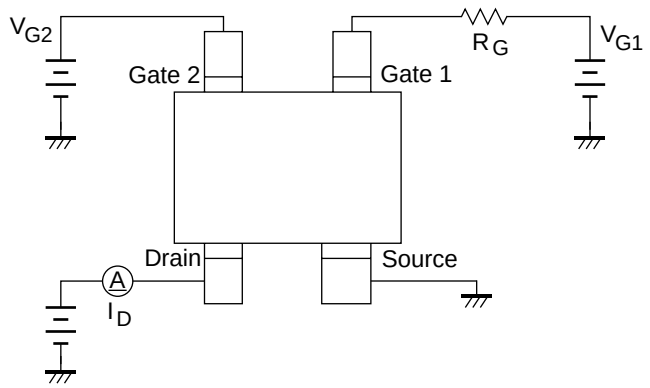

Application Circuit

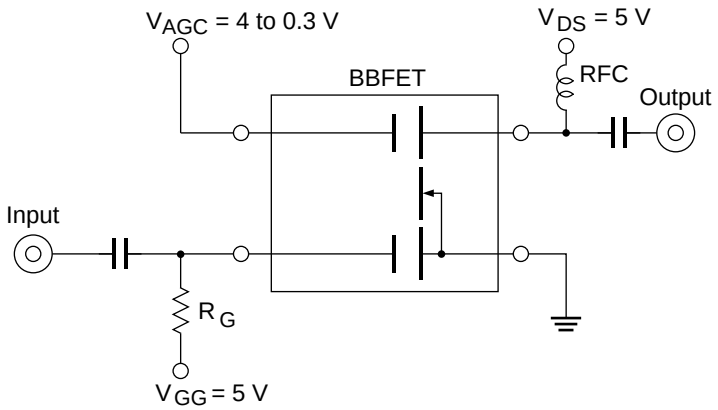

900MHz Power Gain, Noise Test Circuit

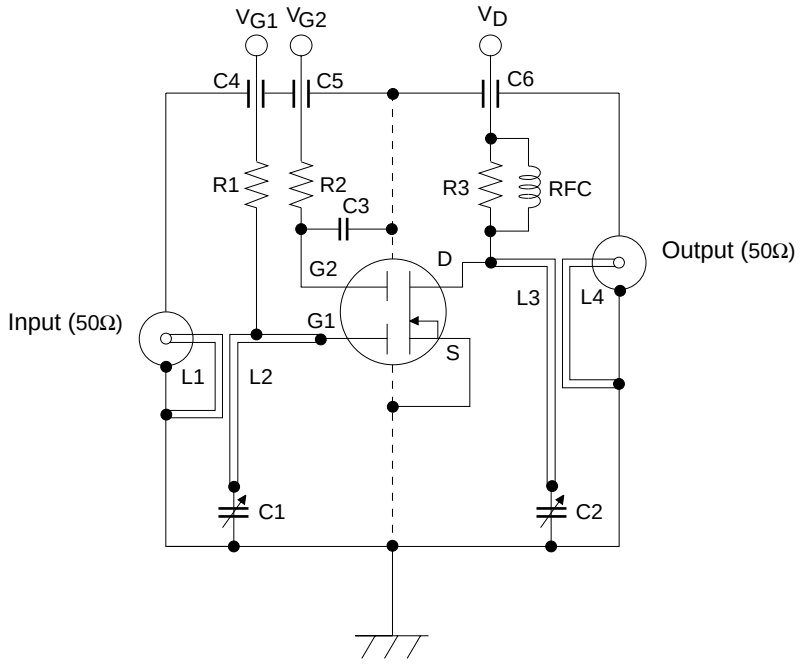

C1, C2 :	Variable Capacitor (10pF MAX)
C3 :	Disk Capacitor (1000pF)
C4 to C6 :	Air Capacitor (1000pF)
R1 :	180 kΩ
R2 :	47 kΩ
R3 :	4.7 kΩ

L1:

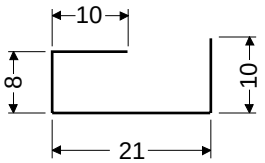

L2:

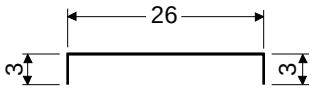

(ϕ1mm Copper wire)
Unit: mm

L3:

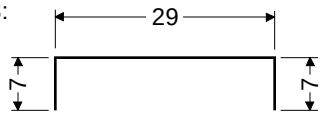

L4:

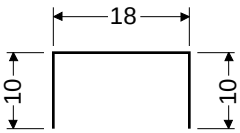

RFC: ϕ1mm Copper wire with enamel 4turns inside dia 6mm

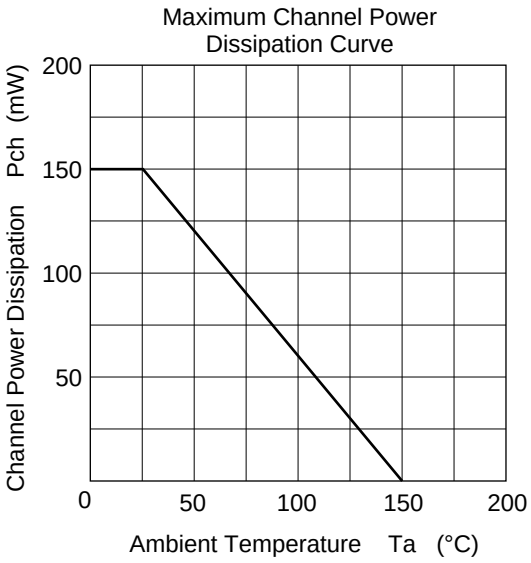
Maximum Channel Power Dissipation Curve
Channel Power Dissipation Pch (mW)
200
150
100
50
0
50
100
150
200
Ambient Temperature Ta (°C)

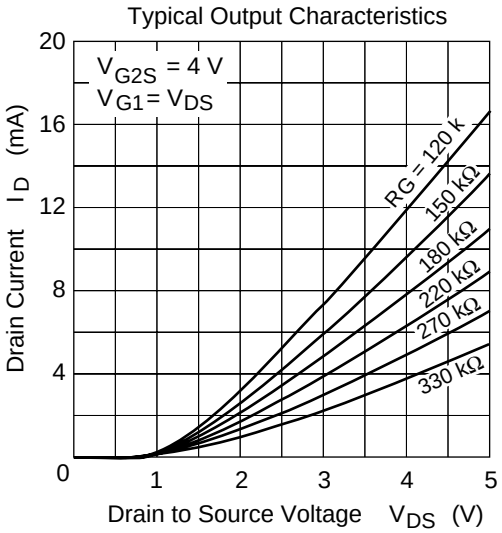
Typical Output Characteristics
VG2S = 4 V
VG1 = VDS
RG = 120 k
150 kΩ
180 kΩ
220 kΩ
270 kΩ
330 kΩ
Drain Current ID (mA)
20
16
12
8
4
0
1
2
3
4
5
Drain to Source Voltage VDS (V)

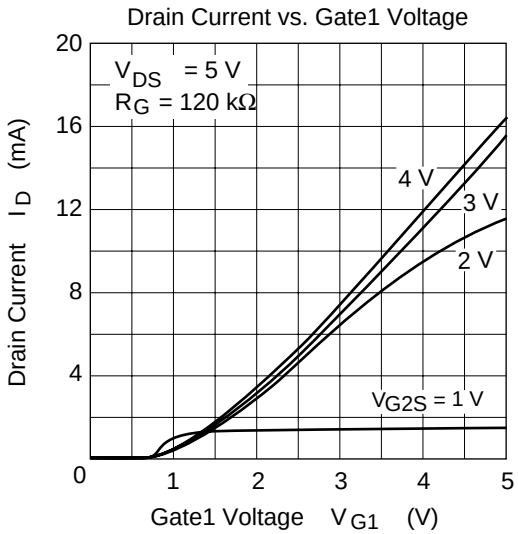
Drain Current vs. Gate1 Voltage
VDS = 5 V
RG = 120 kΩ
4 V
3 V
2 V
VG2S = 1 V
Drain Current ID (mA)
20
16
12
8
4
0
1
2
3
4
5
Gate1 Voltage VG1 (V)

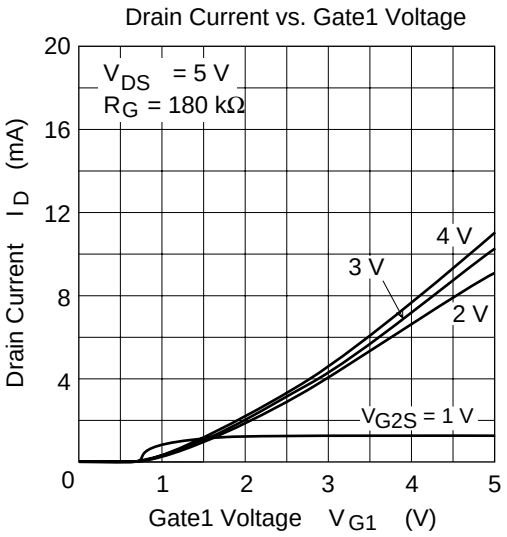
Drain Current vs. Gate1 Voltage
VDS = 5 V
RG = 180 kΩ
4 V
3 V
2 V
VG2S = 1 V
Drain Current ID (mA)
20
16
12
8
4
0
1
2
3
4
5
Gate1 Voltage VG1 (V)

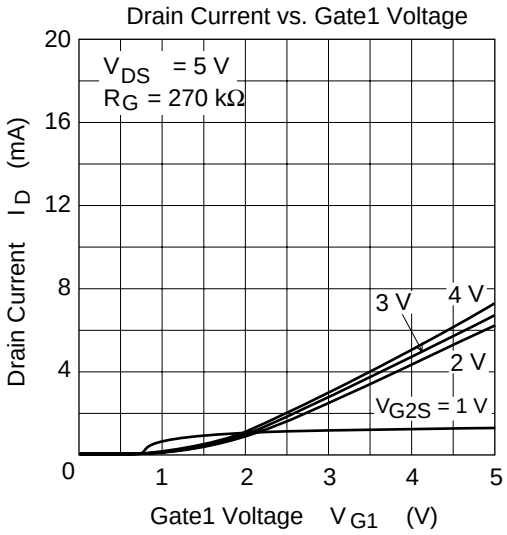
Drain Current vs. Gate1 Voltage
V_{DS} = 5 V
R_G = 270 kΩ
Drain Current I_D (mA)
Gate1 Voltage V_{G1} (V)
3 V
4 V
2 V
V_{G2S} = 1 V

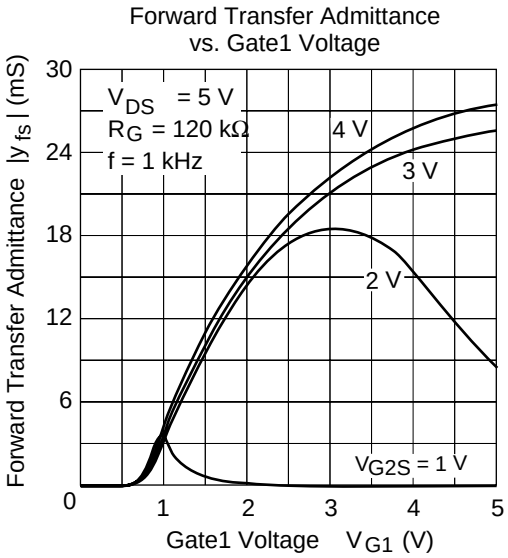
Forward Transfer Admittance
vs. Gate1 Voltage
V_{DS} = 5 V
R_G = 120 kΩ
f = 1 kHz
Forward Transfer Admittance $|y_{fs}|$ (mS)
Gate1 Voltage V_{G1} (V)
4 V
3 V
2 V
V_{G2S} = 1 V

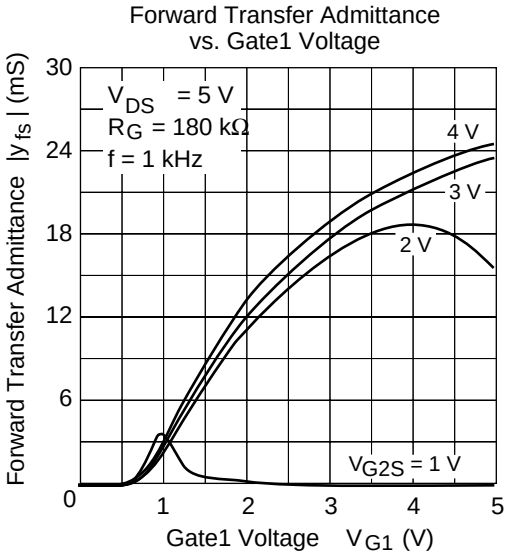
Forward Transfer Admittance
vs. Gate1 Voltage
V_{DS} = 5 V
R_G = 180 kΩ
f = 1 kHz
Forward Transfer Admittance $|y_{fs}|$ (mS)
Gate1 Voltage V_{G1} (V)
4 V
3 V
2 V
V_{G2S} = 1 V

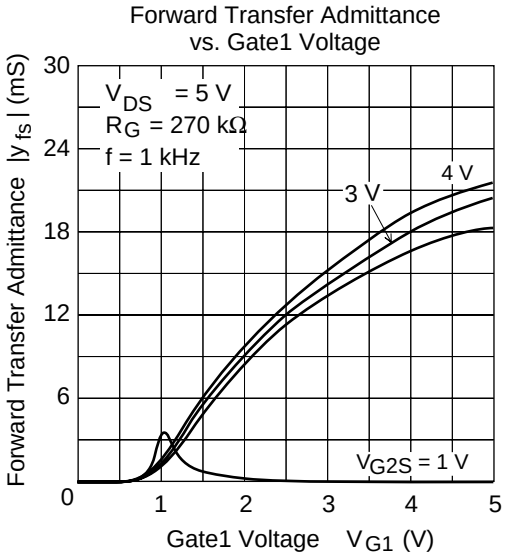
Forward Transfer Admittance
vs. Gate1 Voltage
V_{DS} = 5 V
R_G = 270 kΩ
f = 1 kHz
Forward Transfer Admittance $|y_{fs}|$ (mS)
Gate1 Voltage V_{G1} (V)
4 V
3 V
V_{G2S} = 1 V

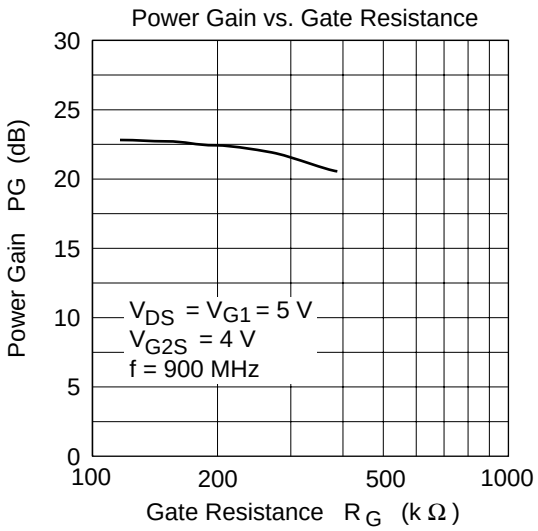
Power Gain vs. Gate Resistance
Power Gain PG (dB)
30
25
20
15
10
5
0
100
200
500
1000
Gate Resistance R G (k Ω)
V DS = V G1 = 5 V
V G2S = 4 V
f = 900 MHz

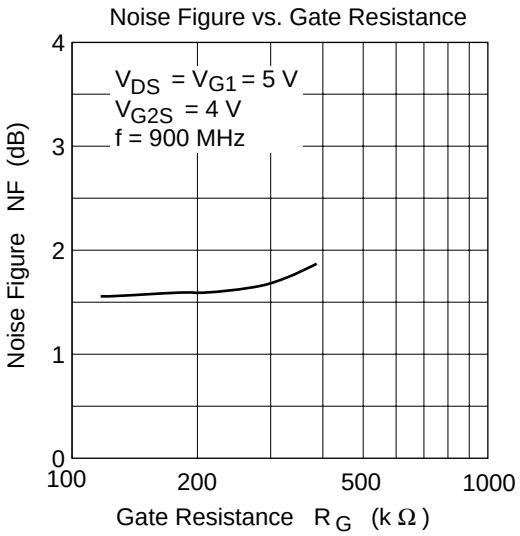
Noise Figure vs. Gate Resistance
Noise Figure NF (dB)
4
3
2
1
0
100
200
500
1000
Gate Resistance R G (k Ω)
V DS = V G1 = 5 V
V G2S = 4 V
f = 900 MHz

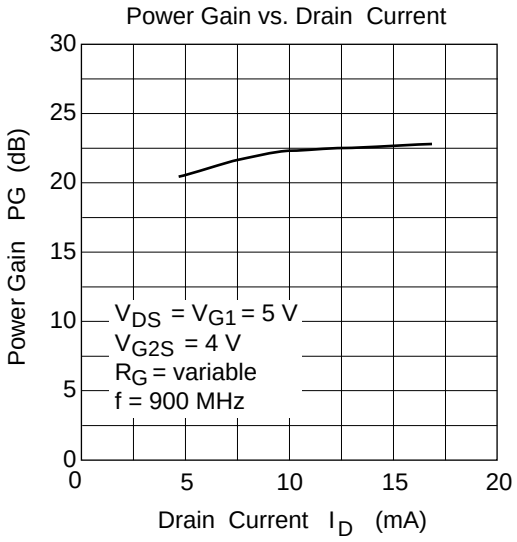
Power Gain vs. Drain Current
Power Gain PG (dB)
30
25
20
15
10
5
0
0
5
10
15
20
Drain Current I D (mA)
V DS = V G1 = 5 V
V G2S = 4 V
R G = variable
f = 900 MHz

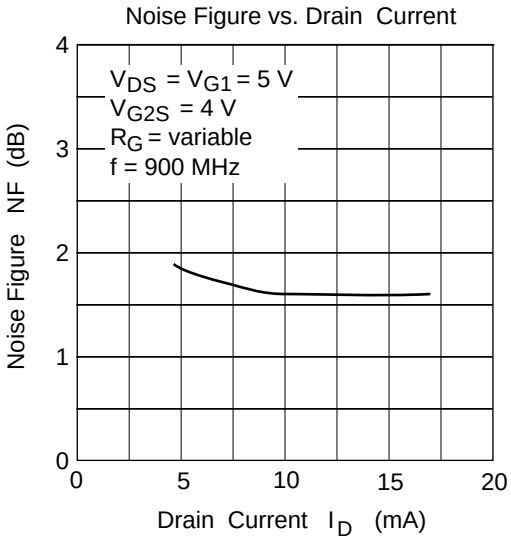
Noise Figure vs. Drain Current
Noise Figure NF (dB)
4
3
2
1
0
0
5
10
15
20
Drain Current I D (mA)
V DS = V G1 = 5 V
V G2S = 4 V
R G = variable
f = 900 MHz

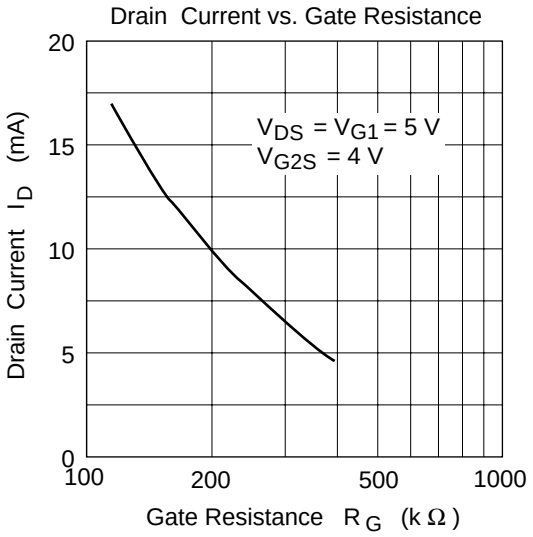
Drain Current vs. Gate Resistance
Drain Current I_D (mA)
Gate Resistance R_G (k Ω)
V_{DS} = V_{G1} = 5 V
V_{G2S} = 4 V
0
5
10
15
20
100
200
500
1000

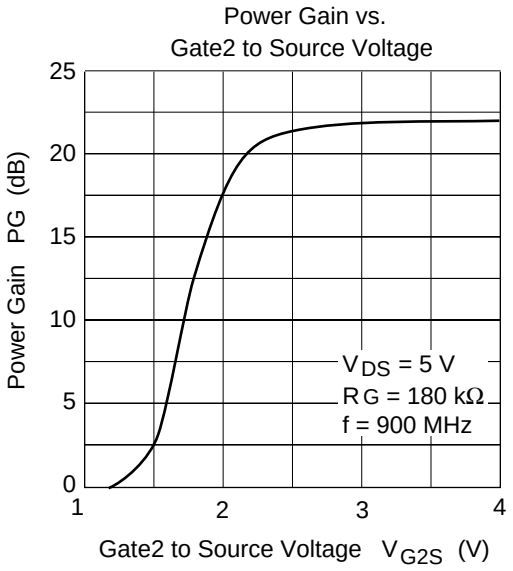
Power Gain vs.
Gate2 to Source Voltage
Power Gain PG (dB)
Gate2 to Source Voltage V_{G2S} (V)
V_{DS} = 5 V
R_G = 180 kΩ
f = 900 MHz
0
5
10
15
20
25
1
2
3
4

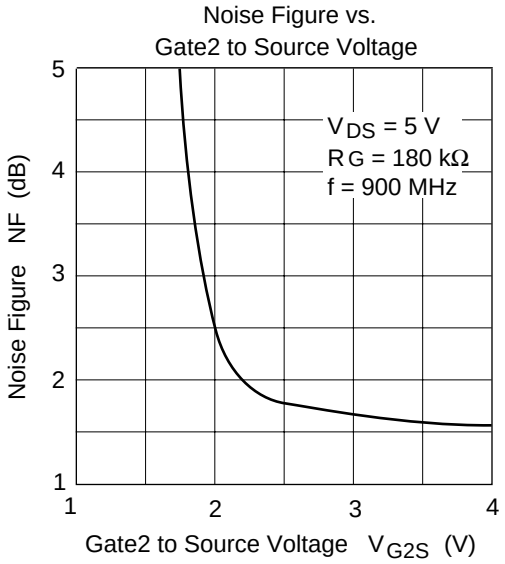
Noise Figure vs.
Gate2 to Source Voltage
Noise Figure NF (dB)
Gate2 to Source Voltage V_{G2S} (V)
V_{DS} = 5 V
R_G = 180 kΩ
f = 900 MHz
1
2
3
4
5
1
2
3
4

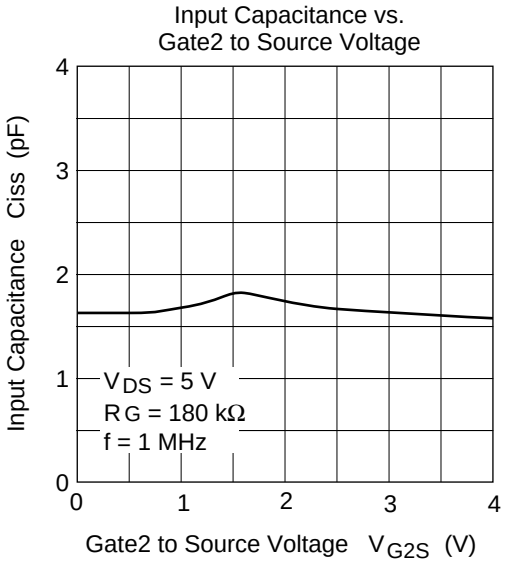
Input Capacitance vs.
Gate2 to Source Voltage
Input Capacitance Ciss (pF)
Gate2 to Source Voltage V_{G2S} (V)
V_{DS} = 5 V
R_G = 180 kΩ
f = 1 MHz
0
1
2
3
4
0
1
2
3
4

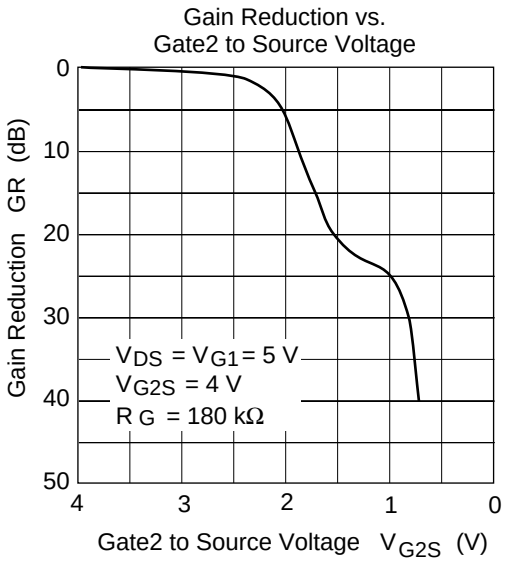
Gain Reduction vs.
Gate2 to Source Voltage
Gain Reduction GR (dB)
0
10
20
30
40
50
4
3
2
1
0
VDS = VG1 = 5 V
VG2S = 4 V
R G = 180 kΩ
Gate2 to Source Voltage VG2S (V)

S11 Parameter vs. Frequency

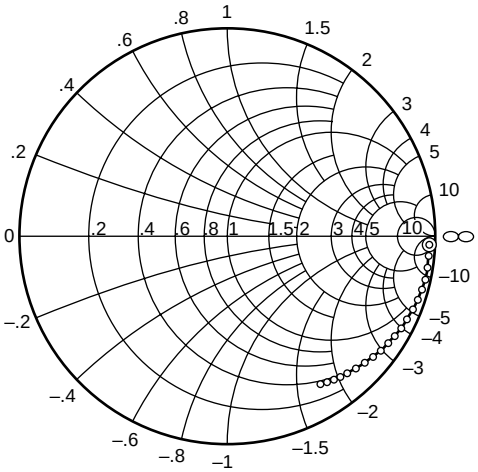

Test Condition; V_{DS}= 5 V , V_{G1}= 5 V
V_{G2S} = 4 V , R_G = 180 kΩ ,
Zo = 50 Ω

50 to 1000 MHz (50 MHz step)

S21 Parameter vs. Frequency

Scale: 1 / div.

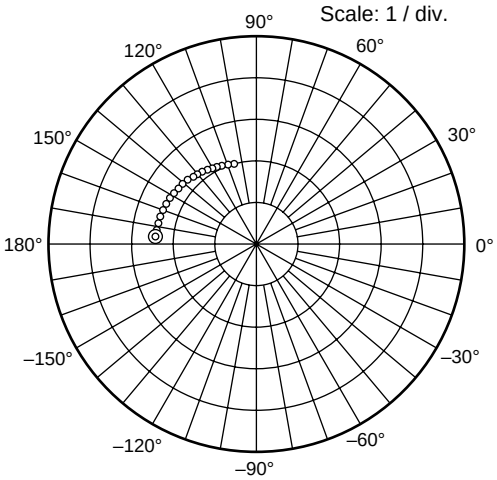

Test Condition: V_{DS}= 5 V , V_{G1}= 5 V
V_{G2S} = 4 V , R_G = 180 kΩ ,
Zo = 50 Ω

50 to 1000 MHz (50 MHz step)

S12 Parameter vs. Frequency

Scale: 0.002 / div.

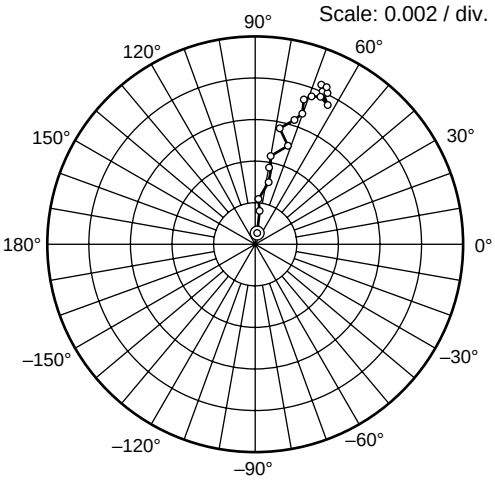

Test Condition: V_{DS}= 5 V , V_{G1}= 5 V
V_{G2S} = 4 V , R_G = 180 kΩ ,
Zo = 50 Ω

50 to 1000 MHz (50 MHz step)

S22 Parameter vs. Frequency

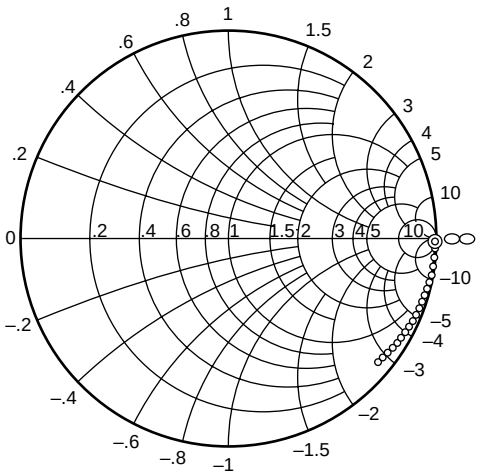

Test Condition: V_{DS}= 5 V , V_{G1}= 5 V
V_{G2S} = 4 V , R_G = 180 kΩ ,
Zo = 50 Ω

50 to 1000 MHz (50 MHz step)

Sparameter (V_{DS} = V_{G1} = 5V, V_{G2S} = 4V, R_G = 180kΩ, Zo = 50Ω)

	S11		S21		S12		S22	
f (MHz)	MAG	ANG	MAG	ANG	MAG	ANG	MAG	ANG
50	0.994	–2.8	2.52	176.2	0.00072	88.6	0.995	–2.2
100	0.994	–5.7	2.51	172.4	0.00161	80.9	0.998	–4.0
150	0.991	–9.2	2.50	168.1	0.00230	86.6	0.997	–6.2
200	0.985	–12.5	2.47	164.1	0.00297	78.0	0.996	–8.2
250	0.985	–15.5	2.46	160.0	0.00374	78.9	0.994	–10.2
300	0.975	–18.7	2.43	156.4	0.00436	80.6	0.992	–12.2
350	0.969	–22.0	2.40	152.3	0.00507	70.9	0.990	–14.2
400	0.962	–24.9	2.38	148.6	0.00557	77.3	0.989	–16.3
450	0.954	–27.7	2.35	144.6	0.00625	72.4	0.987	–18.5
500	0.945	–30.8	2.31	141.0	0.00663	70.0	0.984	–20.4
550	0.935	–33.8	2.28	136.7	0.00721	70.5	0.981	–22.4
600	0.925	–36.6	2.25	133.4	0.00747	68.4	0.978	–24.3
650	0.918	–39.5	2.21	130.3	0.00761	65.6	0.975	–26.4
700	0.909	–42.5	2.18	126.1	0.00807	65.6	0.972	–28.3
750	0.898	–45.0	2.14	122.9	0.00828	67.6	0.969	–30.2
800	0.887	–47.8	2.09	119.5	0.00801	65.1	0.965	–32.2
850	0.874	–50.6	2.07	116.0	0.00815	63.6	0.961	–34.2
900	0.862	–53.0	2.03	112.7	0.00832	65.1	0.958	–36.1
950	0.855	–55.5	1.99	109.4	0.00738	61.8	0.954	–37.9
1000	0.845	–58.1	1.95	106.1	0.00802	65.8	0.951	–39.8

BB502M

Package Dimensions

Unit: mm

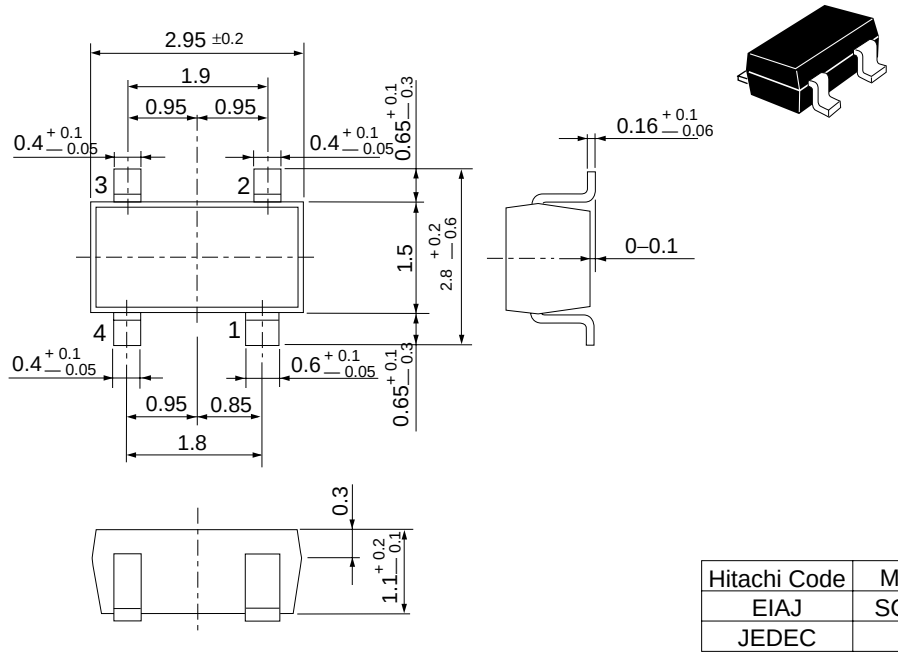

Hitachi Code	MPAK—4
EIAJ	SC—61AA
JEDEC	

Cautions

1. Hitachi neither warrants nor grants licenses of any rights of Hitachi's or any third party's patent, copyright, trademark, or other intellectual property rights for information contained in this document. Hitachi bears no responsibility for problems that may arise with third party's rights, including intellectual property rights, in connection with use of the information contained in this document.
2. Products and product specifications may be subject to change without notice. Confirm that you have received the latest product standards or specifications before final design, purchase or use.
3. Hitachi makes every attempt to ensure that its products are of high quality and reliability. However, contact Hitachi's sales office before using the product in an application that demands especially high quality and reliability or where its failure or malfunction may directly threaten human life or cause risk of bodily injury, such as aerospace, aeronautics, nuclear power, combustion control, transportation, traffic, safety equipment or medical equipment for life support.
4. Design your application so that the product is used within the ranges guaranteed by Hitachi particularly for maximum rating, operating supply voltage range, heat radiation characteristics, installation conditions and other characteristics. Hitachi bears no responsibility for failure or damage when used beyond the guaranteed ranges. Even within the guaranteed ranges, consider normally foreseeable failure rates or failure modes in semiconductor devices and employ systemic measures such as fail-safes, so that the equipment incorporating Hitachi product does not cause bodily injury, fire or other consequential damage due to operation of the Hitachi product.
5. This product is not designed to be radiation resistant.
6. No one is permitted to reproduce or duplicate, in any form, the whole or part of this document without written approval from Hitachi.
7. Contact Hitachi's sales office for any questions regarding this document or Hitachi semiconductor products.

HITACHI

Hitachi, Ltd.
Semiconductor & Integrated Circuits.
Nippon Bldg., 2-6-2, Ohte-machi, Chiyoda-ku, Tokyo 100-0004, Japan
Tel: Tokyo (03) 3270-2111 Fax: (03) 3270-5109

URL	NorthAmerica	:	http:semiconductor.hitachi.com/
	Europe	:	http://www.hitachi-eu.com/hel/ecg
	Asia (Singapore)	:	http://www.has.hitachi.com.sg/grp3/sicd/index.htm
	Asia (Taiwan)	:	http://www.hitachi.com.tw/E/Product/SICD_Frame.htm
	Asia (HongKong)	:	http://www.hitachi.com.hk/eng/bo/grp3/index.htm
	Japan	:	http://www.hitachi.co.jp/Sicd/indx.htm

For further information write to:

Hitachi Semiconductor
(America) Inc.
179 East Tasman Drive,
San Jose,CA 95134
Tel: <1> (408) 433-1990
Fax: <1>(408) 433-0223

Hitachi Europe GmbH
Electronic components Group
Dornacher Straße 3
D-85622 Feldkirchen, Munich
Germany
Tel: <49> (89) 9 9180-0
Fax: <49> (89) 9 29 30 00

Hitachi Europe Ltd.
Electronic Components Group.
Whitebrook Park
Lower Cookham Road
Maidenhead
Berkshire SL6 8YA, United Kingdom
Tel: <44> (1628) 585000
Fax: <44> (1628) 778322

Hitachi Asia Pte. Ltd.
16 Collyer Quay #20-00
Hitachi Tower
Singapore 049318
Tel: 535-2100
Fax: 535-1533

Hitachi Asia Ltd.
Taipei Branch Office
3F, Hung Kuo Building. No.167,
Tun-Hwa North Road, Taipei (105)
Tel: <886> (2) 2718-3666
Fax: <886> (2) 2718-8180

Hitachi Asia (Hong Kong) Ltd.
Group III (Electronic Components)
7/F., North Tower, World Finance Centre,
Harbour City, Canton Road, Tsim Sha Tsui,
Kowloon, Hong Kong
Tel: <852> (2) 735 9218
Fax: <852> (2) 730 0281
Telex: 40815 HITEC HX

Copyright © Hitachi, Ltd., 1998. All rights reserved. Printed in Japan.