National Semiconductor

查询BC212供应商 捷多邦，专业PCB打样工厂，24小时加急出货

Process 63 PNP Medium Pow

356-682

BC 212/213/214

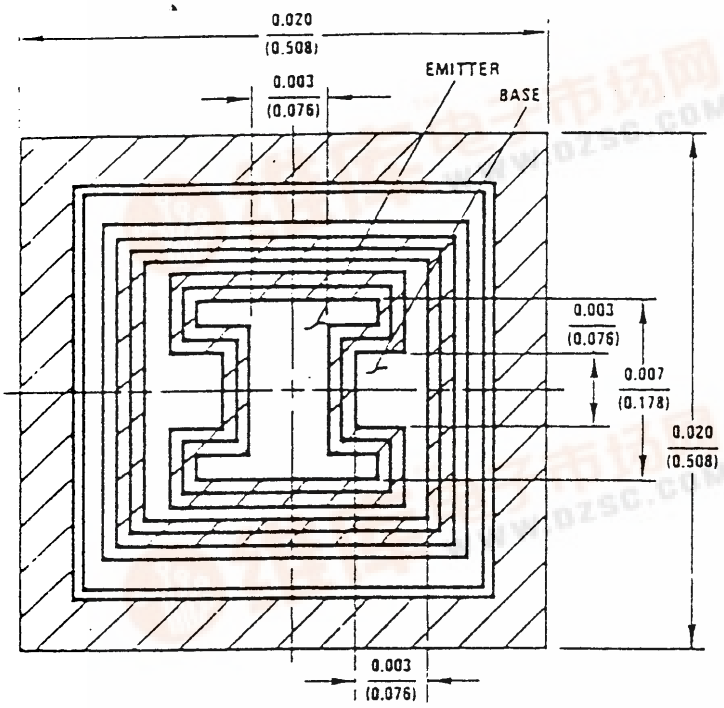

DESCRIPTION

Process 63 is a non-overlay, double-diffused, sil epitaxial device. Complement to Process 19.

APPLICATION

This device was designed for use as general purp amplifiers and switches requiring collector current 500 mA.

PRINCIPAL DEVICE TYPES

TO-5:	2N2905
TO-18:	2N2907
TO-92, EBC:	2N4403
TO-92, ECB:	2N3702
TO-237:	TN2905

Parameter	Conditions	Min	Typ	Max	Units	Note
t_{ON}	$I_C = 150$ mA, $I_{B1} = 15$ mA		30	45	ns	*Figure*
t_{OFF}	$I_C = 150$ mA, $I_{B2} = 15$ mA		220	290	ns	*Figure*
C_{CB}	$V_{CB} = 10$V		6	8	pF	
C_{EB}	$V_{EB} = 0.50$V			20	pF	
h_{fe}	$I_C = 20$ mA, $V_{CE} = 20$V, f = 100 MHz	1.5	2.5			
NF (scot)	$I_C = 100\ \mu$A, $V_{CE} = 10$V, $R_S = 1$k f = 1 kHz		1.5		dB	
h_{FE}	$I_C = 1$ mA, $V_{CE} = 10$V	50				
h_{FE}	$I_C = 10$ mA, $V_{CE} = 10$V	50				
h_{FE}	$I_C = 150$ mA, $V_{CE} = 10$V	50	150	400		
h_{FE}	$I_C = 500$ mA, $V_{CE} = 10$V	30				
$V_{CE(SAT)}$	$I_C = 150$ mA, $I_B = 15$ mA			0.5	V	
$V_{CE(SAT)}$	$I_C = 500$ mA, $I_B = 50$ mA			1.2	V	
$V_{BE(SAT)}$	$I_C = 150$ mA, $I_B = 15$ mA			1.3	V	
$V_{BE(SAT)}$	$I_C = 500$ mA, $I_B = 50$ mA			1.6	V	
BV_{CEO}	$I_C = 10$ mA	35			V	
BV_{CBO}	$I_C = 100\ \mu$A	50			V	
BV_{EBO}	$I_E = 10\ \mu$A	6			V	
I_{CBO}	$V_{CB} = 35$V			100	nA	
I_{EBO}	$V_{EB} = 4$V			100	nA	

找PDF 维库一下 pdf.dzsc.com

Process 6

DC Pulsed Current Gain vs Collector Current

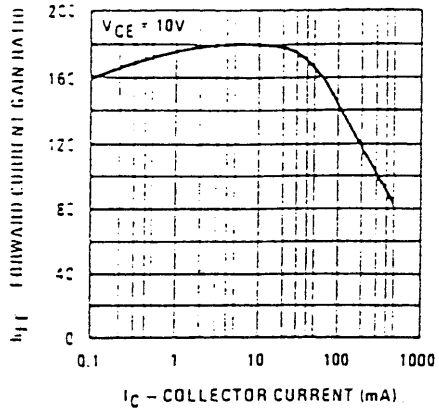

Base-Emitter ON Voltage vs Collector Current

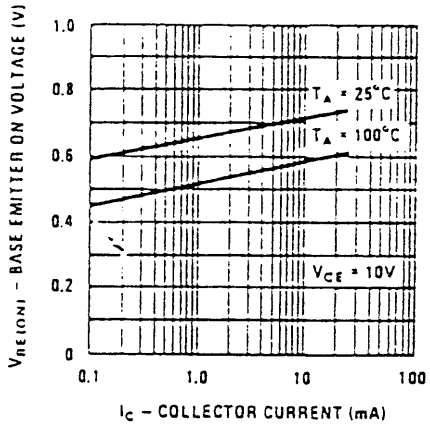

Maximum Power Dissipation vs Ambient Temperature

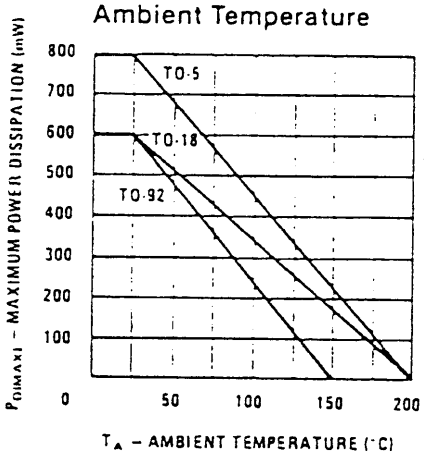

Maximum Power Dissipation vs Case Temperature

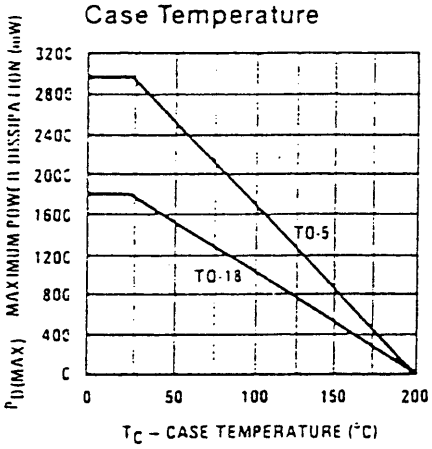

Collector Reverse Current vs Reverse Bias Voltage

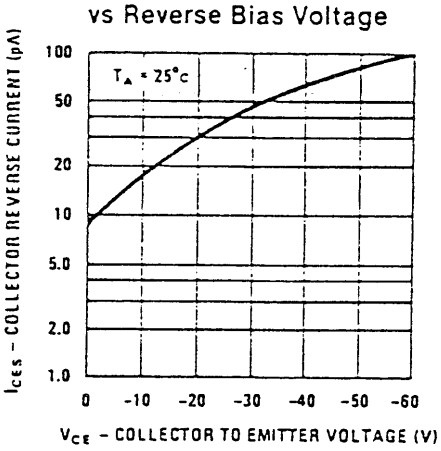

Pulsed Collector Saturation Voltage vs Collector Current

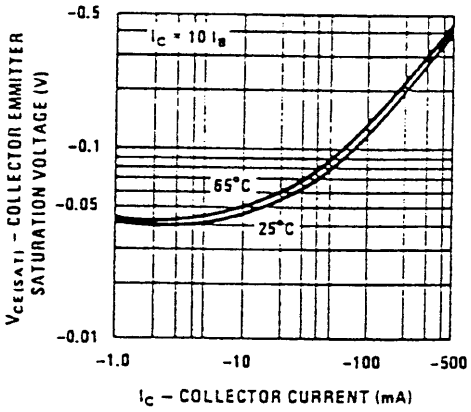

Pulsed Base Saturation Voltage vs Collector Current

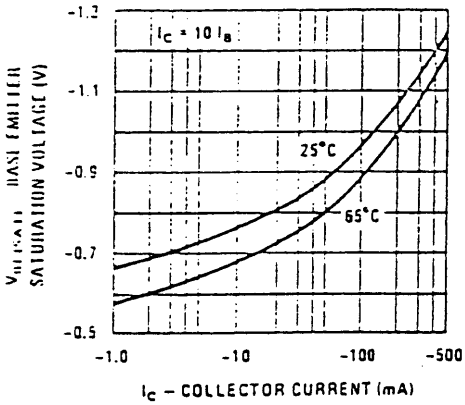

Input and Output Capacitances vs Reverse Bias Voltage

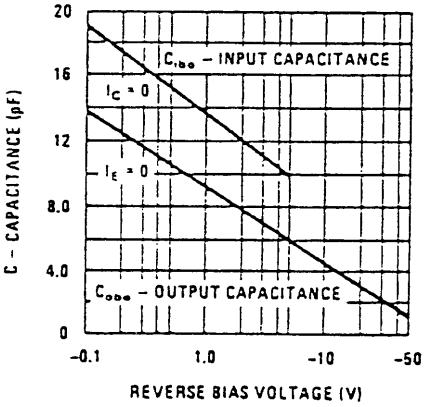

Contours of Constant Gain Bandwidth Product (f_T)

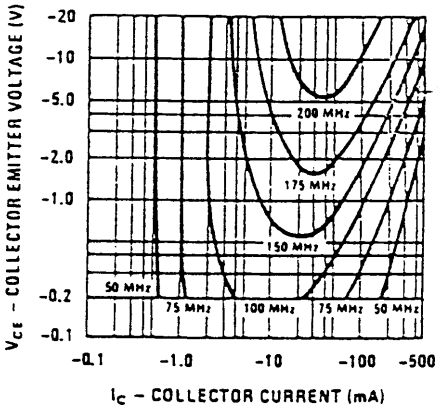

Switching Times vs Collector Current

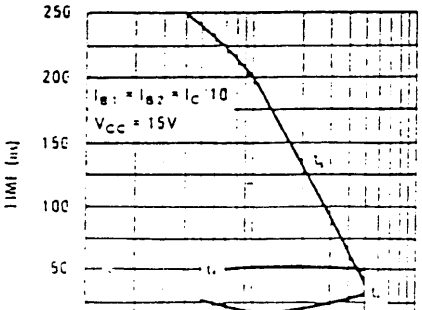

Turn On and Turn Off Times vs Collector Current

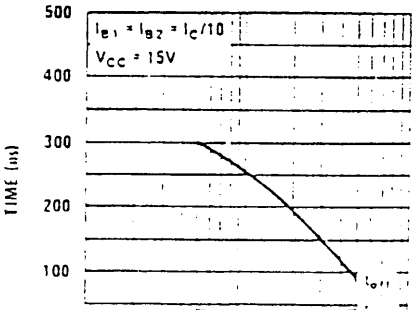

Rise Time vs Collector and Turn On Base Currents

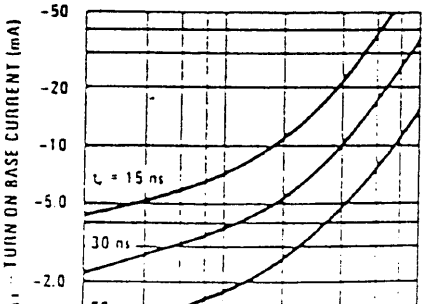

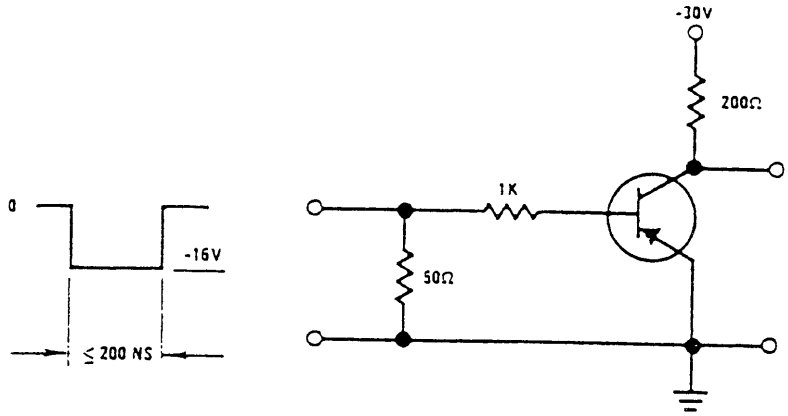

FIGURE 1. Saturated Turn On Switching Time Test Circuit

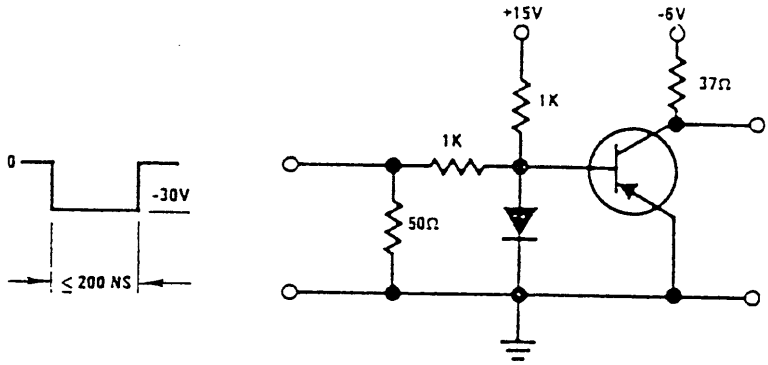

FIGURE 2. Saturated Turn Off Switching Time Test Circuit

SMALL SIGNAL CHARACTERISTICS (f = 1.0 kHz)

Symbol	Characteristic	Min	Typ	Max	Units	Conditions
h_{ie}	Input Resistance		480	2000	Ω	$I_C = 10$ mA, $V_{CE} = -10$
h_{oe}	Output Conductance		80	1200	μmhos	$I_C = 10$ mA, $V_{CE} = -10$
h_{re}	Voltage Feedback Ratio		162	1500	$x10^{-6}$	$I_C = 10$ mA. $V_{CE} = -10$
h_{fe}	Small Signal Current Gain	100				$I_C = 10$ mA. $V_{CE} = -10$

TYPICAL COMMON EMITTER CHARACTERISTICS (f = 1.0 kHz)

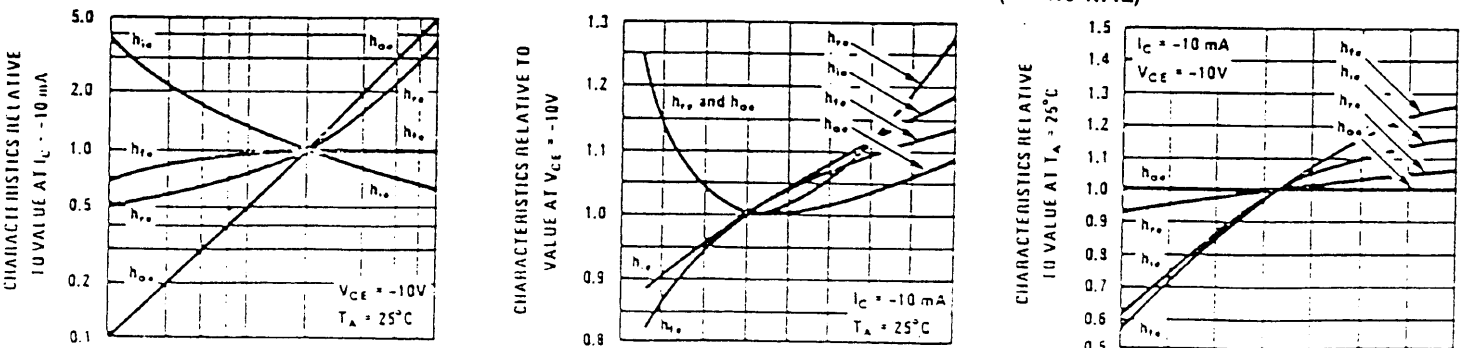

PRO ELECTRON SERIES (Continued)

BC214

Type No.	Case Style	V_{CES}* V_{CBO} (V) Min	V_{CEO} (V) Min	V_{EBO} (V) Min	I_{CES}* I_{CBO} (nA) Max	@ V_{CB} (V)	H_{FE} h_{fe} 1 kHz* Min	Max	@ I_C (mA)	& V_{CE} (V)	$V_{CE(SAT)}$ (V) Max	& $V_{BE(SAT)}$ $V_{BE(ON)}$* (V) Min	Max	@ I_C (mA)	C_{ob} (pF) Max	f_T (MHz) Min	Max	@ I_C (mA)	t_{off} (ns) Max	NF (dB) Max	Test Conditions
BC213LB	TO-92 (94)	45	30	5	15	30	40		0.01	5	0.6		1.1	100	10	200		10		10	1
							80		2	5	0.25			10							
							200	400*	2	5		0.6	0.72*	2							
BC213LC	TO-92 (94)	45	30	5	15	30	40		0.01	5	0.6		1.1	100	10	200		10		10	1
							80		2	5	0.25			10							
							350	600*	2	5		0.6	0.72*	2							
BC214	TO-92 (97)	45	30	5	15	30	40		0.01	5	0.6		1.1	100	10	200		10		2	1
							80		2	5	0.25			10							
							140	600*	2	5		0.6	0.72*	2							
BC214A	TO-92 (97)	45	30	5	15	30	40		0.01	5	0.6		1.1	100	10	200		10		2	1
							80		2	5	0.25			10							
							100	300*	2	5		0.6	0.72*	2							
BC214B	TO-92 (97)	45	30	5	15	30	40		0.01	5	0.6		1.1	100	10	200		10		2	1
							80		2	5	0.25			10							
							200	400*	2	5		0.6	0.72*	2							
BC214C	TO-92 (97)	45	30	5	15	30	40		0.01	5	0.6		1.1	100	10	200		10		2	1
							80		2	5	0.25			10							
							350	600*	2	5		0.6	0.72*	2							
BC214L	TO-92 (94)	45	30	5	15	30	100		0.01	5	0.6		1.1	100	10	200		10		2	1
							140	400	2	5	0.25			10							
							120		100	5		0.6	0.72*	2							
							140*		2	5											
BC214LB	TO-92 (94)	45	30	5	15	30	100		0.01	5	0.6		1.1	100	10	200		10		2	1
							140		2	5	0.25			10							
							120		100	5		0.6	0.72*	2							
							200	400*	2	5											
BC214LC	TO-92 (94)	45	30	5	15	30	100		0.01	5	0.6		1.1	100	10	200		10		2	1
							140		2	5	0.25			10							
							120		100	5		0.6	0.72*	2							
							350	600*	2	5											
C237-92	TO-92 (97)	50	45	6	50	20	100		0.01	5	0.25		0.77*	10	4.5					10	1
							140		2	5			0.6	100							
							120		100	5											
							125	500*	2	5		0.55	0.70*	2							
C237A-92	TO-92 (97)	50	45	6	50	20	100		0.01	5	0.25		0.77*	10	4.5					10	1
							140		2	5			0.6	100							
							120		100	5											
							125	500*	2	5		0.55	0.70*	2							

General Purpose Amplifiers and Switches (continued)

$V_{CEO(sust)}$ (Volts) Min	Devices NPN	Devices PNP	I_C (mA) Max	h_{FE} @ I_C Min	h_{FE} @ I_C Max	h_{FE} @ I_C mA	f_T @ I_C (MHz) Min	f_T @ I_C mA	NF (dB) Max	Package	$P_{D(Amb)}$ (mW) @25°C
60		2N4032	1000	100	300	100	150	50		TO-39	800
		2N6554	1500	80	300	50	75	50		TO-202(55)	1333
		MMBT2907A	600	100	300	150	200	50		TO-236*	350
		PN2907A	600	100	300	150	200	50		TO-92(92)	625
		PN3645	500	100	300	150	200	20		TO-92(92)	625
		PN4249	100	100	300	0.1	40	0.5	3.0	TO-92(92)	625
		PN4250A	100	250	700	0.1	40	0.5	2.0	TO-92(92)	625
		PN4355	500	100	400	10	100	50		TO-92(92)	625
		TN2905A	600	100	300	150	200	50		TO-237(91)	850
50	2N3416		500	75	225	2.0				TO-92(94)	360
	2N3417		500	180	540	2.0				TO-92(94)	360
	2N956		1000	50	200	150	70	50		TO-18	500
	BC182		100	125	500	2.0	150	10	10	TO-92(97)	625
		2N5323	2000	40	250	500	50	50		TO-39	
		BC212	100	60	400	2.0	200	10	10	TO-92(97)	625
45	2N2270		1000	50	200	150	100	50		TO-39	1000
	2N5962		50	600	1400	10	100	10	3.0	TO-18	400
	2N930		200	100	300	0.01	150	5		TO-18	300
	BC237	BC307	100	120	460	2.0	150	10	10	TO-92(97)	625
	BC337	BC327	1000	100	600	100				TO-92(97)	625
	BC547		100	110	800	2.0	300 Typ	10	10	TO-92(97)	625

* TO-236AB is standard for all devices.
Please refer to Surface Mount section for TO-236 Device Marking.

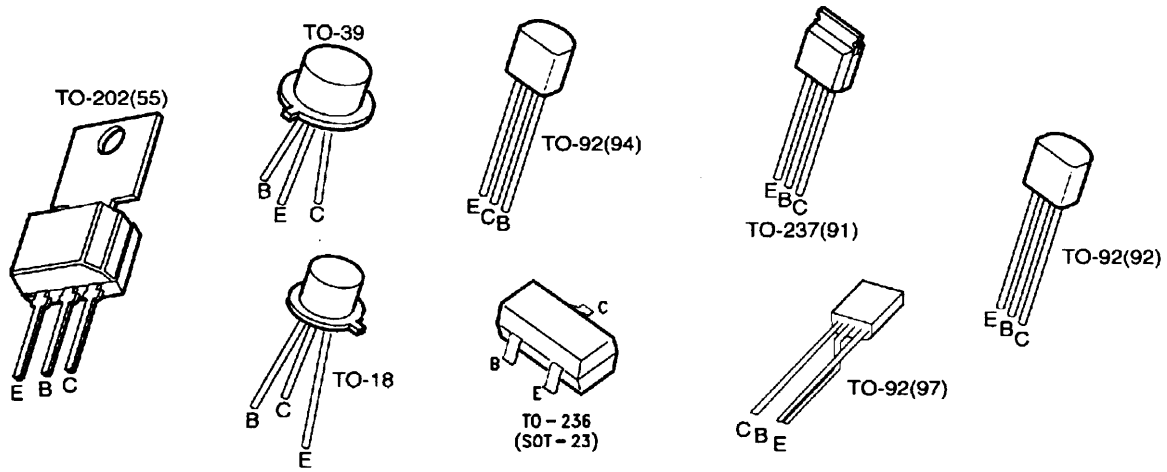

This Material Copyrighted By Its Respective Manufacturer