查询ADSP-BF561SKBCZ600供应商 捷多邦，专业PCB打样工厂，24小时加急出货

Blackfin® Embedded Symmetric Multi-Processor

Preliminary Technical Data

ADSP-BF561

FEATURES

- Dual Symmetric 600 Mhz High Performance Blackfin Core
- 328 KBytes of On-chip Memory (See Memory Info on Page 3)
- Each Blackfin Core Includes:
  - Two 16-Bit MACs, Two 40-Bit ALUs, Four 8-Bit Video ALUs, 40-Bit Shifter
- RISC-Like Register and Instruction Model for Ease of Programming and Compiler-Friendly Support
- Advanced Debug, Trace, and Performance- Monitoring
- 0.8 - 1.2V core V_{DD} with On-Chip Voltage Regulation
- 3.3V and 2.5V Tolerant I/O
- 256-Ball Mini BGA and 297-Ball PBGA Package Options

PERIPHERALS

- Two Parallel Input/Output Peripheral Interface Units Supporting ITU-R 656 Video and Glueless Interface to ADI Analog Front End ADCs
- Two Dual Channel, Full Duplex Synchronous Serial Ports Supporting Eight Stereo I^2S Channels
- Dual 16 Channel DMA Controllers and one internal memory DMA controller
- 12 General Purpose 32-bit Timer/Counters, with PWM Capability
- SPI-Compatible Port
- UART with Support for IrDA®
- Dual Watchdog Timers
- 48 Programable Flags
- On-Chip Phase Locked Loop Capable of 1x to 63x Frequency Multiplication

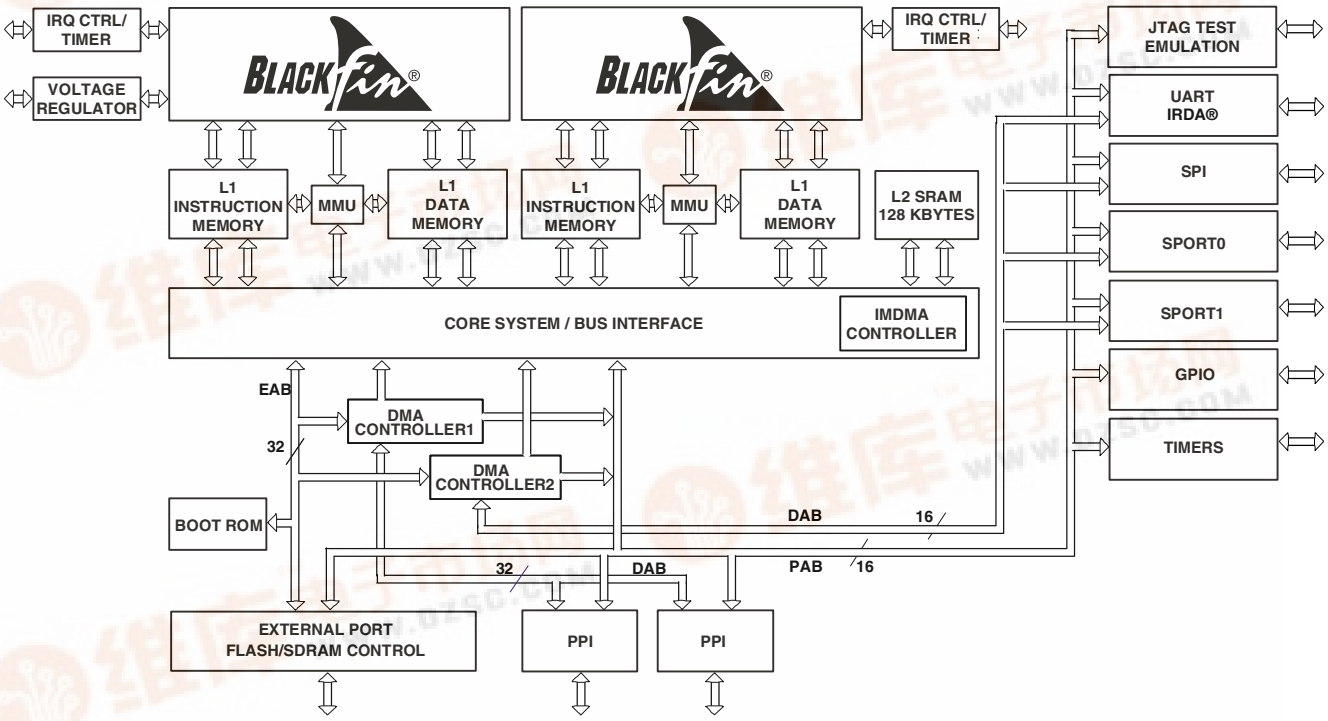

Figure 1. Functional Block Diagram

Blackfin and the Blackfin logo are registered trademarks of Analog Devices, Inc.

Rev. PrC

Information furnished by Analog Devices is believed to be accurate and reliable. However, no responsibility is assumed by Analog Devices for its use, nor for any infringements of patents or other rights of third parties that may result from its use. Specifications subject to change without notice. No license is granted by implication or otherwise under any patent or patent rights of Analog Devices. Trademarks and registered trademarks are the property of their respective owners.

One Technology Way, P.O.Box 9106, Norwood, MA 02062-9106 U.S.A.
Tel:781/329-4700 www.analog.com
Fax:781/326-8703 © 2004 Analog Devices, Inc. All rights reserved.

TABLE OF CONTENTS

General Description 3
Portable Low-Power Architecture 3
Blackfin Processor Core 3
Memory Architecture 4
Internal (On-chip) Memory 4
External (Off-Chip) Memory 5
I/O Memory Space 6
Booting 6
Event Handling 6
Core Event Controller (CEC) 6
System Interrupt Controller (SIC) 6
Event Control 7
DMA Controllers 8
WatchDog Timers 8
Serial Ports (SPORTs) 9
Serial Peripheral Interface (SPI) Ports 9
UART Port 9
Programmable Flags (PFx) 10
Timers 10
Parallel Peripheral Interface 10
General Purpose Mode Descriptions 10
Input Mode 10
ITU -R 656 Mode Descriptions 10
Active Video Only Mode 10
Vertical Blanking Interval Mode 11
Entire Field Mode 11
Dynamic Power Management 11
Full-On Operating Mode – Maximum Performance . 11
Active Operating Mode – Moderate Power Savings .. 11
Hibernate Operating Mode—Maximum Static Power Savings 11
Sleep Operating Mode – High Power Savings 11
Deep Sleep Operating Mode – Max. Power Savings .. 11
Power Savings 12
Voltage Regulation 12
Clock Signals 13
Booting Modes 13
Instruction Set Description 14
Development Tools 14
Designing an Emulator-Compatible Processor Board (Target) 15
Additional Information 15
Pin Descriptions 16
Specifications 20
Recommended Operating Conditions 20
Electrical Characteristics 20
Absolute Maximum Ratings 21
ESD Sensitivity 21
Timing Specifications 22
Clock and Reset Timing 23
Asynchronous Memory Read Cycle Timing 24
Asynchronous Memory Write Cycle Timing 25
SDRAM Interface Timing 26
External Port Bus Request and Grant Cycle Timing .. 27
Parallel Peripheral Interface Timing 28
Serial Ports 29
Serial Peripheral Interface (SPI) Port—Master Timing 34
Serial Peripheral Interface (SPI) Port—Slave Timing . 36
Universal Asynchronous Receiver-Transmitter (UART) Port—Receive and Transmit Timing 38
Timer Cycle Timing 39
Programmable Flags Cycle Timing 40
JTAG Test And Emulation Port Timing 41
Power Dissipation 42
Output Drive Currents 42
Test Conditions 42
Output Enable Time 43
Output Disable Time 43
Example System Hold Time Calculation 43
Capacitive Loading 44
256-ball MBGA Pin Configurations 45
297-ball PBGA Pin Configurations 47
Outline Dimensions 50
Outline Dimensions 51
Ordering Guide 51

REVISION HISTORY

Revision PrC:

- Edits made to pinlists and timing specification.

GENERAL DESCRIPTION

The ADSP-BF561 processor is a high-performance member of the Blackfin family of products targeting a variety of multimedia and telecommunications applications. At the heart of this device are two independent Analog Devices Blackfin processors. These Blackfin processors combine a dual-MAC state-of-the-art signal processing engine, the advantage of a clean, orthogonal RISC-like microprocessor instruction set, and single-instruction, multiple-data (SIMD) multimedia capabilities into a single instruction-set architecture. The ADSP-BF561 device integrates a general purpose set of digital imaging peripherals creating a complete system on-chip solution for digital imaging and multimedia applications.

The ADSP-BF561 processor has 328 KBytes of on-chip memory. Each Blackfin core includes:

- 16K Bytes of Instruction SRAM/Cache
- 16K Bytes of Instruction SRAM
- 32K Bytes of Data SRAM/Cache
- 32K Bytes of Data SRAM
- 4K Bytes of Scratchpad SRAM

Additional on-chip memory peripherals include:

- 128 KBytes of Low Latency On-chip SRAM
- Four Channel Internal Memory DMA Controller
- External Memory controller with glueless support for SDRAM, SRAM, and Flash

PORTABLE LOW-POWER ARCHITECTURE

Blackfin processors provide world-class power management and performance for embedded signal processing applications. Blackfin processors are designed in a low power and low voltage design methodology and feature Dynamic Power Management. Dynamic Power Management is the ability to vary both the voltage and frequency of operation to significantly lower the overall power dissipation. This translates into an exponential reduction in power dissipation providing longer battery life to portable applications.

BLACKFIN PROCESSOR CORE

As shown in Figure 2, each Blackfin core contains two multiplier/accumulators (MACs), two 40-bit ALUs, four video ALUs, and a single shifter. The computational units process 8-bit, 16-bit, or 32-bit data from the register file.

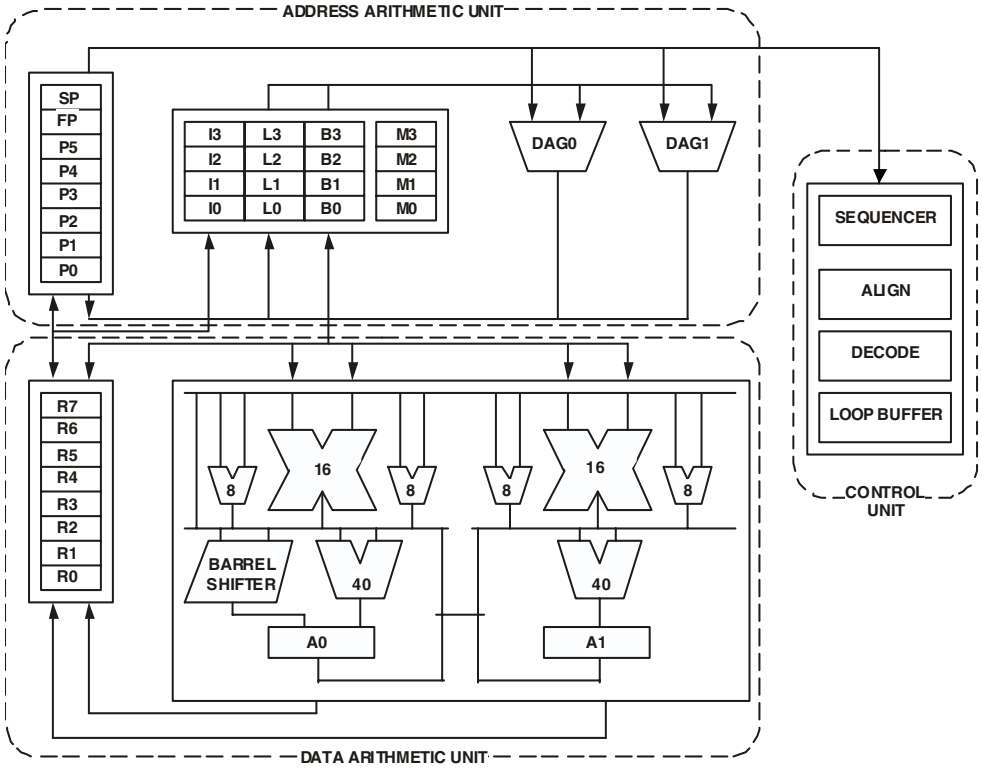

Figure 2. Blackfin Processor Core

Each MAC performs a 16-bit by 16-bit multiply in every cycle, with an accumulation to a 40-bit result, providing 8 bits of extended precision. The ALUs perform a standard set of arithmetic and logical operations. With two ALUs capable of operating on 16- or 32-bit data, the flexibility of the computation units covers the signal processing requirements of a varied set of application needs.

Each of the two 32-bit input registers can be regarded as two 16-bit halves, so each ALU can accomplish very flexible single 16-bit arithmetic operations. By viewing the registers as pairs of 16-bit operands, dual 16-bit or single 32-bit operations can be accomplished in a single cycle. By further taking advantage of the second ALU, quad 16-bit operations can be accomplished simply, accelerating the per cycle throughput.

The powerful 40-bit shifter has extensive capabilities for performing shifting, rotating, normalization, extraction, and depositing of data. The data for the computational units is found in a multi-ported register file of sixteen 16-bit entries or eight 32-bit entries.

A powerful program sequencer controls the flow of instruction execution, including instruction alignment and decoding. The sequencer supports conditional jumps and subroutine calls, as well as zero-overhead looping. A loop buffer stores instructions locally, eliminating instruction memory accesses for tight looped code.

Two data address generators (DAGs) provide addresses for simultaneous dual operand fetches from memory. The DAGs share a register file containing four sets of 32-bit Index, Modify, Length, and Base registers. Eight additional 32-bit registers provide pointers for general indexing of variables and stack locations.

Blackfin processors support a modified Harvard architecture in combination with a hierarchical memory structure. Level 1 (L1) memories are those that typically operate at the full processor speed with little or no latency. Level 2 (L2) memories are other memories, on-chip or off-chip, that may take multiple processor cycles to access. At the L1 level, the instruction memory holds instructions only. The two data memories hold data, and a dedicated scratchpad data memory stores stack and local variable information. At the L2 level, there is a single unified memory space, holding both instructions and data.

In addition, half of L1 instruction memory and half of L1 data memories may be configured as either Static RAMs (SRAMs) or caches. The Memory Management Unit (MMU) provides memory protection for individual tasks that may be operating on the core and may protect system registers from unintended access.

The architecture provides three modes of operation: User mode, Supervisor mode, and Emulation mode. User mode has restricted access to certain system resources, thus providing a protected software environment, while supervisor mode has unrestricted access to the system and core resources.

The Blackfin instruction set has been optimized so that 16-bit op-codes represent the most frequently used instructions, resulting in excellent compiled code density. Complex DSP instructions are encoded into 32-bit op-codes, representing fully featured multifunction instructions. Blackfin processors support a limited multi-issue capability, where a 32-bit instruction can be issued in parallel with two 16-bit instructions, allowing the programmer to use many of the core resources in a single instruction cycle.

The Blackfin assembly language uses an algebraic syntax for ease of coding and readability. The architecture has been optimized for use in conjunction with the VisualDSP C/C++ compiler, resulting in fast and efficient software implementations.

MEMORY ARCHITECTURE

The ADSP-BF561 views memory as a single unified 4G-byte address space, using 32-bit addresses. All resources including internal memory, external memory, and I/O control registers occupy separate sections of this common address space. The memory portions of this address space are arranged in a hierarchical structure to provide a good cost/performance balance of some very fast, low-latency memory as cache or SRAM very close to the processor, and larger, lower-cost and performance-memory systems farther away from the processor. The ADSP-BF561 memory map is shown in Figure 3.

The L1 memory system in each core is the highest-performance memory available to each Blackfin core. The L2 memory provides additional capacity with lower performance. Lastly, the off-chip memory system, accessed through the External Bus Interface Unit (EBIU), provides expansion with SDRAM, flash memory, and SRAM, optionally accessing more than 768M bytes of physical memory. The memory DMA controllers provide high-bandwidth data-movement capability. They can perform block transfers of code or data between the internal L1/L2 memories and the external memory spaces.

Internal (On-chip) Memory

The ADSP-BF561 has four blocks of on-chip memory providing high-bandwidth access to the core.

The first is the L1 instruction memory of each Blackfin core consisting of 16K bytes of 4-way set-associative cache memory and 16K bytes of SRAM. The cache memory may also be configured as an SRAM. This memory is accessed at full processor speed. When configured as SRAM, each of the two 16K banks of memory is broken into 4K sub-banks which can be independently accessed by the processor and DMA.

The second on-chip memory block is the L1 data memory of each Blackfin core which consists of four banks of 16K bytes each. Two of the L1 data memory banks can be configured as one way of a two-way set associative cache or as an SRAM. The other two banks are configured as SRAM. All banks are accessed at full processor speed. When configured as SRAM, each of the four 16K banks of memory is broken into 4K sub-banks which can be independently accessed by the processor and DMA.

The third memory block associated with each core is a 4K-byte scratchpad SRAM which runs at the same speed as the L1 memories, but is only accessible as data SRAM (it cannot be configured as cache memory and is not accessible via DMA).

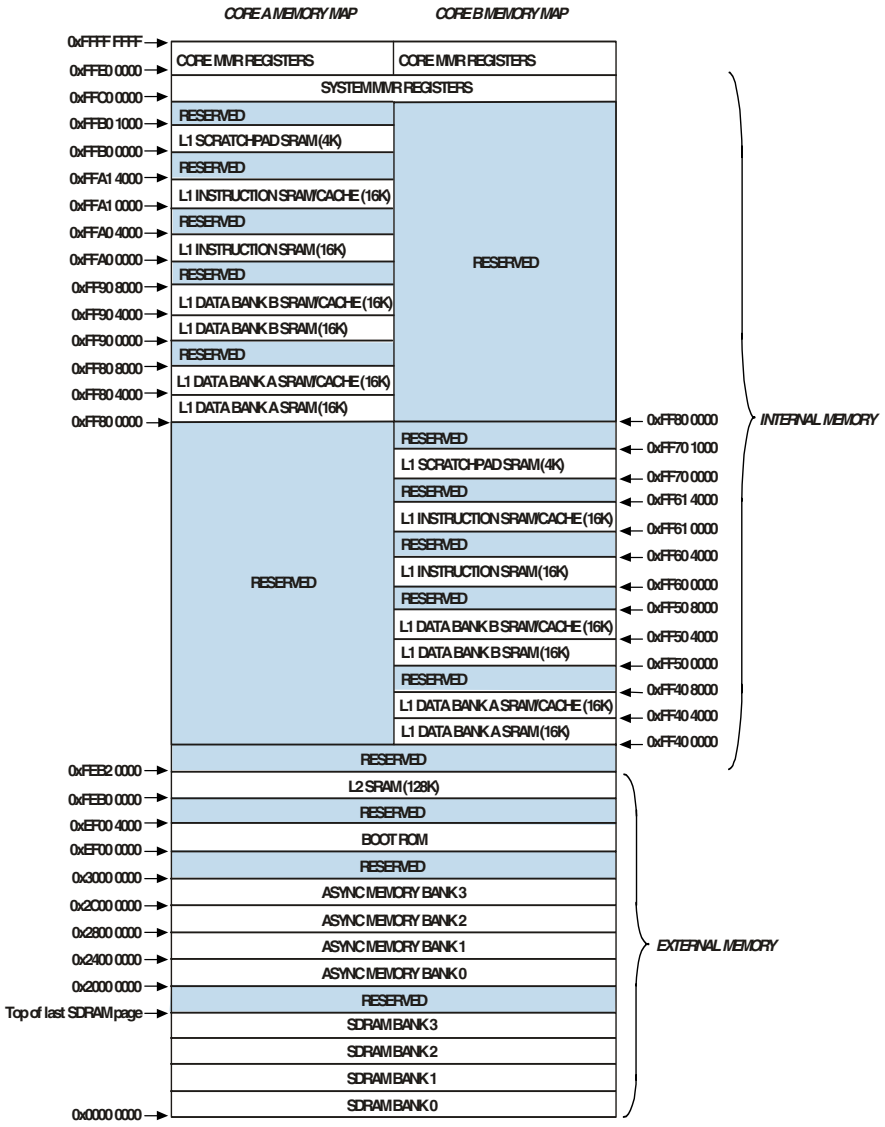

Figure 3. Memory Map

The fourth on-chip memory system is the L2 SRAM memory array which provides 128K bytes of high speed SRAM operating at one half the bandwidth of the core, and slightly longer latency than the L1 memory banks. The L2 memory is a unified instruction and data memory and can hold any mixture of code and data required by the system design. The Blackfin cores share a dedicated low-latency 64-bit wide data path port into the L2 SRAM memory.

Each Blackfin core processor has its own set of core Memory Mapped Registers (MMRs) but share the same system MMR registers and 128 KB L2 SRAM memory.

External (Off-Chip) Memory

The ADSP-BF561 external memory is accessed via the External Bus Interface Unit (EBIU). This interface provides a glueless connection to up to four banks of synchronous DRAM (SDRAM) as well as up to four banks of asynchronous memory devices including flash, EPROM, ROM, SRAM, and memory mapped I/O devices.

The PC133-compliant SDRAM controller can be programmed to interface to up to four banks of SDRAM, with each bank containing between 16M bytes and 128M bytes providing access to up to 512M bytes of SDRAM. Each bank is independently programmable and is contiguous with adjacent banks regardless of the sizes of the different banks or their placement. This allows flexible configuration and upgradability of system memory while allowing the core to view all SDRAM as a single, contiguous, physical address space.

The asynchronous memory controller can also be programmed to control up to four banks of devices with very flexible timing parameters for a wide variety of devices. Each bank occupies a

64M-byte segment regardless of the size of the devices used so that these banks will only be contiguous if fully populated with 64M bytes of memory.

I/O Memory Space

Blackfin processors do not define a separate I/O space. All resources are mapped through the flat 32-bit address space. On-chip I/O devices have their control registers mapped into memory-mapped registers (MMRs) at addresses near the top of the 4G-byte address space. These are separated into two smaller blocks, one which contains the control MMRs for all core functions, and the other which contains the registers needed for setup and control of the on-chip peripherals outside of the core. The core MMRs are accessible only by the core and only in supervisor mode and appear as reserved space by on-chip peripherals. The system MMRs are accessible by the core in supervisor mode and can be mapped as either visible or reserved to other devices, depending on the system protection model desired.

Booting

The ADSP-BF561 contains a small boot kernel, which configures the appropriate peripheral for booting. If the ADSP-BF561 is configured to boot from boot ROM memory space, the processor starts executing from the on-chip boot ROM.

Event Handling

The event controller on the ADSP-BF561 handles all asynchronous and synchronous events to the processor. The ADSP-BF561 provides event handling that supports both nesting and prioritization. Nesting allows multiple event service routines to be active simultaneously. Prioritization ensures that servicing of a higher-priority event takes precedence over servicing of a lower-priority event. The controller provides support for five different types of events:

- Emulation – An emulation event causes the processor to enter emulation mode, allowing command and control of the processor via the JTAG interface.
- Reset – This event resets the processor.
- Non-Maskable Interrupt (NMI) – The NMI event can be generated by the software watchdog timer or by the NMI input signal to the processor. The NMI event is frequently used as a power-down indicator to initiate an orderly shut down of the system.
- Exceptions – Events that occur synchronously to program flow, i.e., the exception will be taken before the instruction is allowed to complete. Conditions such as data alignment violations, undefined instructions, etc. cause exceptions.
- Interrupts – Events that occur asynchronously to program flow. They are caused by timers, peripherals, input pins, and an explicit software instruction.

Each event has an associated register to hold the return address and an associated return-from-event instruction. When an event is triggered, the state of the processor is saved on the supervisor stack.

The ADSP-BF561 event controller consists of two stages, the Core Event Controller (CEC) and the System Interrupt Controller (SIC). The Core Event Controller works with the System Interrupt Controller to prioritize and control all system events. Conceptually, interrupts from the peripherals enter into the SIC, and are then routed directly into the general-purpose interrupts of the CEC.

Core Event Controller (CEC)

The CEC supports nine general-purpose interrupts (IVG15–7), in addition to the dedicated interrupt and exception events. Of these general-purpose interrupts, the two lowest-priority interrupts (IVG15–14) are recommended to be reserved for software interrupt handlers, leaving seven prioritized interrupt inputs to support the peripherals of the ADSP-BF561. Table 1 describes the inputs to the CEC, identifies their names in the Event Vector Table (EVT), and lists their priorities.

Table 1. Core Event Controller (CEC)

Priority (0 is Highest)	Event Class	EVT Entry
0	Emulation/Test	EMU
1	Reset	RST
2	Non-Maskable	NMI
3	Exceptions	EVX
4	Global Enable	-
5	Hardware Error	IVHW
6	Core Timer	IVTMR
7	General Interrupt 7	IVG7
8	General Interrupt 8	IVG8
9	General Interrupt 9	IVG9
10	General Interrupt 10	IVG10
11	General Interrupt 11	IVG11
12	General Interrupt 12	IVG12
13	General Interrupt 13	IVG13
14	General Interrupt 14	IVG14
15	General Interrupt 15	IVG15

System Interrupt Controller (SIC)

The System Interrupt Controller provides the mapping and routing of events from the many peripheral interrupt sources, to the prioritized general-purpose interrupt inputs of the CEC. Although the ADSP-BF561 provides a default mapping, the user can alter the mappings and priorities of interrupt events by writing the appropriate values into the Interrupt Assignment Registers (IAR). Table 2 describes the inputs into the SIC and the default mappings into the CEC.

Table 2. Peripheral Interrupt Source Reset State

Peripheral Interrupt Source	Chan[1]	IVG[2]
PLL wakeup	0	IVG07
DMA1 Error	1	IVG07
DMA2 Error	2	IVG07
IMDMA Error	3	IVG07
PPI1 Error	4	IVG07
PPI2 Error	5	IVG07
SPORT0 Error	6	IVG07
SPORT1 Error	7	IVG07
SPI Error	8	IVG07
UART Error	9	IVG07
Reserved	10	IVG07
DMA1 0 interrupt	11	IVG08
DMA1 1 interrupt	12	IVG08
DMA1 2 interrupt	13	IVG08
DMA1 3 interrupt	14	IVG08
DMA1 4 interrupt	15	IVG08
DMA1 5 interrupt	16	IVG08
DMA1 6 interrupt	17	IVG08
DMA1 7 interrupt	18	IVG08
DMA1 8 interrupt	19	IVG08
DMA1 9 interrupt	20	IVG08
DMA1 10 interrupt	21	IVG08
DMA1 11 interrupt	22	IVG08
DMA2 0 interrupt	23	IVG09
DMA2 1 interrupt	24	IVG09
DMA2 2 interrupt	25	IVG09
DMA2 3 interrupt	26	IVG09
DMA2 4 interrupt	27	IVG09
DMA2 5 interrupt	28	IVG09
DMA2 6 interrupt	29	IVG09
DMA2 7 interrupt	30	IVG09
DMA2 8 interrupt	31	IVG09
DMA2 9 interrupt	32	IVG09
DMA2 10 interrupt	33	IVG09
DMA2 11 interrupt	34	IVG09
Timer0 interrupt	35	IVG10
Timer1 interrupt	36	IVG10
Timer2 interrupt	37	IVG10
Timer3 interrupt	38	IVG10
Timer4 interrupt	39	IVG10
Timer5 interrupt	40	IVG10
Timer6 interrupt	41	IVG10
Timer7 interrupt	42	IVG10
Timer8 interrupt	43	IVG10
Timer9 interrupt	44	IVG10
Timer10 interrupt	45	IVG10

Table 2. Peripheral Interrupt Source Reset State (Continued)

Peripheral Interrupt Source	Chan[1]	IVG[2]
Timer11 interrupt	46	IVG10
FIO0 interrupt A	47	IVG11
FIO0 interrupt B	48	IVG11
FIO1 interrupt A	49	IVG11
FIO1 interrupt B	50	IVG11
FIO2 interrupt A	51	IVG11
FIO2 interrupt B	52	IVG11
DMA1 write/read 0 interrupt	53	IVG08
DMA1 write/read1 interrupt	54	IVG08
DMA2 write/read 0 interrupt	55	IVG09
DMA2 write/read 1 interrupt	56	IVG09
IMDMA write/read 0 interrupt	57	IVG12
IMDMA write/read 1 interrupt	58	IVG12
Watchdog Timer	59	IVG13
Reserved	60	IVG07
Reserved	61	IVG07
Supplemental 0	62	IVG07
Supplemental 1	63	IVG07

[1] Peripheral Interrupt Channel Number
[2] Default User IVG Interrupt

Event Control

The ADSP-BF561 provides the user with a very flexible mechanism to control the processing of events. In the CEC, three registers are used to coordinate and control events. Each of the registers, as follows, is 16-bits wide, while each bit represents a particular event class:

- CEC Interrupt Latch Register (ILAT) – The ILAT register indicates when events have been latched. The appropriate bit is set when the processor has latched the event and cleared when the event has been accepted into the system. This register is updated automatically by the controller, but may be written only when its corresponding IMASK bit is cleared.
- CEC Interrupt Mask Register (IMASK) – The IMASK register controls the masking and unmasking of individual events. When a bit is set in the IMASK register, that event is unmasked and will be processed by the CEC when asserted. A cleared bit in the IMASK register masks the event thereby preventing the processor from servicing the event even though the event may be latched in the ILAT register. This register may be read from or written to while in supervisor mode. (Note that general-purpose interrupts can be globally enabled and disabled with the STI and CLI instructions, respectively.)
- CEC Interrupt Pending Register (IPEND) – The IPEND register keeps track of all nested events. A set bit in the IPEND register indicates the event is currently active or nested at some level. This register is updated automatically by the controller but may be read while in supervisor mode.

The SIC allows further control of event processing by providing six 32-bit interrupt control and status registers. Each register contains a bit corresponding to each of the peripheral interrupt events shown in Table 2.

- SIC Interrupt Mask Register (SIC_IMASK0, SIC_IMASK1) – This register controls the masking and unmasking of each peripheral interrupt event. When a bit is set in the register, that peripheral event is unmasked and will be processed by the system when asserted. A cleared bit in the register masks the peripheral event thereby preventing the processor from servicing the event.
- SIC Interrupt Status Register (SIC_ISTAT0, SIC_ISTAT1) – As multiple peripherals can be mapped to a single event, this register allows the software to determine which peripheral event source triggered the interrupt. A set bit indicates the peripheral is asserting the interrupt, a cleared bit indicates the peripheral is not asserting the event.
- SIC Interrupt Wakeup Enable Register (SIC_IWR0, SIC_IWR1)– By enabling the corresponding bit in this register, each peripheral can be configured to wake up the processor, should the processor be in a powered down mode when the event is generated. (For more information, see Dynamic Power Management on Page 11.)

Because multiple interrupt sources can map to a single general-purpose interrupt, multiple pulse assertions can occur simultaneously, before or during interrupt processing for an interrupt event already detected on this interrupt input. The IPEND register contents are monitored by the SIC as the interrupt acknowledgement.

The appropriate ILAT register bit is set when an interrupt rising edge is detected (detection requires two core clock cycles). The bit is cleared when the respective IPEND register bit is set. The IPEND bit indicates that the event has entered into the processor pipeline. At this point the CEC will recognize and queue the next rising edge event on the corresponding event input. The minimum latency from the rising edge transition of the general-purpose interrupt to the IPEND output asserted is three core clock cycles; however, the latency can be much higher, depending on the activity within and the mode of the processor.

DMA CONTROLLERS

The ADSP-BF561 has multiple, independent DMA controllers that support automated data transfers with minimal overhead for the DSP core. DMA transfers can occur between the ADSP-BF561's internal memories and any of its DMA-capable peripherals. Additionally, DMA transfers can be accomplished between any of the DMA-capable peripherals and external devices connected to the external memory interfaces, including the SDRAM controller and the asynchronous memory controller. DMA-capable peripherals include the SPORTs, SPI port, UART, and PPI. Each individual DMA-capable peripheral has at least one dedicated DMA channel.

The ADSP-BF561 DMA controllers support both 1-dimensional (1D) and 2-dimensional (2D) DMA transfers. DMA transfer initialization can be implemented from registers or from sets of parameters called descriptor blocks.

The 2D DMA capability supports arbitrary row and column sizes up to 64K elements by 64K elements, and arbitrary row and column step sizes up to +/- 32K elements. Furthermore, the column step size can be less than the row step size, allowing implementation of interleaved data streams. This feature is especially useful in video applications where data can be de-interleaved on the fly.

Examples of DMA types supported by the ADSP-BF561 DMA controllers include:

- A single, linear buffer that stops upon completion
- A circular, auto-refreshing buffer that interrupts on each full or fractionally full buffer
- 1-D or 2-D DMA using a linked list of descriptors
- 2-D DMA using an array of descriptors, specifying only the base DMA address within a common page

In addition to the dedicated peripheral DMA channels, each DMA Controller has four memory DMA channels provided for transfers between the various memories of the ADSP-BF561 system. These enable transfers of blocks of data between any of the memories—including external SDRAM, ROM, SRAM, and flash memory—with minimal processor intervention. Memory DMA transfers can be controlled by a very flexible descriptor-based methodology or by a standard register-based autobuffer mechanism.

Further, the ADSP-BF561 has a four channel Internal Memory DMA (IMDMA) Controller. The IMDMA Controller allows data transfers between any of the internal L1 and L2 memories.

WATCHDOG TIMERS

Each ADSP-BF561 core includes a 32-bit timer, which can be used to implement a software watchdog function. A software watchdog can improve system availability by forcing the processor to a known state, via generation of a hardware reset, non-maskable interrupt (NMI), or general- purpose interrupt, if the timer expires before being reset by software. The programmer initializes the count value of the timer, enables the appropriate interrupt, then enables the timer. Thereafter, the software must reload the counter before it counts to zero from the programmed value. This protects the system from remaining in an unknown state where software, which would normally reset the timer, has stopped running due to an external noise condition or software error.

After a reset, software can determine if the watchdog was the source of the hardware reset by interrogating a status bit in the timer control register, which is set only upon a watchdog generated reset.

The timer is clocked by the system clock (SCLK), at a maximum frequency of SCLK.

SERIAL PORTS (SPORTS)

The ADSP-BF561 incorporates two dual-channel synchronous serial ports (SPORT0 and SPORT1) for serial and multiprocessor communications. The SPORTs support the following features:

- I^2S capable operation.
- Bidirectional operation – Each SPORT has two sets of independent transmit and receive pins, enabling eight channels of I^2S stereo audio.
- Buffered (8-deep) transmit and receive ports – Each port has a data register for transferring data words to and from other DSP components and shift registers for shifting data in and out of the data registers.
- Clocking – Each transmit and receive port can either use an external serial clock or generate its own, in frequencies ranging from (f_{SCLK}/131,070) Hz to (f_{SCLK}/2) Hz.
- Word length – Each SPORT supports serial data words from 3 to 32 bits in length, transferred most-significant-bit first or least-significant-bit first.
- Framing – Each transmit and receive port can run with or without frame sync signals for each data word. Frame sync signals can be generated internally or externally, active high or low, and with either of two pulsewidths and early or late frame sync.
- Companding in hardware – Each SPORT can perform A-law or μ-law companding according to ITU recommendation G.711. Companding can be selected on the transmit and/or receive channel of the SPORT without additional latencies.
- DMA operations with single-cycle overhead – Each SPORT can automatically receive and transmit multiple buffers of memory data. The DSP can link or chain sequences of DMA transfers between a SPORT and memory.
- Interrupts – Each transmit and receive port generates an interrupt upon completing the transfer of a data word or after transferring an entire data buffer or buffers through DMA.
- Multichannel capability – Each SPORT supports 128 channels out of a 1024-channel window and is compatible with the H.100, H.110, MVIP-90, and HMVIP standards.

SERIAL PERIPHERAL INTERFACE (SPI) PORTS

The ADSP-BF561 has one SPI-compatible ports that enable the processor to communicate with multiple SPI-compatible devices.

The SPI interface uses three pins for transferring data: two data pins (Master Output-Slave Input, MOSIx, and Master Input-Slave Output, MISO) and a clock pin (Serial Clock, SCK). One SPI chip select input pin ($\overline{SPISS}$) let other SPI devices select the DSP, and seven SPI chip select output pins (SPISEL7–1) let the DSP select other SPI devices. The SPI select pins are reconfigured Programmable Flag pins. Using these pins, the SPI ports provide a full duplex, synchronous serial interface, which supports both master and slave modes and multimaster environments.

Each SPI port's baud rate and clock phase/polarities are programmable (see SPI Clock Rate equation), and each has an integrated DMA controller, configurable to support transmit or receive data streams. The SPI's DMA controller can only service unidirectional accesses at any given time.

$$SPI\ Clock\ Rate = \frac{f_{SCLK}}{2 \times SPIBAUD}$$

During transfers, the SPI ports simultaneously transmit and receive by serially shifting data in and out on their two serial data lines. The serial clock line synchronizes the shifting and sampling of data on the two serial data lines.

UART PORT

The ADSP-BF561 provides a full duplex Universal Asynchronous Receiver/Transmitter (UART) ports (UART0 and UART1) fully compatible with PC-standard UARTs. The UART ports provide a simplified UART interface to other peripherals or hosts, supporting full duplex, DMA supported, asynchronous transfers of serial data. Each UART port includes support for 5 to 8 data bits; 1 or 2 stop bits; and none, even, or odd parity. The UART ports support two modes of operation, as follows:

- PIO (Programmed I/O) – The processor sends or receives data by writing or reading I/O-mapped UATX or UARX registers, respectively. The data is double-buffered on both transmit and receive.
- DMA (Direct Memory Access) – The DMA controller transfers both transmit and receive data. This reduces the number and frequency of interrupts required to transfer data to and from memory. Each UART has two dedicated DMA channels, one for transmit and one for receive. These DMA channels have lower priority than most DMA channels because of their relatively low service rates.

Each UART port's baud rate (see UART Clock Rate equation), serial data format, error code generation and status, and interrupts are programmable. In the UART Clock Rate equation, the divisor (D) can be 1 to 65536.

$$UART\ Clock\ Rate = \frac{f_{SCLK}}{16 \times D}$$

The UART programmable features include:

- Supporting bit rates ranging from (f_{SCLK}/ 1048576) to (f_{SCLK}/16) bits per second.
- Supporting data formats from 7 to12 bits per frame.
- Both transmit and receive operations can be configured to generate maskable interrupts to the processor.

In conjunction with the general-purpose timer functions, autobaud detection is supported.

The capabilities of UART0 are further extended with support for the InfraRed Data Association (IrDA®) Serial InfraRed Physical Layer Link Specification (SIR) protocol.

PROGRAMMABLE FLAGS (PFX)

The ADSP-BF561 has 48 bi-directional, general-purpose I/O, Programmable Flag (PF47–0) pins. The Programmable Flag pins have special functions for SPI port operation. Each programmable flag can be individually controlled as follows by manipulation of the flag control, status, and interrupt registers:

- Flag Direction Control Register – Specifies the direction of each individual PFx pin as input or output.
- Flag Control and Status Registers – Rather than forcing the software to use a read-modify-write process to control the setting of individual flags, the ADSP-BF561 employs a "write one to set" and "write one to clear" mechanism that allows any combination of individual flags to be set or cleared in a single instruction, without affecting the level of any other flags. Two control registers are provided, one register is written to in order to set flag values while another register is written to in order to clear flag values. Reading the flag status register allows software to interrogate the sense of the flags.
- Flag Interrupt Mask Registers – The Flag Interrupt Mask Registers allow each individual PFx pin to function as an interrupt to the processor. Similar to the Flag Control Registers that are used to set and clear individual flag values, one Flag Interrupt Mask Register sets bits to enable interrupt function, and the other Flag Interrupt Mask register clears bits to disable interrupt function. PFx pins defined as inputs can be configured to generate hardware interrupts, while output PFx pins can be configured to generate software interrupts.
- Flag Interrupt Sensitivity Registers – The Flag Interrupt Sensitivity Registers specify whether individual PFx pins are level- or edge-sensitive and specify-if edge-sensitive-whether just the rising edge or both the rising and falling edges of the signal are significant. One register selects the type of sensitivity, and one register selects which edges are significant for edge-sensitivity.

TIMERS

There are fourteen (14) programmable timer units in the ADSP-BF561. Twelve general-purpose timers have an external pin that can be configured either as a Pulse Width Modulator (PWM) or timer output, as an input to lock the timer, or for measuring pulse widths of external events. Each of the twelve general-purpose timer units can be independently programmed as a PWM, internally or externally clocked timer, or pulse width counter. The general-purpose timer units can be used in conjunction with the UART to measure the width of the pulses in the data stream to provide an auto-baud detect function for a serial channel.

The general-purpose timers can generate interrupts to the processor core providing periodic events for synchronization, either to the processor clock or to a count of external signals. In addition to the twelve general-purpose programmable timers, another timer is also provided for each core. These extra timers are clocked by the internal processor clock (CCLK) and is typically used as a system tick clock for generation of operating system periodic interrupts.

PARALLEL PERIPHERAL INTERFACE

The processor provides two Parallel Peripheral Interfaces (PPI) that can connect directly to parallel A/D and D/A converters, ITU-R-601/656 video encoders and decoders, and other general purpose peripherals. Each PPI consists of a dedicated input clock pin, up to 3 frame synchronization pins, and up to 16 data pins.

In ITU-R 656 mode, the PPI receives and parses a data stream of 8- bit or 10-bit data elements. On-chip decode of embedded preamble control and synchronization information is supported.

General Purpose Mode Descriptions

The general-purpose modes of the PPI are intended to suit a wide variety of data capture and transmission applications. The modes are divided into four main categories, each allowing up to 16 bits of data transfer per PPI_CLK cycle:

- Data Receive with Internally Generated Frame Syncs.
- Data Receive with Externally Generated Frame Syncs.
- Data Transmit with Internally Generated Frame Syncs.
- Data Transmit with Externally Generated Frame Syncs.

Input Mode

These modes support ADC/DAC connections, as well as video communication with hardware signaling. Many of the modes support more than one level of frame synchronization. If desired, a programmable delay can be inserted between assertion of a frame sync and reception / transmission of data.

ITU -R 656 Mode Descriptions

Three distinct ITU-R 656 modes are supported:

- Active Video Only Mode
- Vertical Blanking Only Mode
- Entire Field Mode

Active Video Only Mode

In this mode, the PPI does not read in any data between the End of Active Video (EAV) and Start of Active Video (SAV) preamble symbols, or any data present during the vertical blanking intervals. In this mode, the control byte sequences are not stored to memory; they are filtered by the PPI.

Vertical Blanking Interval Mode

In this mode, the PPI only transfers vertical blanking interval (VBI) data, as well as horizontal blanking information and control byte sequences on VBI lines.

Entire Field Mode

In this mode, the entire incoming bitstream is read in through the PPI. This includes active video, control preamble sequences, and ancillary data that may be embedded in horizontal and vertical blanking intervals.

Though not explicitly supported, ITU,-656 output functionality can be achieved by setting up the entire frame structure (including active video, blanking and control information) in memory and streaming the data out of the PPI in a frame sync-less mode. The processor's 2D DMA features facilitate this transfer by allowing the static frame buffer (blanking and control codes) to be placed in memory once, and simply updating the active video information on per-frame basis.

These modes support ADC/DAC connections, as well as video communication with hardware signaling. Many of the modes support more than one level of frame synchronization. If desired, a programmable delay can be inserted between assertion of a frame sync and reception/transmission of data.

DYNAMIC POWER MANAGEMENT

The ADSP-BF561 provides four operating modes, each with a different performance/power profile. In addition, Dynamic Power Management provides the control functions to dynamically alter the processor core supply voltage, further reducing power dissipation. Control of clocking to each of the ADSP-BF561 peripherals also reduces power consumption. See Table 3 for a summary of the power settings for each mode.

Full-On Operating Mode – Maximum Performance

In the Full-On mode, the PLL is enabled and is not bypassed, providing capability for maximum operational frequency. This is the default execution state in which maximum performance can be achieved. The processor cores and all enabled peripherals run at full speed.

Active Operating Mode – Moderate Power Savings

In the Active mode, the PLL is enabled but bypassed. Because the PLL is bypassed, the processor's core clock (CCLK) and system clock (SCLK) run at the input clock (CLKIN) frequency. In this mode, the CLKIN to CCLK multiplier ratio can be changed, although the changes are not realized until the Full-On mode is entered. DMA access is available to appropriately configured L1 memories.

In the Active mode, it is possible to disable the PLL through the PLL Control register (PLL_CTL). If disabled, the PLL must be re-enabled before transitioning to the Full-On or Sleep modes.

Table 3. Power Settings

Mode	PLL	PLL Bypassed	Core Clock (CCLK)	System Clock (SCLK)	Core Power
Full On	Enabled	No	Enabled	Enabled	On
Active	Enabled/ Disabled	Yes	Enabled	Enabled	On

Table 3. Power Settings (Continued)

Mode	PLL	PLL Bypassed	Core Clock (CCLK)	System Clock (SCLK)	Core Power
Sleep	Enabled	–	Disabled	Enabled	On
Deep Sleep	Disabled	–	Disabled	Disabled	On
Hibernate	Disabled	–	Disabled	Disabled	Off

Hibernate Operating Mode—Maximum Static Power Savings

The Hibernate mode maximizes static power savings by disabling the voltage and clocks to the processor core (CCLK) and to all the synchronous peripherals (SCLK). The internal voltage regulator for the processor can be shut off by writing b#00 to the FREQ bits of the VR_CTL register. This disables both CCLK and SCLK. Furthermore, it sets the internal power supply voltage (V_{DDINT}) to 0 V to provide the lowest static power dissipation. Any critical information stored internally (memory contents, register contents, etc.) must be written to a non-volatile storage device prior to removing power if the processor state is to be preserved. Since V_{DDEXT} is still supplied in this mode, all of the external pins tri-state, unless otherwise specified. This allows other devices that may be connected to the processor to have power still applied without drawing unwanted current. The internal supply regulator can be woken up by asserting the $\overline{RESET}$ pin.

Sleep Operating Mode—High Dynamic Power Savings

The Sleep mode reduces power dissipation by disabling the clock to the processor core (CCLK). The PLL and system clock (SCLK), however, continue to operate in this mode. Typically an external event will wake up the processor. When in the Sleep mode, assertion of wakeup will cause the processor to sense the value of the BYPASS bit in the PLL Control register (PLL_CTL).

When in the Sleep mode, system DMA access to L1 memory is not supported.

Deep Sleep Operating Mode—Maximum Dynamic Power Savings

The Deep Sleep mode maximizes power savings by disabling the clocks to the processor cores (CCLK) and to all synchronous peripherals (SCLK). Asynchronous peripherals will not be able to access internal resources or external memory. This powered-down mode can only be exited by assertion of the reset interrupt ($\overline{RESET}$). If BYPASS is disabled, the processor will transition to the Full On mode. If BYPASS is enabled, the processor will transition to the Active mode.

Power Savings

As shown in Table 4, the ADSP-BF561 supports two different power domains. The use of multiple power domains maximizes flexibility, while maintaining compliance with industry standards and conventions. By isolating the internal logic of the ADSP-BF561 into its own power domain, separate from the I/O,

the processor can take advantage of Dynamic Power Management, without affecting the I/O devices. There are no sequencing requirements for the various power domains.

Table 4. ADSP-BF561 Power Domains

Power Domain	VDD Range
All internal logic	V_{DDINT}
I/O	V_{DDEXT}

The power dissipated by a processor is largely a function of the clock frequency of the processor and the square of the operating voltage. For example, reducing the clock frequency by 25% results in a 25% reduction in dynamic power dissipation, while reducing the voltage by 25% reduces dynamic power dissipation by more than 40%. Further, these power savings are additive, in that if the clock frequency and supply voltage are both reduced, the power savings can be dramatic.

The Dynamic Power Management feature of the ADSP-BF561 allows both the processor's input voltage (V_{DDINT}) and clock frequency (f_{CCLK}) to be dynamically controlled.

The savings in power dissipation can be modeled using the Power Savings Factor and % Power Savings calculations.

The Power Savings Factor is calculated as:

$$\textit{Power Savings Factor} = \frac{f_{CCLKRED}}{f_{CCLKNOM}} \times \left(\frac{V_{DDINTRED}}{V_{DDINTNOM}}\right)^2 \times \left(\frac{T_{RED}}{T_{NOM}}\right)$$

where the variables in the equations are:

- $f_{CCLKNOM}$ is the nominal core clock frequency
- $f_{CCLKRED}$ is the reduced core clock frequency
- $V_{DDINTNOM}$ is the nominal internal supply voltage
- $V_{DDINTRED}$ is the reduced internal supply voltage
- T_{NOM} is the duration running at $f_{CCLKNOM}$
- T_{RED} is the duration running at $f_{CCLKRED}$

The percent power savings is calculated as:

$$\textit{\% Power Savings} = (1 - \textit{Power Savings Factor}) \times 100\%$$

VOLTAGE REGULATION

The ADSP-BF561 processor provides an on-chip voltage regulator that can generate processor core voltage levels 0.85V(-5% / +10%) to 1.2V(-5% / +10%) from an external 2.25 V to 3.6 V supply. Figure 4 shows the typical external components required to complete the power management system. The regulator controls the internal logic voltage levels and is programmable with the Voltage Regulator Control Register (VR_CTL) in increments of 50 mV. To reduce standby power consumption, the internal voltage regulator can be programmed to remove power to the processor core while keeping I/O power (V_{DDEXT}) supplied. While in hibernation, V_{DDEXT} can still be applied, eliminating the need for external buffers. The voltage regulator can be activated from this powerdown state by asserting $\overline{RESET}$, which will then initiate a boot sequence. The regulator can also be disabled and bypassed at the user's discretion.

Figure 4. Voltage Regulator Circuit

CLOCK SIGNALS

The ADSP-BF561 can be clocked by an external crystal, a sine wave input, or a buffered, shaped clock derived from an external clock oscillator.

If an external clock is used, it should be a TTL compatible signal and must not be halted, changed, or operated below the specified frequency during normal operation. This signal is connected to the processor's CLKIN pin. When an external clock is used, the XTAL pin must be *left* unconnected.

Alternatively, because the ADSP-BF561 includes an on-chip oscillator circuit, an external crystal may be used. The crystal should be connected across the CLKIN and XTAL pins, with two capacitors connected as shown in Figure 5

Capacitor values are dependent on crystal type and should be specified by the crystal manufacturer. A parallel-resonant, fundamental frequency, microprocessor-grade crystal should be used.

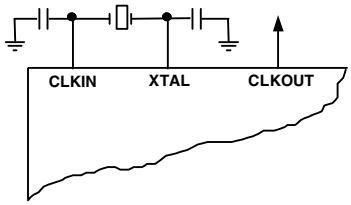

Figure 5. External Crystal Connections

As shown in Figure 6, the core clock (CCLK) and system peripheral clock (SCLK) are derived from the input clock (CLKIN) signal. An on-chip PLL is capable of multiplying the CLKIN signal by a user programmable 1x to 63x multiplication factor. The default multiplier is 10x, but it can be modified by a software instruction sequence. On-the-fly frequency changes can be effected by simply writing to the PLL_DIV register.

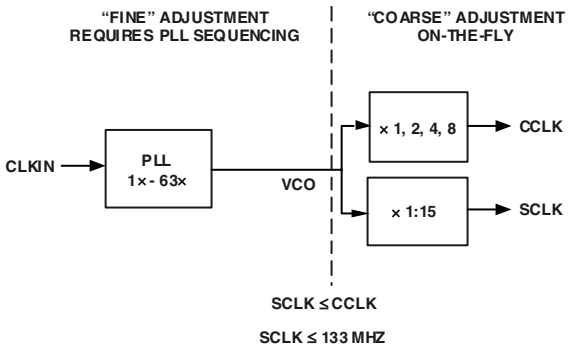

Figure 6. Frequency Modification Methods

All on-chip peripherals are clocked by the system clock (SCLK). The system clock frequency is programmable by means of the SSEL3–0 bits of the PLL_DIV register. The values programmed into the SSEL fields define a divide ratio between the PLL output (VCO) and the system clock. SCLK divider values are 1 through 15. Table 5 illustrates typical system clock ratios:

Table 5. Example System Clock Ratios

Signal Name SSEL[3–0]	Divider Ratio VCO/SCLK	Example Frequency Ratios (MHz)	
		VCO	SCLK
0001	1:1	100	100
0110	6:1	300	50
1010	10:1	500	50

The maximum frequency of the system clock is f_{SCLK}. Note that the divisor ratio must be chosen to limit the system clock frequency to its maximum of f_{SCLK}. The SSEL value can be changed dynamically without any PLL lock latencies by writing the appropriate values to the PLL divisor register (PLL_DIV).

The core clock (CCLK) frequency can also be dynamically changed by means of the CSEL[1–0] bits of the PLL_DIV register. Supported CCLK divider ratios are 1, 2, 4, and 8, as shown in Table 6. This programmable core clock capability is useful for fast core frequency modifications.

Table 6. Core Clock Ratios

Signal Name CSEL[1–0]	Divider Ratio VCO/CCLK	Example Frequency Ratios	
		VCO	CCLK
00	1:1	500	500
01	2:1	500	250
10	4:1	200	50
11	8:1	200	25

BOOTING MODES

The ADSP-BF561 has three mechanisms (listed in Table 7) for automatically loading internal L1 instruction memory after a reset. A fourth mode is provided to execute from external memory, bypassing the boot sequence.

Table 7. Booting Modes

BMODE1–0	Description
00	Execute from 16-bit external memory (Bypass Boot ROM)
01	Boot from 8/16-bit flash
10	Reserved
11	Boot from SPI serial ROM (16-bit address range)

The BMODE pins of the Reset Configuration Register, sampled during power-on resets and software-initiated resets, implement the following modes:

- Execute from 16-bit external memory - Execution starts from address 0x2000 0000 with 16-bit packing. The boot ROM is bypassed in this mode. All configuration settings are set for the slowest device possible (3-cycle hold time, 15-cycle R/W access times, 4-cycle setup).
- Boot from 8/16-bit external FLASH memory – The 8/16-bit FLASH boot routine located in boot ROM memory space is set up using Asynchronous Memory Bank 0. All configuration settings are set for the slowest device possible (3-cycle hold time; 15-cycle R/W access times; 4-cycle setup).
- Boot from SPI serial EEPROM (16-bit addressable) – The SPI uses the PF2 output pin to select a single SPI EPROM device, submits a read command at address 0x0000, and begins clocking data into the beginning of L1 instruction memory. A 16-bit addressable SPI-compatible EPROM must be used.

For each of the boot modes, a boot loading protocol is used to transfer program and data blocks, from an external memory device, to their specified memory locations. Multiple memory blocks may be loaded by any boot sequence. Once all blocks are loaded, Core A program execution commences from the start of L1 instruction SRAM (0xFFA0 0000). Core B remains in a held-off state until a certain register bit is cleared. After that, Core B will start execution at address 0xFF60 0000.

In addition, bit 4 of the Reset Configuration Register can be set by application code to bypass the normal boot sequence during a software reset. For this case, the processor jumps directly to the beginning of L1 instruction memory.

INSTRUCTION SET DESCRIPTION

The Blackfin processor family assembly language instruction set employs an algebraic syntax that was designed for ease of coding and readability. The instructions have been specifically tuned to provide a flexible, densely encoded instruction set that compiles to a very small final memory size. The instruction set also provides fully featured multifunction instructions that allow the programmer to use many of the processor core resources in a single instruction. Coupled with many features more often seen on microcontrollers, this instruction set is very efficient when compiling C and C++ source code. In addition, the architecture supports both a user (algorithm/application code) and a supervisor (O/S kernel, device drivers, debuggers, ISRs) mode of operations, allowing multiple levels of access to core processor resources.

The assembly language, which takes advantage of the processor's unique architecture, offers the following advantages:

- Seamlessly integrated DSP/CPU features are optimized for both 8-bit and 16-bit operations.
- A multi-issue load/store modified-Harvard architecture, which supports two 16-bit MAC or four 8-bit ALU + two load/store + two pointer updates per cycle.
- All registers, I/O, and memory are mapped into a unified 4G-byte memory space providing a simplified programming model.
- Microcontroller features, such as arbitrary bit and bit-field manipulation, insertion, and extraction; integer operations on 8-, 16-, and 32-bit data-types; and separate user and kernel stack pointers.
- Code density enhancements, which include intermixing of 16- and 32-bit instructions (no mode switching, no code segregation). Frequently used instructions are encoded as 16-bits.

DEVELOPMENT TOOLS

The ADSP-BF561 is supported with a complete set of CROSSCORE™ software and hardware development tools, including Analog Devices emulators and the VisualDSP++® development environment. The same emulator hardware that supports other Analog Devices processors also fully emulates the ADSP-BF561.

The VisualDSP++ project management environment lets programmers develop and debug an application. This environment includes an easy-to-use assembler that is based on an algebraic syntax, an archiver (librarian/library builder), a linker, a loader, a cycle-accurate instruction-level simulator, a C/C++ compiler, and a C/C++ run-time library that includes DSP and mathematical functions. A key point for these tools is C/C++ code efficiency. The compiler has been developed for efficient translation of C/C++ code to Blackfin assembly. The Blackfin processor has architectural features that improve the efficiency of compiled C/C++ code.

The VisualDSP++ debugger has a number of important features. Data visualization is enhanced by a plotting package that offers a significant level of flexibility. This graphical representation of user data enables the programmer to quickly determine the performance of an algorithm. As algorithms grow in complexity, this capability can have increasing significance on the designer's development schedule, increasing productivity. Statistical profiling enables the programmer to non intrusively poll the processor as it is running the program. This feature, unique to VisualDSP++, enables the software developer to passively gather important code execution metrics without interrupting the real-time characteristics of the program. Essentially, the developer can identify bottlenecks in software quickly and efficiently. By using the profiler, the programmer can focus on those areas in the program that impact performance and take corrective action.

Debugging both C/C++ and assembly programs with the VisualDSP++ debugger, programmers can:

- View mixed C/C++ and assembly code (interleaved source and object information)
- Insert breakpoints
- Set conditional breakpoints on registers, memory, and stacks
- Trace instruction execution
- Perform linear or statistical profiling of program execution

- Fill, dump, and graphically plot the contents of memory
- Perform source level debugging
- Create custom debugger windows

The VisualDSP++ IDE lets programmers define and manage software development. Its dialog boxes and property pages let programmers configure and manage all development tools, including Color Syntax Highlighting in the VisualDSP++ editor. These capabilities permit programmers to:

- Control how the development tools process inputs and generate outputs.
- Maintain a one-to-one correspondence with the tool's command line switches.

The VisualDSP++ Kernel (VDK) incorporates scheduling and resource management tailored specifically to address the memory and timing constraints of embedded, real-time programming. These capabilities enable engineers to develop code more effectively, eliminating the need to start from the very beginning, when Developing new application code. The VDK features include Threads, Critical and Unscheduled regions, Semaphores, Events, and Device flags. The VDK also supports Priority-based, Pre-emptive, Cooperative and Time-Sliced scheduling approaches. In addition, the VDK was designed to be scalable. If the application does not use a specific feature, the support code for that feature is excluded from the target system.

Because the VDK is a library, a developer can decide whether to use it or not. The VDK is integrated into the VisualDSP++ development environment, but can also be used with standard command-line tools. When the VDK is used, the development environment assists the developer with many error-prone tasks and assists in managing system resources, automating the generation of various VDK based objects, and visualizing the system state, when debugging an application that uses the VDK.

VCSE is Analog Devices technology for creating, using, and reusing software components (independent modules of substantial functionality) to quickly and reliably assemble software applications. Download components from the Web and drop them into the application. Publish component archives from within VisualDSP++. VCSE supports component implementation in C/C++ or assembly language.

Use the Expert Linker to visually manipulate the placement of code and data on the embedded system. View memory utilization in a color-coded graphical form, easily move code and data to different areas of the processor or external memory with the drag of the mouse, examine run time stack and heap usage. The Expert Linker is fully compatible with existing Linker Definition File (LDF), allowing the developer to move between the graphical and textual environments.

Analog Devices' emulators use the IEEE 1149.1 JTAG test access port of the ADSP-BF561 to monitor and control the target board processor during emulation. The emulator provides full-speed emulation, allowing inspection and modification of memory, registers, and processor stacks. Non intrusive in-circuit emulation is assured by the use of the processor's JTAG interface—the emulator does not affect target system loading or timing.

In addition to the software and hardware development tools available from Analog Devices, third parties provide a wide range of tools supporting the Blackfin processor family. Third Party software tools include DSP libraries, real-time operating systems, and block diagram design tools.

DESIGNING AN EMULATOR-COMPATIBLE PROCESSOR BOARD (TARGET)

The Analog Devices family of emulators are tools that every system developer needs to test and debug hardware and software systems. Analog Devices has supplied an IEEE 1149.1 JTAG Test Access Port (TAP) on the ADSP-BF561. The emulator uses the TAP to access the internal features of the processor, allowing the developer to load code, set breakpoints, observe variables, observe memory, and examine registers. The processor must be halted to send data and commands, but once an operation has been completed by the emulator, the processor is set running at full speed with no impact on system timing.

To use these emulators, the target board must include a header that connects the processor's JTAG port to the emulator.

For details on target board design issues including mechanical layout, single processor connections, multiprocessor scan chains, signal buffering, signal termination, and emulator pod logic, see the *EE-68: Analog Devices JTAG Emulation Technical Reference* on the Analog Devices web site (www.analog.com)—use site search on "EE-68." This document is updated regularly to keep pace with improvements to emulator support.

To use these emulators, the target board must include a header that includes a header that connects the processor's JTAG port to the emulation.

ADDITIONAL INFORMATION

This data sheet provides a general overview of the ADSP-BF561 architecture and functionality. For detailed information on the Blackfin DSP family core architecture and instruction set, refer to the *ADSP-BF561 Hardware Reference and the Blackfin Family Instruction Set Reference.*

PIN DESCRIPTIONS

ADSP-BF561 pin definitions are listed in Table 8. Unused inputs should be tied or pulled to V_{DDEXT} or GND.

Table 8. Pin Descriptions

Block	Pin Name	Type	Signals	Function	Driver Type	Pull-up/down requirement
EBIU	ADDR[25:2]	O	24	Address Bus for Async/Sync Access	A	none
	DATA[31:0]	I/O	32	Data Bus for Async/Sync Access	A	none
	$\overline{\text{ABE}}$[3:0]/SDQM[3:0]	O	4	Byte Enables/Data Masks for Async /Sync Access	A	none
	$\overline{\text{BG}}$	O	1	Bus Grant	A	none
	$\overline{\text{BR}}$	I	1	Bus Request	–	pull-up required if function not used
	$\overline{\text{BGH}}$	O	1	Bus Grant Hang	A	none
EBIU (SDRAM)	$\overline{\text{SRAS}}$	O	1	Row Address Strobe	A	none
	$\overline{\text{SCAS}}$	O	1	Column Address Strobe	A	none
	$\overline{\text{SWE}}$	O	1	Write Enable	A	none
	SCKE	O	1	Clock Enable	A	none
	SCLK0/CLKOUT	O	1	Clock Output Pin 0	B	none
	SCLK1	O	1	Clock Output Pin 1	B	none
	SA10	O	1	SDRAM A10 Pin	A	none
	$\overline{\text{SMS}}$[3:0]	O	4	Bank Select	A	none
EBIU (ASYNC)	$\overline{\text{AMS}}$[3:0]	O	4	Bank Select	A	none
	ARDY	I	1	Hardware Ready Control	-	pull-up required if function not used
	$\overline{\text{AOE}}$	O	1	Output Enable	A	none
	$\overline{\text{AWE}}$	O	1	Write Enable	A	none
	$\overline{\text{ARE}}$	O	1	Read Enable	A	none
PPI1	PPI1D[15:8] /PF[47:40]	I/O	8	PPI Data / Programmable Flag Pins	C	software configurable, none
	PPI1D[7:0]	I/O	8	PPI Data Pins	C	software configurable, none
	PPI1CLK	I	1	PPI Clock	-	software configurable, none
	PPI1SYNC1/ TMR8	I/O	1	PPI Sync / Timer	C	software configurable, none
	PPI1SYNC2/ TMR9	I/O	1	PPI Sync / Timer	C	software configurable, none
	PPI1SYNC3	I/O	1	PPI Sync	C	software configurable, none
PPI2	PPI2D[15:8] /PF[39:32]	I/O	8	PPI Data / Programmable Flag Pins	C	software configurable, none
	PPI2D[7:0]	I/O	8	PPI Data Pins	C	software configurable, none
	PPI2CLK	I	1	PPI Clock	-	software configurable, none
	PPI2SYNC1/ TMR10	I/O	1	PPI Sync / Timer	C	software configurable, none
	PPI2SYNC2/ TMR11	I/O	1	PPI Sync / Timer	C	software configurable, none
	PPI2SYNC3	I/O	1	PPI Sync	C	software configurable, none
JTAG	$\overline{\text{EMU}}$	O	1	Emulation Output	C	none
	TCK	I	1	JTAG Clock	-	internal pull-down
	TDO	O	1	JTAG Serial Data Out	C	none
	TDI	I	1	JTAG Serial Data In	-	internal pull-down
	TMS	I	1	JTAG Mode Select	-	internal pull-down
	$\overline{\text{TRST}}$	I	1	JTAG Reset	-	external down necessary if JTAG not used

Table 8. Pin Descriptions (Continued)

Block	Pin Name	Type	Signals	Function	Driver Type	Pull-up/down requirement
UART	RX/PF27	I/O	1	UART Receive / Programmable Flag	C	software configurable, no pull-up/down necessary
	TX/PF26	I/O	1	UART Transmit / Programmable Flag	C	software configurable, no pull-up/down necessary
SPI	MOSI	I/O	1	Master Out Slave In	C	software configurable, no pull-up/down necessary
	MISO	I/O	1	Master In Slave Out	C	pull-up is necessary if booting via SPI
	SCK	I/O	1	SPI Clock	D	software configurable, no pull-up/down necessary
SPORT0	RSCLK0/PF28	I/O	1	Sport0 / Programmable Flag	D	software configurable, no pull-up/down necessary
	RFS0/PF19	I/O	1	Sport0 Receive Frame Sync / Programmable Flag	C	software configurable, no pull-up/down necessary
	DR0PRI	I	1	Sport0 Receive Data Primary	-	software configurable, no pull-up/down necessary
	DR0SEC/PF20	I/O	1	Sport0 Receive Data Secondary / Programmable Flag	C	software configurable, no pull-up/down necessary
	TSCLK0/PF29	I/O	1	Sport0 Transmit Serial Clock / Programmable Flag	D	software configurable, no pull-up/down necessary
	TFS0/PF16	I/O	1	Sport0 Transmit Frame Sync / Programmable Flag	C	software configurable, no pull-up/down necessary
	DT0PRI/PF18	I/O	1	Sport0 Transmit Data Primary / Programmable Flag	C	software configurable, no pull-up/down necessary
	DT0SEC/PF17	I/O	1	Sport0 Transmit Data Secondary / Programmable Flag	C	software configurable, no pull-up/down necessary
SPORT1	RSCLK1/PF30	I/O	1	Sport1 / Programmable Flag	D	software configurable, no pull-up/down necessary
	RFS1/PF24	I/O	1	Sport1 Receive Frame Sync / Programmable Flag	C	software configurable, no pull-up/down necessary
	DR1PRI	I	1	Sport1 Receive Data Primary	-	software configurable, no pull-up/down necessary
	DR1SEC/PF25	I/O	1	Sport1 Receive Data Secondary / Programmable Flag	C	software configurable, no pull-up/down necessary
	TSCLK1/PF31	I/O	1	Sport1 Transmit Serial Clock / Programmable Flag	D	software configurable, no pull-up/down necessary
	TFS1/PF21	I/O	1	Sport1 Transmit Frame Sync / Programmable Flag	C	software configurable, no pull-up/down necessary
	DT1PRI/PF23	I/O	1	Sport1 Transmit Data Primary / Programmable Flag	C	software configurable, no pull-up/down necessary
	DT1SEC/PF22	I/O	1	Sport1 Transmit Data Secondary / Programmable Flag	C	software configurable, no pull-up/down necessary

Table 8. Pin Descriptions (Continued)

Block	Pin Name	Type	Signals	Function	Driver Type	Pull-up/down requirement
PF/TIMER	PF15/EXT CLK	I/O	1	Programmable Flag / external timer clock input	C	software configurable, no pull-up/down necessary
	PF14	I/O	1	Programmable Flag	C	software configurable, no pull-up/down necessary
	PF13	I/O	1	Programmable Flag	C	software configurable, no pull-up/down necessary
	PF12	I/O	1	Programmable Flag	C	software configurable, no pull-up/down necessary
	PF11	I/O	1	Programmable Flag	C	software configurable, no pull-up/down necessary
	PF10	I/O	1	Programmable Flag	C	software configurable, no pull-up/down necessary
	PF9	I/O	1	Programmable Flag	C	software configurable, no pull-up/down necessary
	PF8	I/O	1	Programmable Flag	C	software configurable, no pull-up/down necessary
	PF7/SPISEL7/ TMR7	I/O	1	Programmable Flag / SPI Select / Timer	C	software configurable, no pull-up/down necessary
	PF6/SPISEL6/ TMR6	I/O	1	Programmable Flag / SPI Select / Timer	C	software configurable, no pull-up/down necessary
	PF5/SPISEL5/ TMR5	I/O	1	Programmable Flag / SPI Select / Timer	C	software configurable, no pull-up/down necessary
	PF4/SPISEL4/ TMR4	I/O	1	Programmable Flag / SPI Select / Timer	C	software configurable, no pull-up/down necessary
	PF3/SPISEL3/ TMR3	I/O	1	Programmable Flag / SPI Select / Timer	C	software configurable, no pull-up/down necessary
	PF2/SPISEL2/ TMR2	I/O	1	Programmable Flag / SPI Select / Timer	C	software configurable, no pull-up/down necessary
	PF1/SPISEL1/ TMR1	I/O	1	Programmable Flag / SPI Select / Timer	C	software configurable, no pull-up/down necessary
	PF0/SPISS/ TMR0	I/O	1	Programmable Flag / Slave SPI Select / Timer	C	software configurable, no pull-up/down necessary
Clock Generator	CLKIN	I	1	Clock input	-	needs to be at a level or clocking
	XTAL	O	1	Crystal connection	-	none
Mode Controls	$\overline{\text{RESET}}$	I	1	Chip reset signal	-	always active if core power on
	SLEEP	O	1	Sleep	C	none
	BMODE[1:0]	I	2	Dedicated Mode Pin, Configures the boot mode that is employed following a hardware reset or software reset	-	pull-up or pull-down required
	BYPASS	I	1	PLL BYPASS control	-	pull-up or pull-down required
	NMI0	I	1	Non Maskable interrupt Core A	-	pull-down required if function not used
	NMI1	I	1	Non Maskable interrupt Core B	-	pull-down required if function not used
Regulator	VROUT1-0	O	2	Regulation output	-	N/A

Table 8. Pin Descriptions (Continued)

Block	Pin Name	Type	Signals	Function	Driver Type	Pull-up/down requirement
Supplies	VDDEXT	P	23	Power Supply	-	N/A
	VDDINT	P	14	Power Supply	-	N/A
	GND	G	41	Power Supply Return	-	N/A
	No Connection	NC	2	NC	-	N/A
Total pins			256			

SPECIFICATIONS

Note that component specifications are subject to change without notice.

RECOMMENDED OPERATING CONDITIONS

Parameter	Parameter	Minimum	Nominal	Maximum	Unit
V_{DDINT}	Internal Supply Voltage	0.8	1.2	TBD	V
V_{DDEXT}	External Supply Voltage	2.25	2.5 or 3.3	3.6	V
V_{IH}	High Level Input Voltage[1], @ V_{DDEXT}=maximum	2.0		3.6	V
V_{IL}	Low Level Input Voltage[2], @ V_{DDEXT}=minimum	–0.3		0.6	V
$T_{AMBIENT}$	Ambient Operating Temperature				
	Industrial	-40		85	°C
	Commercial	0		70	°C

[1] The ADSP-BF561 is 3.3 V tolerant (always accepts up to 3.6 V maximum V_{IH}), but voltage compliance (on outputs, V_{OH}) depends on the input V_{DDEXT}, because V_{OH} (maximum) approximately equals V_{DDEXT} (maximum). This 3.3 V tolerance applies to bi-directional and input only pins.

ELECTRICAL CHARACTERISTICS

Parameter		Test Conditions	Minimum	Maximum	Unit
V_{OH}	High Level Output Voltage[1]	@ V_{DDEXT} =3.0V, I_{OH} = –0.5 mA	2.4		V
V_{OL}	Low Level Output Voltage[1]	@ V_{DDEXT} =3.0V, I_{OL} = 2.0 mA		0.4	V
I_{IL}	Low Level Input Current[2]	@ V_{DDEXT} =maximum, V_{IN} = 0 V	-10		V
I_{IH}	High Level Input Current[3]	@ V_{DDEXT} =maximum, V_{IN} = V_{DD} maximum		10	µA
I_{IH}	High Level Input Current[4]	@ V_{DDEXT} =maximum, V_{IN} = V_{DD} maximum		50	µA
I_{OZH}	Three-State Leakage Current[5]	@ V_{DDEXT} = maximum, V_{IN} = V_{DD} maximum		10	µA
I_{OZL}	Three-State Leakage Current[5]	@ V_{DDEXT} = maximum, V_{IN} = 0 V	-10		µA
C_{IN}	Input Capacitance[6, 7]	f_{IN} = 1 MHz, $T_{AMBIENT}$ = 25°C, V_{IN} = 2.5 V		TBD	pF

[1] Applies to output and bidirectional pins.
[2] Applies to all input pins.
[3] Applies to all input pins except TCK, TDI, TMS, and $\overline{TRST}$.
[4] Applies to TCK, TDI, TMS, and $\overline{TRST}$.
[5] Applies to three-statable pins.
[6] Applies to all signal pins.
[7] Guaranteed, but not tested.

ABSOLUTE MAXIMUM RATINGS

Internal (Core) Supply Voltage[1] (V_{DDINT})	−0.3 V to +1.4 V
External (I/O) Supply Voltage[1] (V_{DDEXT})	−0.3 V to +3.8 V
Input Voltage[1]	−0.5 V to 3.6 V
Output Voltage Swing[1]	−0.5 V to V_{DDEXT}+0.5 V
Load Capacitance[1,2]	200 pF
Core Clock (CCLK)[1]	
ADSP-BF561SKBCZ600	600 MHz
ADSP-BF561SKBCZ500	500 MHz
System Clock (SCLK)[1]	133 MHz
Storage Temperature Range[1]	−65°C to +150°C
Junction Temperature Under Bias	125°C
Lead Temperature (5 seconds)[1]	185°C

[1] Stresses greater than those listed above may cause permanent damage to the device. These are stress ratings only. Functional operation of the device at these or any other conditions greater than those indicated in the operational sections of this specification is not implied. Exposure to absolute maximum rating conditions for extended periods may affect device reliability.

[2] For proper SDRAM controller operation, the maximum load capacitance is 50 pF (at 3.3V) or 30 pF (at 2.5V) for ADDR25-2, DATA31-0, $\overline{\text{ABE3-0}}$/SDQM3-0, CLKOUT, SCKE, SA10, $\overline{\text{SRAS}}$, $\overline{\text{SCAS}}$, $\overline{\text{SWE}}$, and $\overline{\text{SMS}}$.

ESD SENSITIVITY

CAUTION

ESD (electrostatic discharge) sensitive device. Electrostatic charges as high as 4000 V readily accumulate on the human body and test equipment and can discharge without detection. Although the ADSP-BF561 features proprietary ESD protection circuitry, permanent damage may occur on devices subjected to high energy electrostatic discharges. Therefore, proper ESD precautions are recommended to avoid performance degradation or loss of functionality.

TIMING SPECIFICATIONS

Table 9 and Table 12 describe the timing requirements for the ADSP-BF561 clocks. Take care in selecting MSEL, SSEL, and CSEL ratios so as not to exceed the maximum core clock, system clock and Voltage Controlled Oscillator (VCO) operating frequencies, as described in Absolute Maximum Ratings on Page 21. Table 12 describes Phase-Locked Loop operating conditions.

Table 9. Core and System Clock Requirements—ADSP-BF561SKBCZ500

Parameter		Minimum	Maximum	Unit
t_{CCLK}	Core Cycle Period (V_{DDINT}=1.4 V–± 50 mV)	na		ns
t_{CCLK}	Core Cycle Period (V_{DDINT}=1.35 V–5%)	na		ns
t_{CCLK}	Core Cycle Period (V_{DDINT}=1.2 V–5%)	2		ns
t_{CCLK}	Core Cycle Period (V_{DDINT}=1.1 V–5%)	2.25		ns
t_{CCLK}	Core Cycle Period (V_{DDINT}=1.0 V–5%)	2.70		ns
t_{CCLK}	Core Cycle Period (V_{DDINT}=0.9 V–5%)	3.20		ns
t_{CCLK}	Core Cycle Period (V_{DDINT}=0.8 V)	4.00		ns

Table 10. Core and System Clock Requirements—ADSP-BF561SKBCZ600X

Parameter		Minimum	Maximum	Unit
t_{CCLK}	Core Cycle Period (V_{DDINT}=1.4 V–± 50 mV)	na		ns
t_{CCLK}	Core Cycle Period (V_{DDINT}=1.35 V–5%)	na		ns
t_{CCLK}	Core Cycle Period (V_{DDINT}=1.2 V–5%)	1.66		ns
t_{CCLK}	Core Cycle Period (V_{DDINT}=1.1 V–5%)	2.25		ns
t_{CCLK}	Core Cycle Period (V_{DDINT}=1.0 V–5%)	2.70		ns
t_{CCLK}	Core Cycle Period (V_{DDINT}=0.9 V–5%)	3.20		ns
t_{CCLK}	Core Cycle Period (V_{DDINT}=0.8 V)	4.00		ns

Table 11. Core and System Clock Requirements—ADSP-BF561SBB600

Parameter		Minimum	Maximum	Unit
t_{CCLK}	Core Cycle Period (V_{DDINT}=1.4 V–± 50 mV)	na		ns
t_{CCLK}	Core Cycle Period (V_{DDINT}=1.35 V–5%)	1.66		ns
t_{CCLK}	Core Cycle Period (V_{DDINT}=1.2 V–5%)	2.0		ns
t_{CCLK}	Core Cycle Period (V_{DDINT}=1.1 V–5%)	2.25		ns
t_{CCLK}	Core Cycle Period (V_{DDINT}=1.0 V–5%)	2.70		ns
t_{CCLK}	Core Cycle Period (V_{DDINT}=0.9 V–5%)	3.20		ns
t_{CCLK}	Core Cycle Period (V_{DDINT}=0.8 V)	4.00		ns

Table 12. Phase-Locked Loop Operating Conditions

Parameter	Minimum	Maximum	Unit
Voltage Controlled Oscillator (VCO) Frequency	50	Maximum CCLK	MHz

Clock and Reset Timing

Table 13 and Figure 7 describe clock and reset operations. Per Figure 7, combinations of CLKIN and clock multipliers must not select core/peripheral clocks in excess of 600/133 MHz.

Table 13. Clock and Reset Timing

Parameter		Min	Max	Unit
Timing Requirements				
t_{CKIN}	CLKIN Period	25.0	100.0	ns
t_{CKINL}	CLKIN Low Pulse[1]	10.0		ns
t_{CKINH}	CLKIN High Pulse[1]	10.0		ns
t_{WRST}	$\overline{\text{RESET}}$ Asserted Pulsewidth Low[2]	11 t_{CKIN}		ns
Switching Characteristics				
t_{SCLK}	CLKOUT Period[3]	7.5[4]		ns

[1] Applies to bypass mode and non-bypass mode.
[2] Applies after power-up sequence is complete. At power-up, the processor's internal phase-locked loop requires no more than 2000 CLKIN cycles, while $\overline{\text{RESET}}$ is asserted, assuming stable power supplies and CLKIN (not including start-up time of external clock oscillator).
[3] The figure below shows a x2 ratio between t_{CKIN} and t_{SCLK}, but the ratio has many programmable options. For more information, see the System Design chapter of the *ADSP-BF561 Hardware Reference*.
[4] t_{SCLK} must always also be larger than t_{CCLK}.

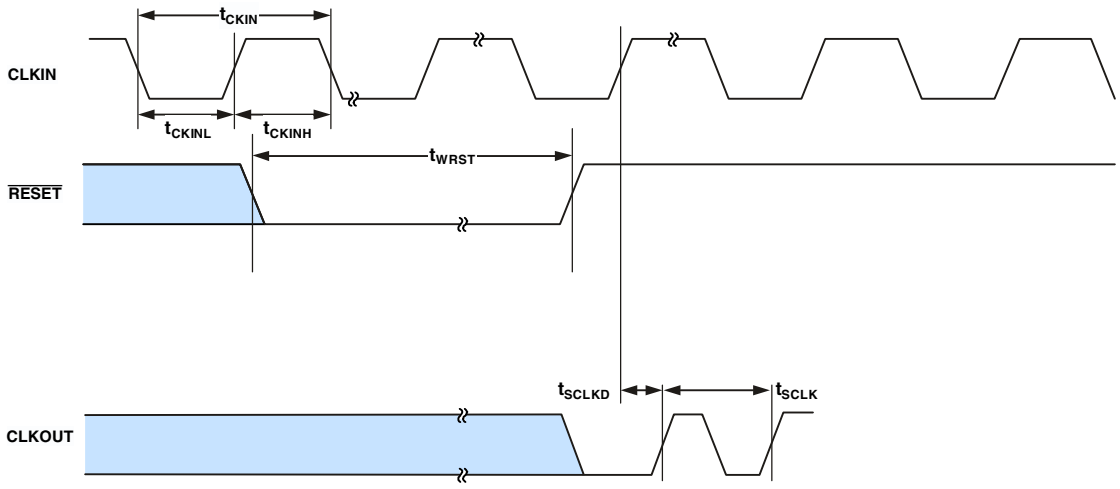

Figure 7. Clock and Reset Timing

Asynchronous Memory Read Cycle Timing

Table 14. Asynchronous Memory Read Cycle Timing

Parameter		Min	Max	Unit
Timing Requirements				
t_{SDAT}	DATA15–0 Setup Before CLKOUT	2.1		ns
t_{HDAT}	DATA15–0 Hold After CLKOUT	0.8		ns
t_{SARDY}	ARDY Setup Before CLKOUT	4.0		ns
t_{HARDY}	ARDY Hold After CLKOUT	0.0		ns
Switching Characteristic				
t_{DO}	Output Delay After CLKOUT[1]		6.0	ns
t_{HO}	Output Hold After CLKOUT [1]	0.8		ns

[1] Output pins include $\overline{AMS}$3–0, $\overline{ABE}$3–0, ADDR25–2, $\overline{AOE}$, $\overline{ARE}$.

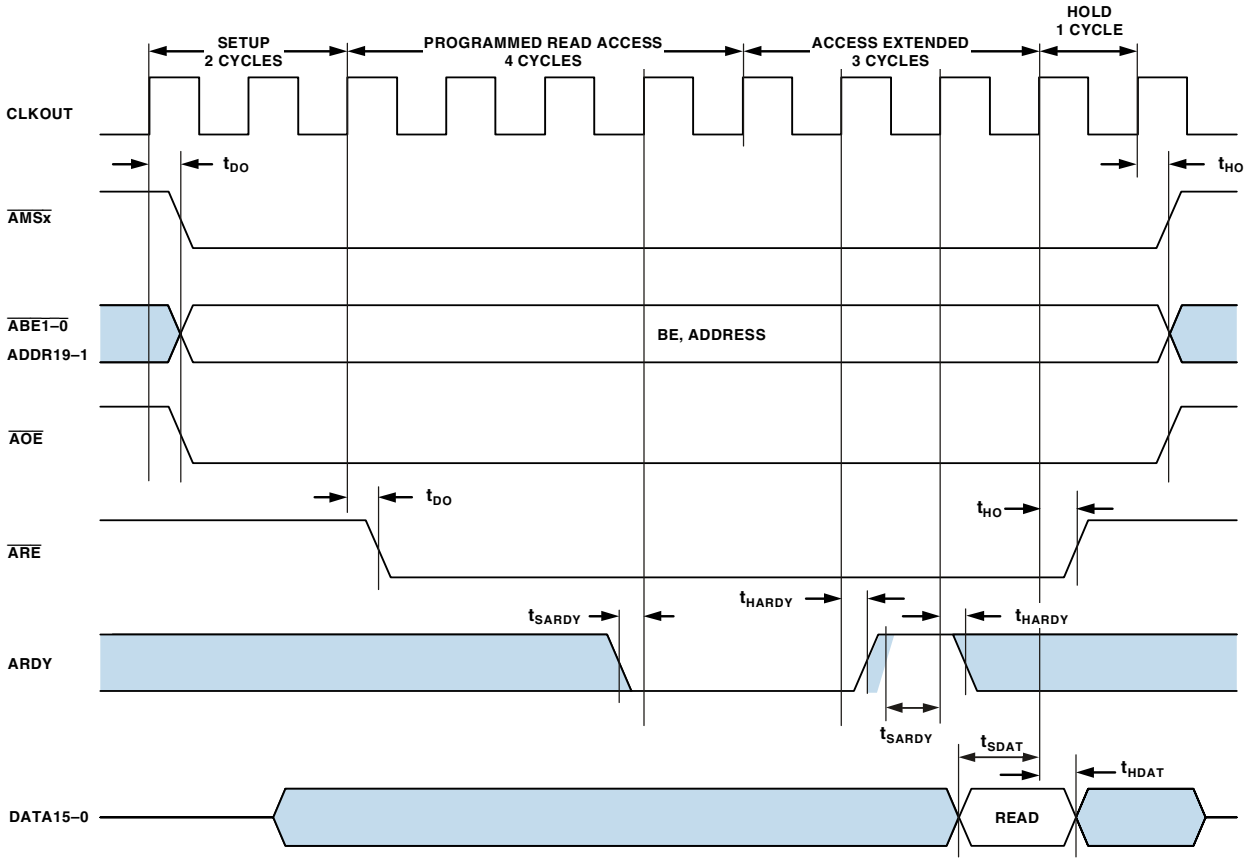

Figure 8. Asynchronous Memory Read Cycle Timing

Asynchronous Memory Write Cycle Timing

Table 15. Asynchronous Memory Write Cycle Timing

Parameter		Min	Max	Unit
Timing Requirements				
t_{SARDY}	ARDY Setup Before CLKOUT	4.0		ns
t_{HARDY}	ARDY Hold After CLKOUT	0.0		ns
Switching Characteristic				
t_{DDAT}	DATA15–0 Disable After CLKOUT		6.0	ns
t_{ENDAT}	DATA15–0 Enable After CLKOUT	1.0		ns
t_{DO}	Output Delay After CLKOUT[1]		6.0	ns
t_{HO}	Output Hold After CLKOUT [1]	0.8		ns

[1] Output pins include $\overline{AMS}$3–0, $\overline{ABE}$3–0, ADDR25–2, DATA31–0, $\overline{AOE}$, $\overline{AWE}$.

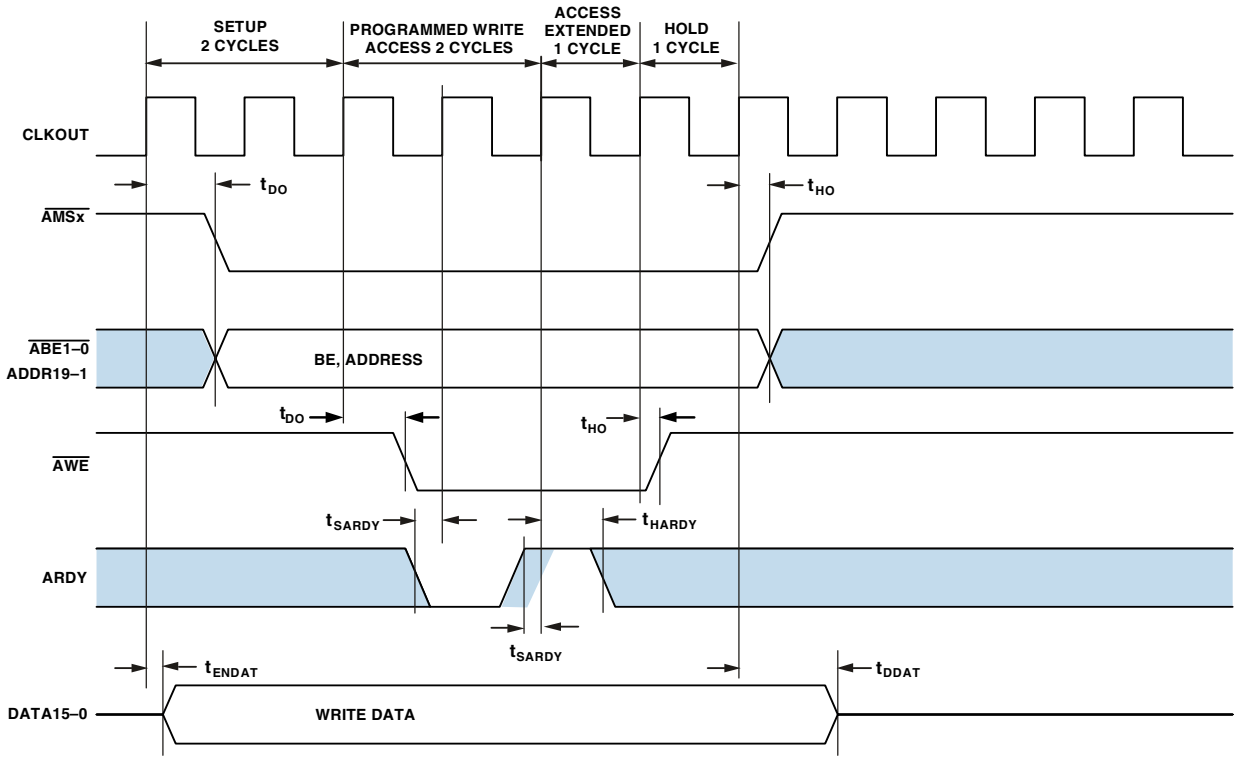

Figure 9. Asynchronous Memory Write Cycle Timing

SDRAM Interface Timing

Table 16. SDRAM Interface Timing

Parameter		Min	Max	Unit
Timing Requirement				
t_{SSDAT}	DATA Setup Before CLKOUT	2.1		ns
t_{HSDAT}	DATA Hold After CLKOUT	0.8		ns
Switching Characteristic				
t_{SCLK}	CLKOUT Period	7.5		ns
t_{SCLKH}	CLKOUT Width High	2.5		ns
t_{SCLKL}	CLKOUT Width Low	2.5		ns
t_{DCAD}	Command, ADDR, Data Delay After CLKOUT[1]		6.0	ns
t_{HCAD}	Command, ADDR, Data Hold After CLKOUT[1]	0.8		ns
t_{DSDAT}	Data Disable After CLKOUT		6.0	ns
t_{ENSDAT}	Data Enable After CLKOUT	1.0		ns

[1] Command pins include: $\overline{SRAS}$, $\overline{SCAS}$, $\overline{SWE}$, SDQM, $\overline{SMS3\text{-}0}$, SA10, SCKE.

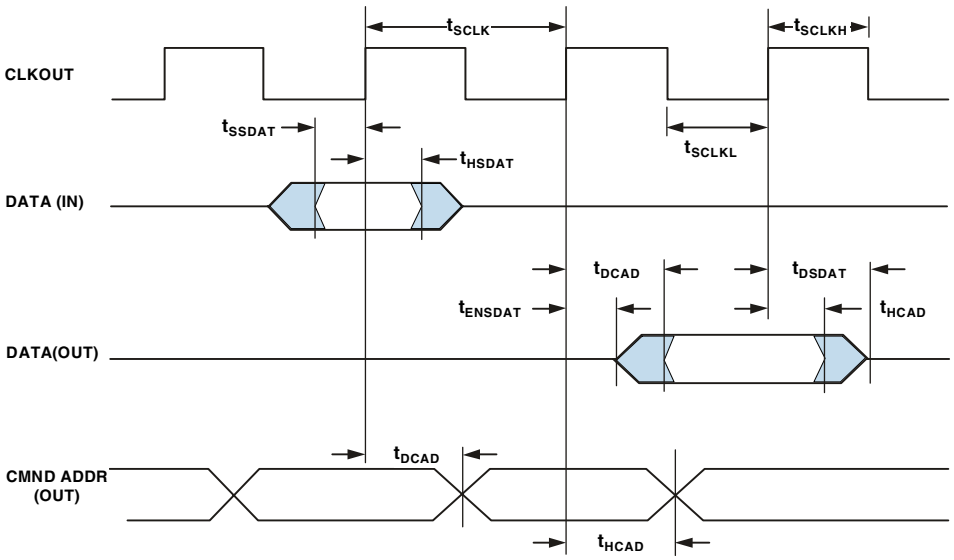

Figure 10. SDRAM Interface Timing

External Port Bus Request and Grant Cycle Timing

Table 17 and Figure 11 describe external port bus request and bus grant operations.

Table 17. External Port Bus Request and Grant Cycle Timing

Parameter[1, 2]		Min	Max	Unit
Timing Requirements				
t_{BS}	$\overline{BR}$ asserted to CLKOUT high setup	4.6		ns
t_{BH}	CLKOUT high to $\overline{BR}$ de-asserted hold time	0.0		ns
Switching Characteristics				
t_{SD}	CLKOUT low to $\overline{SMS}$, address, and $\overline{RD}$/$\overline{WR}$ disable		4.5	ns
t_{SE}	CLKOUT low to $\overline{SMS}$, address, and $\overline{RD}$/$\overline{WR}$ enable		4.5	ns
t_{DBG}	CLKOUT high to $\overline{BG}$ asserted setup		3.6	ns
t_{EBG}	CLKOUT high to $\overline{BG}$ de-asserted hold time		3.6	ns
t_{DBH}	CLKOUT high to $\overline{BGH}$ asserted setup		3.6	ns
t_{EBH}	CLKOUT high to $\overline{BGH}$ de-asserted hold time		3.6	ns

[1] These are preliminary timing parameters that are based on worst-case operating conditions.
[2] The pad loads for these timing parameters are 20 pF.

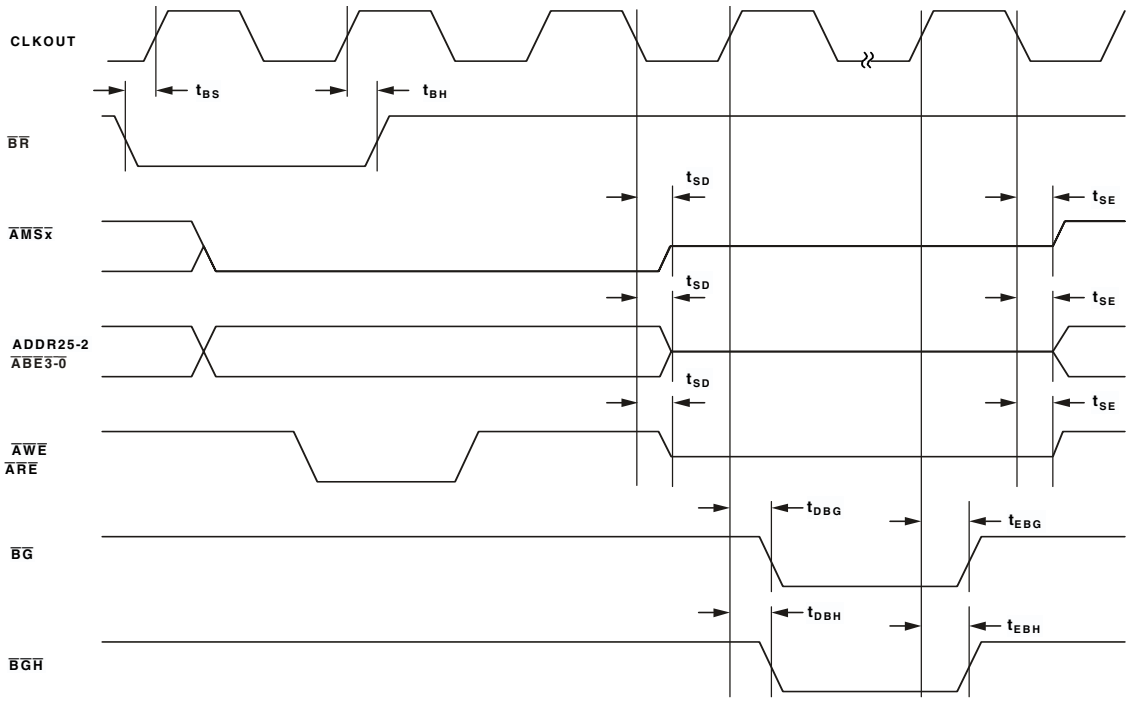

Figure 11. External Port Bus Request and Grant Cycle Timing

Parallel Peripheral Interface Timing

Table 18, Figure 12, describes Parallel Peripheral Interface operations.

Table 18. Parallel Peripheral Interface Timing

Parameter		Min	Max	Unit
Timing Requirements				
t_{PCLKW}	PPIx_CLK Width[1]	6.0		ns
t_{PCLK}	PPI_CLK Period[1]	15.0		ns
Timing Requirements				
t_{SFSPE}	External Frame Sync Setup Before PPI_CLK	3.0		ns
t_{HFSPE}	External Frame Sync H old After PPI_CLK	3.0		ns
t_{SDRPE}	Receive Data Setup Before PPI_CLK	TBD		ns
t_{HDRPE}	Receive Data Hold After PPI_CLK	TBD		ns
Switching Characteristics				
t_{DFSPE}	Internal Frame Sync Delay After PPI_CLK		10.0	ns
t_{HOFSPE}	Internal Frame Sync Hold After PPI_CLK	0.0		ns
t_{DDTPE}	Transmit Data Delay After PPI_CLK		10.0	ns
t_{HDTPE}	Transmit Data Hold After PPI_CLK	0.0		ns

[1] PPI_CLK frequency cannot exceed $f_{SCLK}/2$

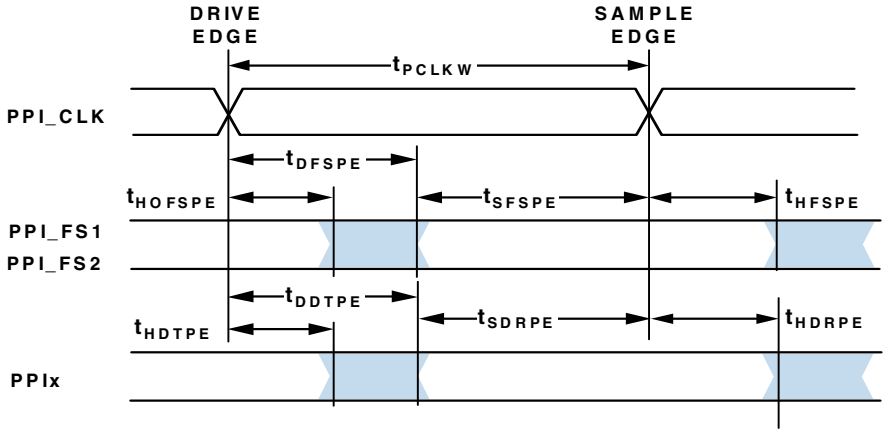

Figure 12. Timing Diagram PPI

Serial Ports

Table 19 through Table 24 on Page 30 and Figure 13 on Page 31 through Figure 15 on Page 33 describe Serial Port operations.

Table 19. Serial Ports—External Clock

Parameter		Min	Max	Unit
Timing Requirements				
t_{SFSE}	TFS/RFS Setup Before TSCLK/RSCLK[1]	3.0		ns
t_{HFSE}	TFS/RFS Hold After TSCLK/RSCLK[1]	3.0		ns
t_{SDRE}	Receive Data Setup Before RSCLK[1]	3.0		ns
t_{HDRE}	Receive Data Hold After RSCLK[1]	3.0		ns
t_{SCLKW}	TSCLK/RSCLK Width	4.5		ns
t_{SCLK}	TSCLK/RSCLK Period	15.0		ns

[1] Referenced to sample edge.

Table 20. Serial Ports—Internal Clock

Parameter		Min	Max	Unit
Timing Requirements				
t_{SFSI}	TFS/RFS Setup Before TSCLK/RSCLK[1]	TBD		ns
t_{HFSI}	TFS/RFS Hold After TSCLK/RSCLK[1]	TBD		ns
t_{SDRI}	Receive Data Setup Before RSCLK[1]	6.0		ns
t_{HDRI}	Receive Data Hold After RSCLK[1]	0.0		ns
t_{SCLKW}	TSCLK/RSCLK Width	4.5		ns
t_{SCLK}	TSCLK/RSCLK Period	15.0		ns

[1] Referenced to sample edge.

Table 21. Serial Ports—External Clock

Parameter		Min	Max	Unit
Switching Characteristics				
t_{DFSE}	TFS/RFS Delay After TSCLK/RSCLK (Internally Generated TFS/RFS)[1]		10.0	ns
t_{HOFSE}	TFS/RFS Hold After TSCLK/RSCLK (Internally Generated TFS/RFS)[1]	0.0		ns
t_{DDTE}	Transmit Data Delay After TSCLK[1]		10.0	ns
t_{HDTE}	Transmit Data Hold After TSCLK[1]	0.0		ns

[1] Referenced to drive edge.

Table 22. Serial Ports—Internal Clock

Parameter		Min	Max	Unit
Switching Characteristics				
t_{DFSI}	TFS/RFS Delay After TSCLK/RSCLK (Internally Generated TFS/RFS)[1]		TBD	ns
t_{HOFSI}	TFS/RFS Hold After TSCLK/RSCLK (Internally Generated TFS/RFS)[1]	TBD		ns
t_{DDTI}	Transmit Data Delay After TSCLK[1]		TBD	ns
t_{HDTI}	Transmit Data Hold After TSCLK[1]	TBD		ns
t_{SCLKIW}	TSCLK/RSCLK Width	4.5		ns

[1] Referenced to drive edge.

Table 23. Serial Ports—Enable and Three-State

Parameter		Min	Max	Unit
Switching Characteristics				
t_{DTENE}	Data Enable Delay from External TSCLK[1]	TBD		ns
t_{DDTTE}	Data Disable Delay from External TSCLK[1]		TBD	ns
t_{DTENI}	Data Enable Delay from Internal TSCLK	TBD		ns
t_{DDTTI}	Data Disable Delay from Internal TSCLK[1]		TBD	ns

[1] Referenced to drive edge.

Table 24. External Late Frame Sync

Parameter		Min	Max	Unit
Switching Characteristics				
$t_{DDTLFSE}$	Data Delay from Late External TFS or External RFS with MCE = 1, MFD = 0[1,2]		TBD	ns
$t_{DTENLFSE}$	Data Enable from late FS or MCE = 1, MFD = 0[1,2]	TBD		ns

[1] MCE = 1, TFS enable and TFS valid follow $t_{DDTENFS}$ and $t_{DDTLFSE}$.
[2] If external RFS/TFS setup to RSCLK/TSCLK > $t_{SCLK}/2$ then $t_{DDTLSCK}$ and $t_{DTENLSCK}$ apply, otherwise $t_{DDTLFSE}$ and $t_{DTENLFS}$ apply.

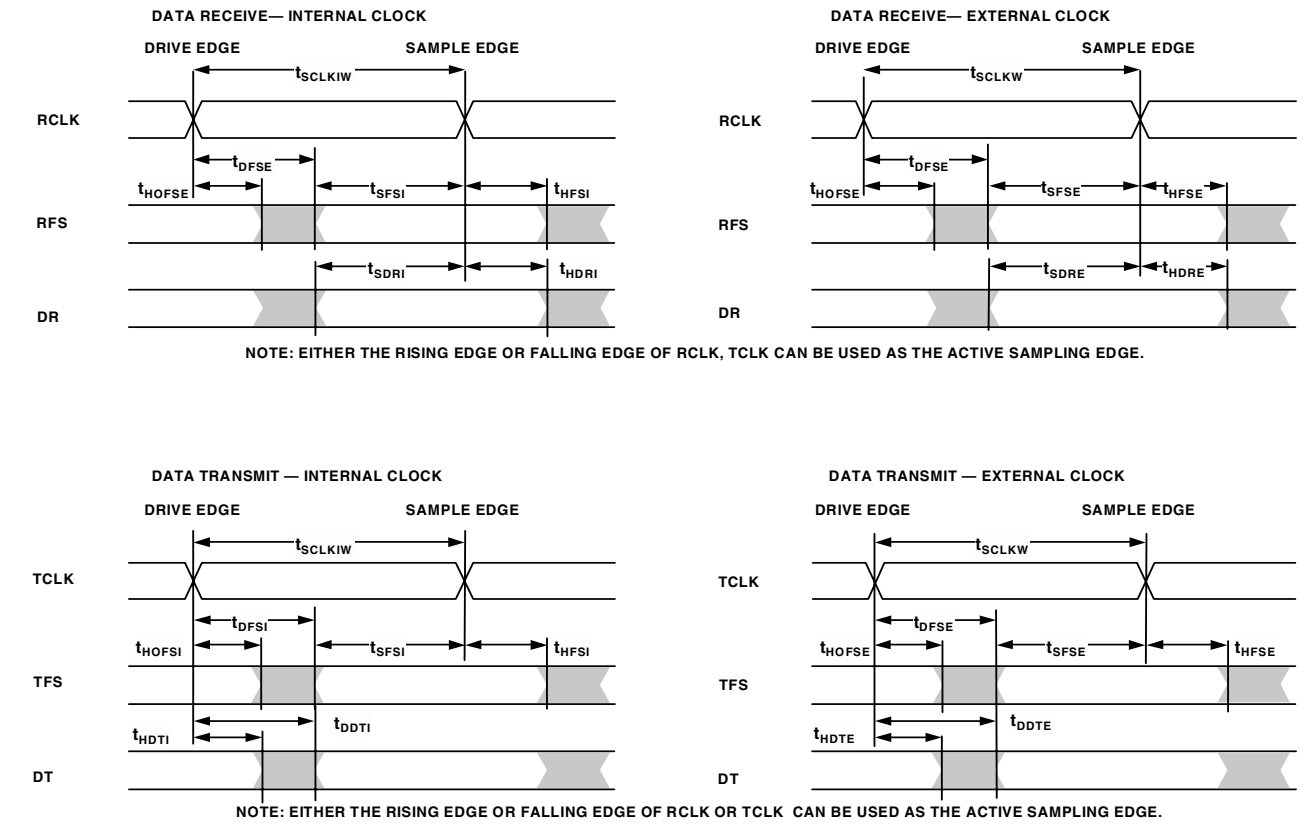

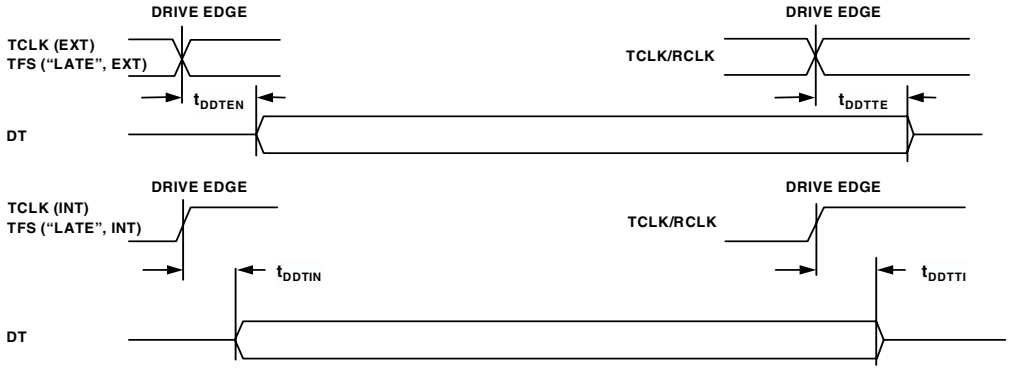

Figure 13. Serial Ports

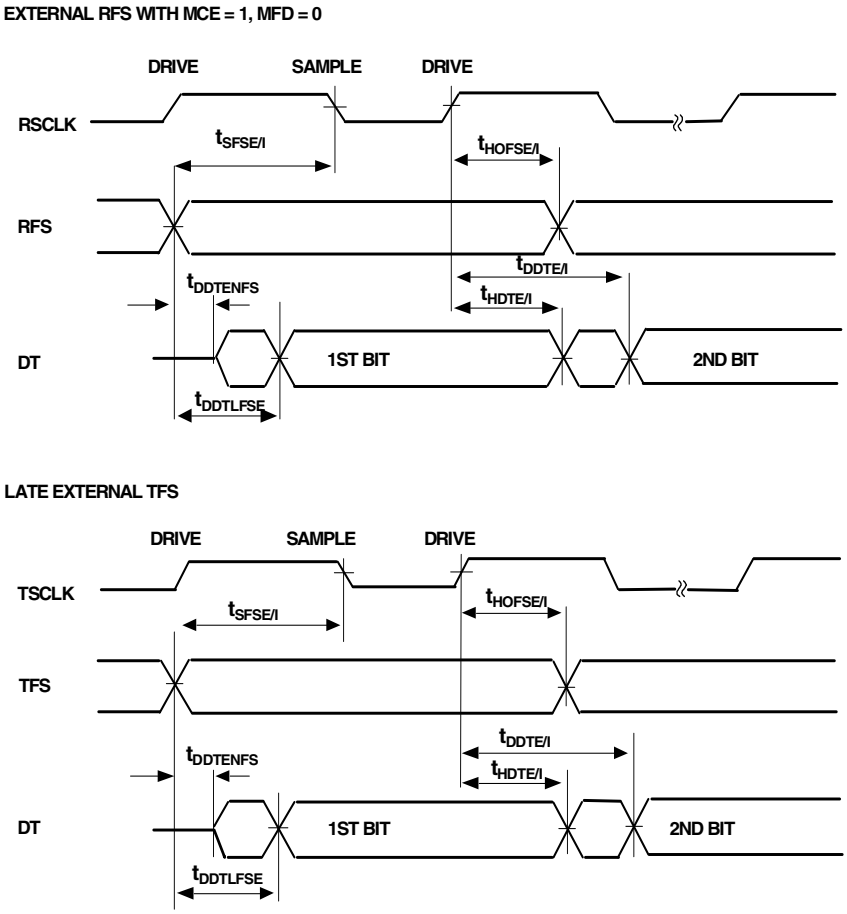

Figure 14. External Late Frame Sync (Frame Sync Setup < $t_{SCLK}/2$)

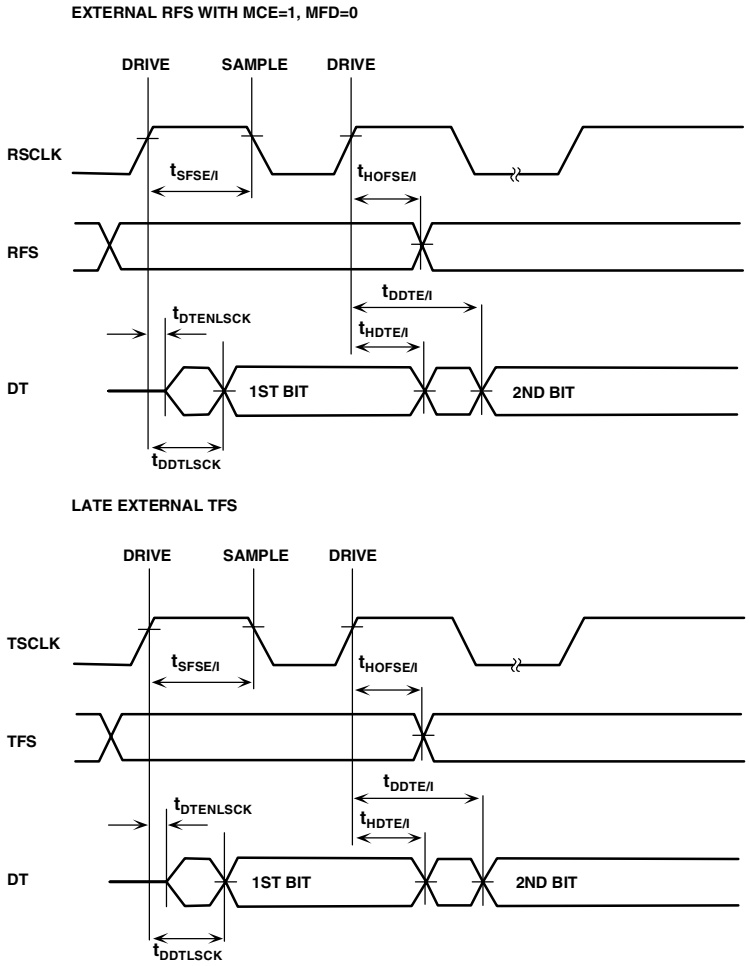

Figure 15. External Late Frame Sync (Frame Sync Setup > $t_{SCLK}/2$)

Serial Peripheral Interface (SPI) Port—Master Timing

Table 25 and Figure 16 describe SPI port master operations.

Table 25. Serial Peripheral Interface (SPI) Port—Master Timing

Parameter		Min	Max	Unit
Timing Requirements				
t_{SSPIDM}	Data input valid to SCK edge (data input setup)	TBD		ns
t_{HSPIDM}	SCK sampling edge to data input invalid	TBD		ns
Switching Characteristics				
t_{SDSCIM}	$\overline{\text{SPISELx}}$ low to first SCK edge	$2t_{SCLK}$-1.5		ns
t_{SPICHM}	Serial clock high period	$2t_{SCLK}$-1.5		ns
t_{SPICLM}	Serial clock low period	$2t_{SCLK}$-1.5		ns
t_{SPICLK}	Serial clock period	$4t_{SCLK}$-1.5		ns
t_{HDSM}	Last SCK edge to $\overline{\text{SPISELx}}$ high	$2t_{SCLK}$-1.5		ns
t_{SPITDM}	Sequential transfer delay	$2t_{SCLK}$-1.5		ns
$t_{DDSPIDM}$	SCK edge to data out valid (data out delay)	TBD	TBD	ns
$t_{HDSPIDM}$	SCK edge to data out invalid (data out hold)	TBD	TBD	ns

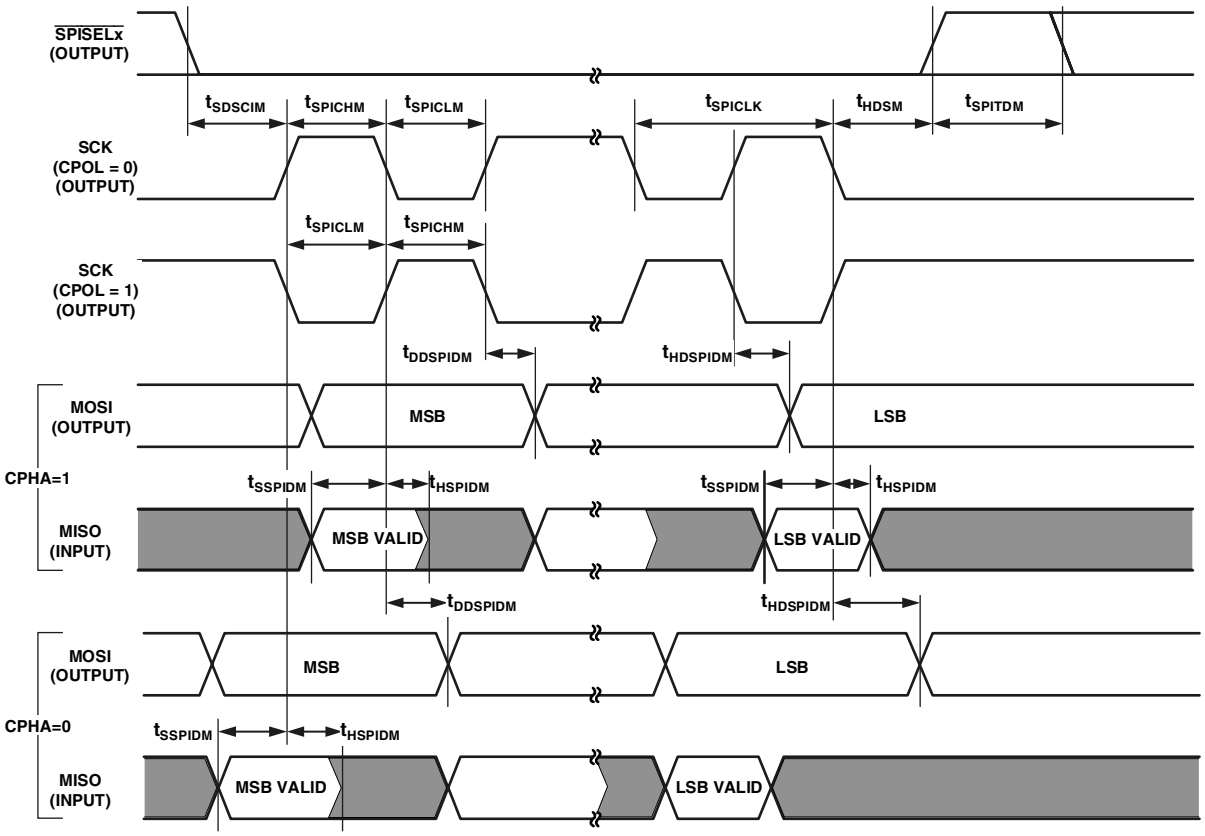

Figure 16. Serial Peripheral Interface (SPI) Port—Master Timing

Serial Peripheral Interface (SPI) Port—Slave Timing

Table 26 and Figure 17 describe SPI port slave operations.

Table 26. Serial Peripheral Interface (SPI) Port—Slave Timing

Parameter		Min	Max	Unit
Timing Requirements				
t_{SPICHS}	Serial clock high period	$2t_{SCLK}$-1.5		ns
t_{SPICLS}	Serial clock low period	$2t_{SCLK}$-1.5		ns
t_{SPICLK}	Serial clock period	$4t_{SCLK}$-1.5		ns
t_{HDS}	Last SCK edge to $\overline{SPISS}$ not asserted	$2t_{SCLK}$-1.5		ns
t_{SPITDS}	Sequential Transfer Delay	$2t_{SCLK}$-1.5		ns
t_{SDSCI}	$\overline{SPISS}$ assertion to first SCK edge	$2t_{SCLK}$-1.5		ns
t_{SSPID}	Data input valid to SCK edge (data input setup)	1.6		ns
t_{HSPID}	SCK sampling edge to data input invalid	1.6		ns
Switching Characteristics				
t_{DSOE}	$\overline{SPISS}$ assertion to data out active	0	8	ns
t_{DSDHI}	$\overline{SPISS}$ deassertion to data high impedance	0	8	ns
t_{DDSPID}	SCK edge to data out valid (data out delay)	0	10	ns
t_{HDSPID}	SCK edge to data out invalid (data out hold)	0	10	ns

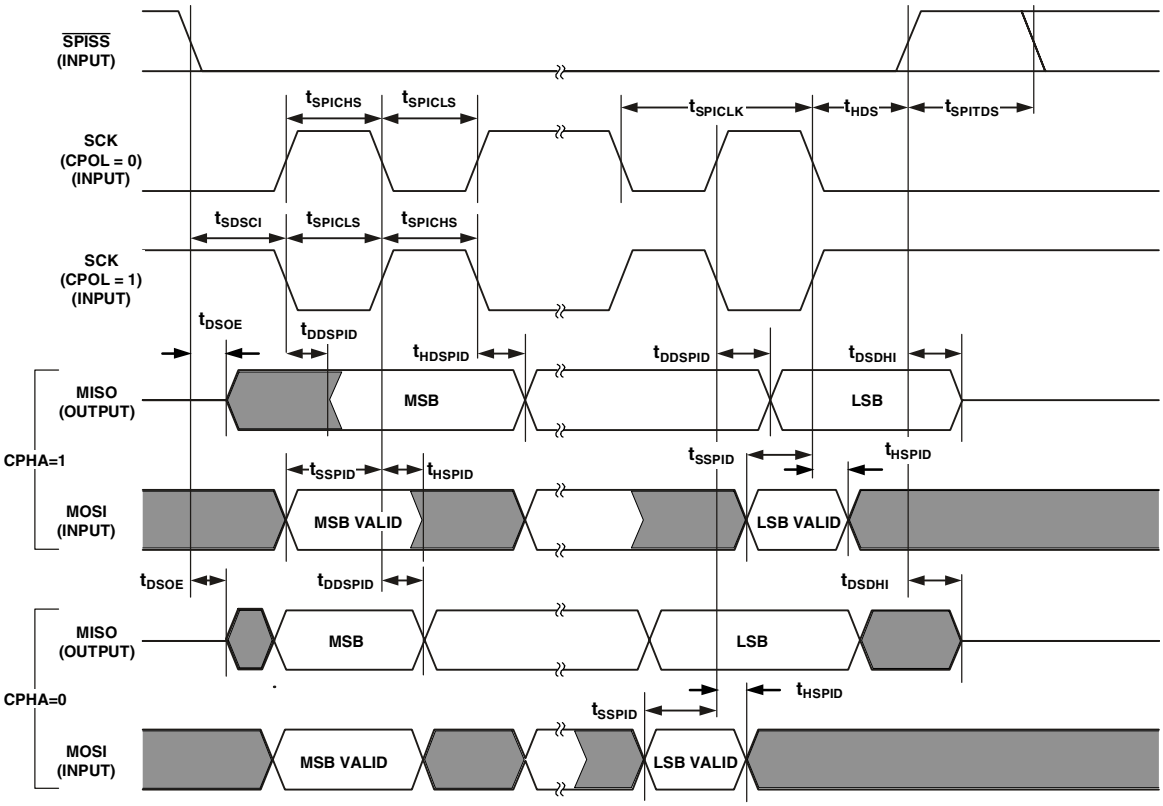

Figure 17. Serial Peripheral Interface (SPI) Port—Slave Timing

Universal Asynchronous Receiver-Transmitter (UART) Port—Receive and Transmit Timing

Figure 18 describes UART port receive and transmit operations. The maximum baud rate is SCLK/16. As shown in Figure 18 there is some latency between the generation internal UART interrupts and the external data operations. These latencies are negligible at the data transmission rates for the UART.

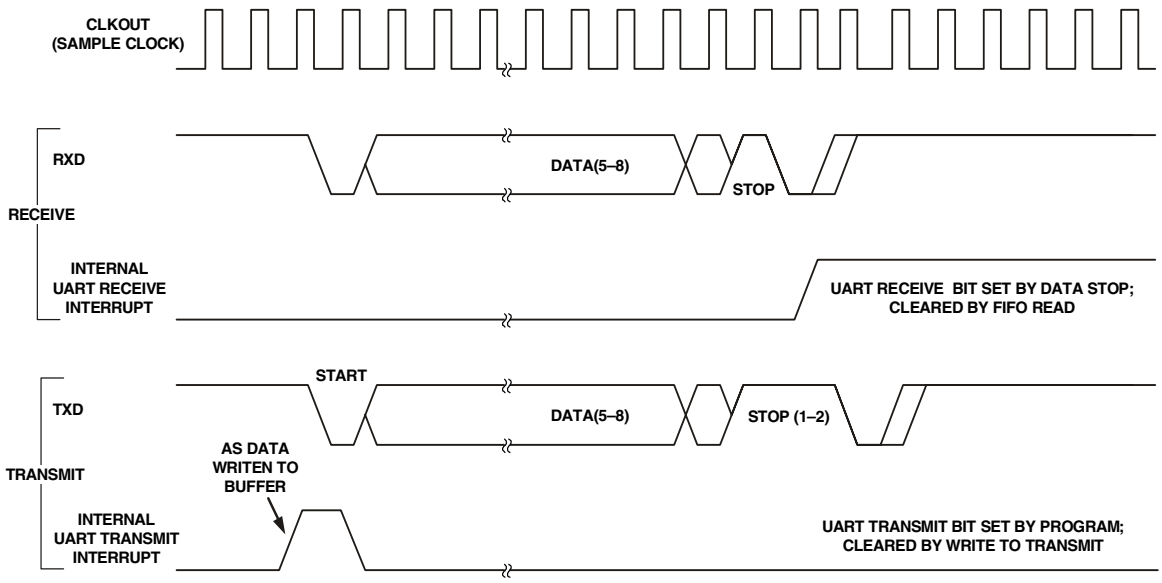

Figure 18. UART Port—Receive and Transmit Timing

Timer Cycle Timing

Table 27 and Figure 19 describe timer expired operations. The input signal is asynchronous in "width capture mode" and "external clock mode" and has an absolute maximum input frequency of $f_{SCLK}/2$ MHz.

Table 27. Timer Cycle Timing

Parameter		Min	Max	Unit
Timing Characteristics				
t_{WL}	Timer Pulsewidth Input Low[1]	1		SCLK cycles
t_{WH}	Timer Pulsewidth Input High[1]	1		SCLK cycles
Switching Characteristic				
t_{HTO}	Timer Pulsewidth Output[2]	1	$(2^{32}-1)$	SCLK cycles

[1] The minimum pulsewidths apply for TMRx input pins in width capture and external clock modes. They also apply to the PF1 or PPICLK input pins in PWM output mode.
[2] The minimum time for t_{HTO} is one cycle, and the maximum time for t_{HTO} equals $(2^{32}-1)$ cycles.

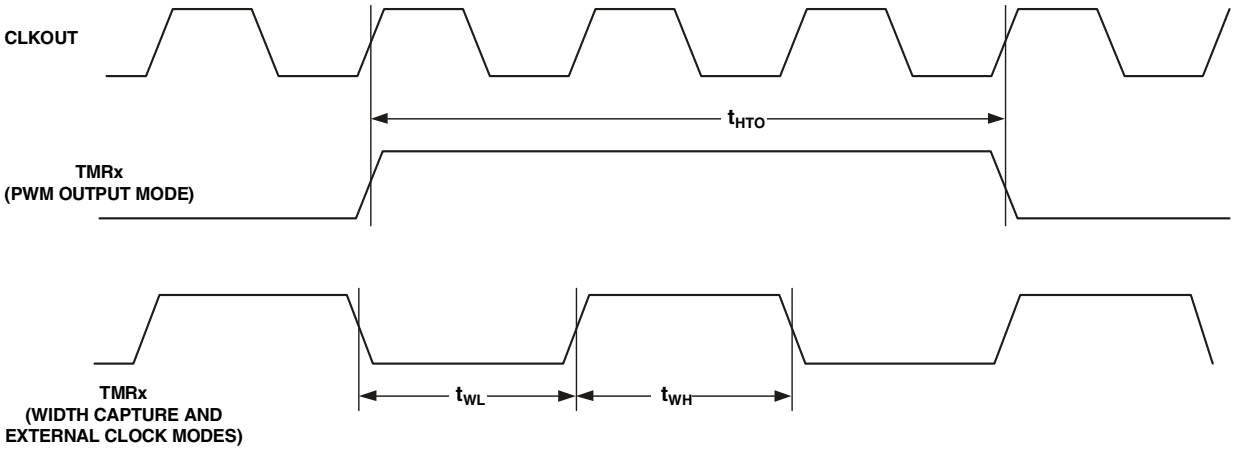

Figure 19. Timer PWM_OUT Cycle Timing

Programmable Flags Cycle Timing

Table 28 and Figure 20 describe programmable flag operations.

Table 28. Programmable Flags Cycle Timing

Parameter		Min	Max	Unit
Timing Requirement				
t_{WFI}	Flag input pulsewidth	t_{SCLK} + 1		ns
Switching Characteristic				
t_{DFO}	Flag output delay from CLKOUT low		TBD	ns

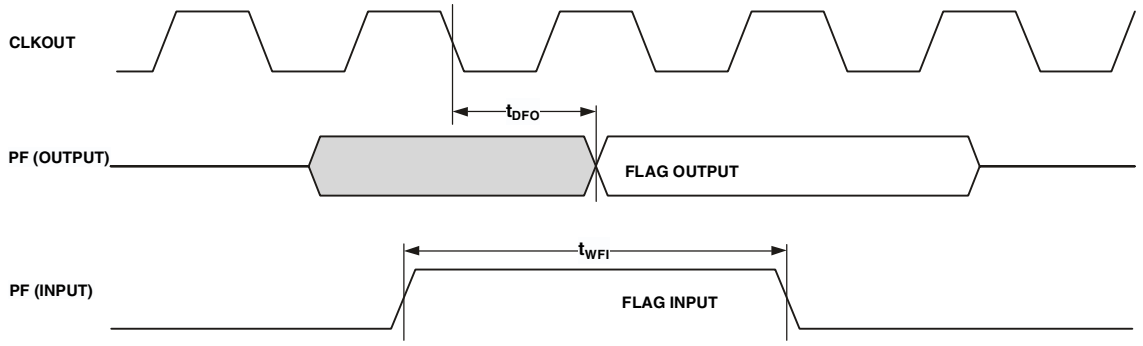

Figure 20. Programmable Flags Cycle Timing

JTAG Test And Emulation Port Timing

Table 29 and Figure 21 describe JTAG port operations.

Table 29. JTAG Port Timing

Parameter		Min	Max	Unit
Timing Parameters				
t_{TCK}	TCK Period	20		ns
t_{STAP}	TDI, TMS Setup Before TCK High	4		ns
t_{HTAP}	TDI, TMS Hold After TCK High	4		ns
t_{SSYS}	System Inputs Setup Before TCK High[1]	4		ns
t_{HSYS}	System Inputs Hold After TCK High[1]	5		ns
t_{TRSTW}	$\overline{TRST}$ Pulsewidth[2]	4		TCK cycles
Switching Characteristics				
t_{DTDO}	TDO Delay from TCK Low		10	ns
t_{DSYS}	System Outputs Delay After TCK Low[3]	0	12	ns

[1] System Inputs=DATA31-0, ARDY, TMR2-0, PF47-0, PPIx_CLK, RSCLK0-1, RFS0-1, DR0PRI, DR0SEC, TSCLK0-1, TFS0-1, DR1PRI, DR1SEC, MOSI, MISO, SCK, RX, $\overline{RESET}$, NMI, BMODE1-0, $\overline{BR}$, PPIxD7-0.

[2] 50 MHz max.

[3] System Outputs=DATA31-0, ADDR25-2, $\overline{ABE3-0}$, $\overline{AOE}$, $\overline{ARE}$, $\overline{AWE}$, $\overline{AMS3-0}$, $\overline{SRAS}$, $\overline{SCAS}$, $\overline{SWE}$, SCKE, CLKOUT, SA10, $\overline{SMS3-0}$, PF47-0, RSCLK0-1, RFS0-1, TSCLK0-1, TFS0-1, DT0PRI, DT0SEC, DT1PRI, DT1SEC, MOSI, MISO, SCK, TX, $\overline{BG}$, $\overline{BGH}$, PPIxD7-0.

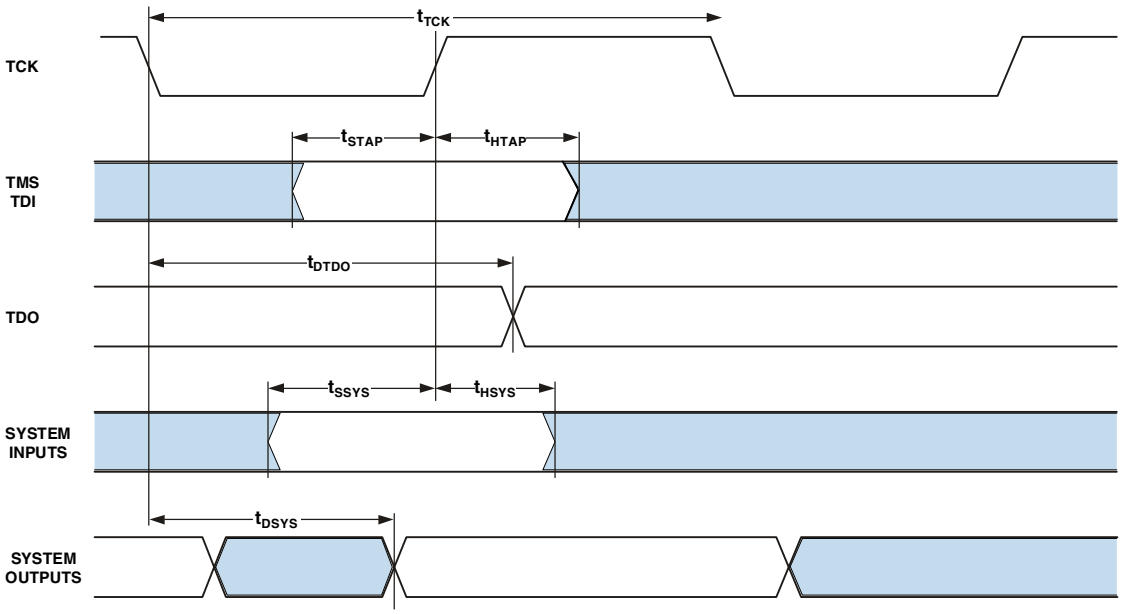

Figure 21. JTAG Port Timing

POWER DISSIPATION

Total power dissipation has two components, one due to internal circuitry (P_{INT}) and one due to the switching of external output drivers (P_{EXT}). Table 30 shows the power dissipation for internal circuitry (V_{DDINT}). Internal power dissipation is dependent on the instruction execution sequence and the data operands involved.

Table 30. Internal Power Dissipation

Parameter	Test Conditions[1]				Unit
	f_{CCLK} = 50 MHz V_{DDINT} = 0.8 V	f_{CCLK} = 400 MHz V_{DDINT} = 1.2 V	f_{CCLK} = 600 MHz V_{DDINT} = 1.2 V	f_{CCLK} = 600 MHz V_{DDINT} = 1.35 V	
I_{DDTYP}[2]	TBD	TBD	520	TBD	mA
$I_{DDSLEEP}$[3]	TBD	TBD	TBD	TBD	mA
$I_{DDDEEPSLEEP}$[3]	TBD	TBD	70	TBD	mA
$I_{DDHIBERNATE}$[4]	TBD	TBD	TBD	TBD	µA

[1] I_{DD} data is specified for typical process parameters. All data at 25°C.
[2] Processor executing 75% dual Mac, 25% ADD with moderate data bus activity.
[3] See the *ADSP-BF53x Blackfin Processor Hardware Reference Manual* for definitions of Sleep and Deep Sleep operating modes.
[4] Measured at V_{DDEXT} = 3.65V with voltage regulator off (V_{DDINT} = 0V).

The external component of total power dissipation is caused by the switching of output pins. Its magnitude depends on

- The number of output pins that switch during each cycle (O)
- The maximum frequency at which they can switch (f)
- Their load capacitance (C)
- Their voltage swing (V_{DDEXT})

The external component is calculated using:

$$P_{EXT} = O \times C \times V^2_{DD} \times f$$

The frequency f includes driving the load high and then back low. For example: DATA15–0 pins can drive high and low at a maximum rate of $1/(23t_{SCLK})$ while in SDRAM burst mode.

A typical power consumption can now be calculated for these conditions by adding a typical internal power dissipation.

$$P_{Total} = P_{EXT} + (I_{DD} \times V_{DDINT})$$

Note that the conditions causing a worst-case P_{EXT} differ from those causing a worst-case P_{INT}. Maximum P_{INT} cannot occur while 100% of the output pins are switching from all ones (1s) to all zeros (0s). Note also that it is not common for an application to have 100%,or even 50%, of the outputs switching simultaneously.

OUTPUT DRIVE CURRENTS

Figure 22 shows typical I-V characteristics for the output drivers of the ADSP-BF561. The curves represent the current drive capability of the output drivers as a function of output voltage.

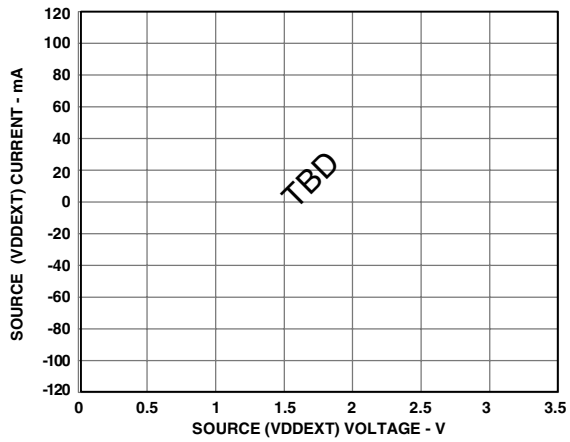

Figure 22. ADSP-BF561 Typical Drive

TEST CONDITIONS

The ac signal specifications (timing parameters) appear in Timing Specifications on Page 22. These include output disable time, output enable time, and capacitive loading. The timing specifications for the DSP apply for the voltage reference levels in Figure 23.

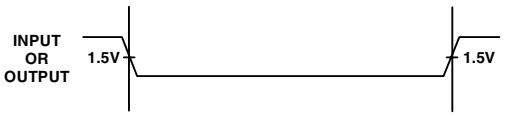

Figure 23. Voltage Reference Levels for AC Measurements (Except Output Enable/Disable)

Output Enable Time

Output pins are considered to be enabled when they have made a transition from a high impedance state to the point when they start driving. The output enable time t_{ENA} is the interval from the point when a reference signal reaches a high or low voltage level to the point when the output starts driving as shown in the Output Enable/Disable diagram (Figure 24). The time $t_{ENA_MEASURED}$ is the interval from when the reference signal switches to when the output voltage reaches 2.0V (output high) or 1.0V (output low). Time t_{TRIP} is the interval from when the output starts driving to when the output reaches the 1.0V or 2.0V trip voltage. Time t_{ENA} is calculated as $t_{ENA_MEASURED}-t_{TRIP}$. If multiple pins (such as the data bus) are enabled, the measurement value is that of the first pin to start driving.

Output Disable Time

Output pins are considered to be disabled when they stop driving, go into a high impedance state, and start to decay from their output high or low voltage. The time for the voltage on the bus to decay by **Δ**V is dependent on the capacitive load, C_L and the load current, I_L. This decay time can be approximated by the following equation:

$$t_{DECAY} = (C_L \Delta V)/I_L$$

The output disable time t_{DIS} is the difference between $t_{DIS_MEASURED}$ and t_{DECAY} as shown in Figure 24.The time $t_{DIS_MEASURED}$ is the interval from when the reference signal switches to when the output voltage decays **Δ**V from the measured output high or output low voltage. t_{DECAY} is calculated with test loads C_L and I_L, and with **Δ**V equal to 0.5 V.

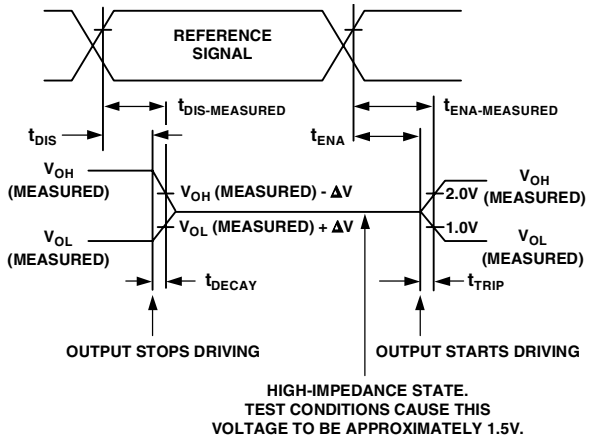

Figure 24. Output Enable/Disable

EXAMPLE SYSTEM HOLD TIME CALCULATION

To determine the data output hold time in a particular system, first calculate t_{DECAY} using the equation given above. Choose **Δ**V to be the difference between the ADSP-BF561's output voltage and the input threshold for the device requiring the hold time. A typical **Δ**V will be 0.4 V. CL is the total bus capacitance (per data line), and IL is the total leakage or three-state current (per data line). The hold time will be t_{DECAY} plus the minimum disable time (i.e., t_{DSDAT} for an SDRAM write cycle).

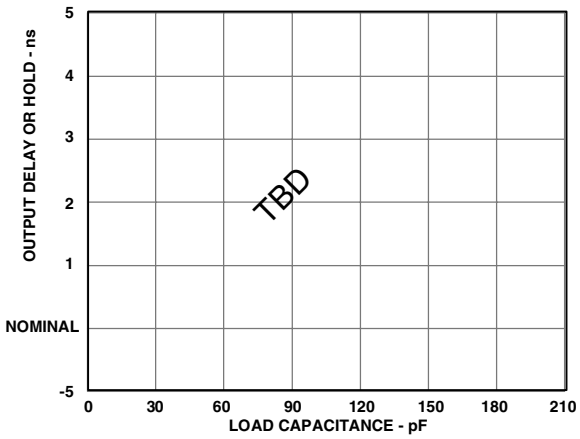

Figure 25. Typical Output Delay or Hold vs. Load Capacitance (at Max Case Temperature)

CAPACITIVE LOADING

Output delays and holds are based on standard capacitive loads: 30 pF on all pins (see Figure 26 on Page 44). Figure 25 shows graphically how output delays and holds vary with load capacitance (Note that this graph or derating does not apply to output disable delays; see Output Disable Time on Page 43). The graphs of Figure 25, Figure 27 and Figure 28 may not be linear outside the ranges shown, for Typical Output Delay vs. Load Capacitance and Typical Output Rise Time (10%-90%, V=Min) vs. Load Capacitance.

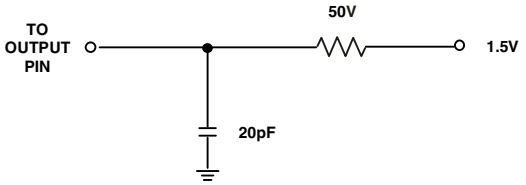

Figure 26. Equivalent Device Loading for AC Measurements (Includes All Fixtures)

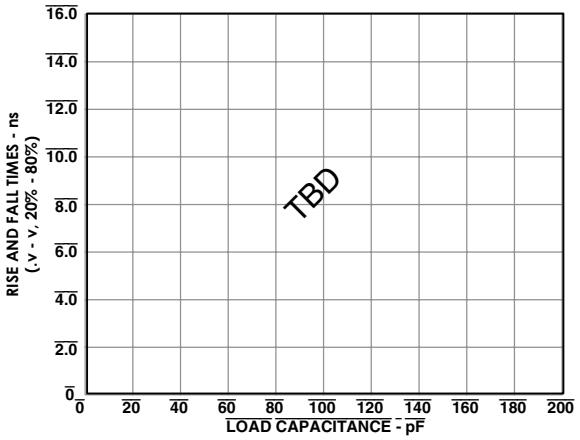

Figure 27. Typical Output Rise/Fall Time (10%-90%, Vddext = Max)

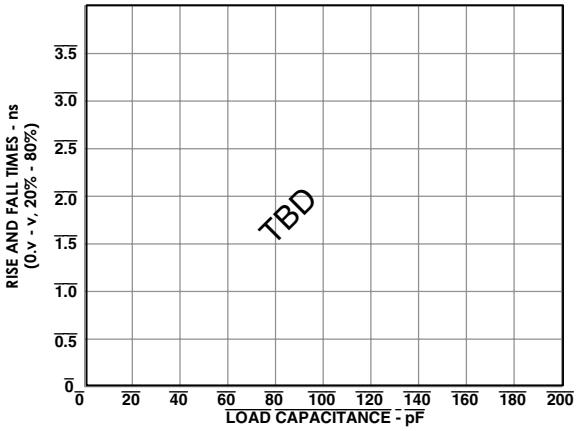

Figure 28. Typical Output Rise/Fall Time (10%-90%, Vddext = Min)

256-BALL MBGA PIN CONFIGURATIONS

Table 31. 256-Lead MBGA Pin Assignments

MBGA Pin No.	Pin Name	MBGA Pin No.	Pin Name	MBGA Pin No.	Pin Name	MBGA Pin No.	Pin Name
A01	VDDEXT	B01	PPI2CLK	C01	PPI1SYNC2/TMR9	D01	PPI1D13/PF45
A02	ADDR24	B02	ADDR22	C02	PPI1CLK	D02	PPI1D15/PF47
A03	ADDR20	B03	ADDR18	C03	ADDR25	D03	PPI1SYNC3
A04	VDDEXT	B04	ADDR16	C04	ADDR19	D04	ADDR23
A05	ADDR14	B05	ADDR12	C05	GND	D05	GND
A06	ADDR10	B06	VDDEXT	C06	ADDR11	D06	GND
A07	$\overline{\text{AMS3}}$	B07	$\overline{\text{AMS1}}$	C07	$\overline{\text{AOE}}$	D07	ADDR09
A08	$\overline{\text{AWE}}$	B08	$\overline{\text{ARE}}$	C08	$\overline{\text{AMS0}}$	D08	GND
A09	VDDEXT	B09	$\overline{\text{SMS1}}$	C09	$\overline{\text{SMS2}}$	D09	ARDY
A10	$\overline{\text{SMS3}}$	B10	SCKE	C10	$\overline{\text{SRAS}}$	D10	$\overline{\text{SCAS}}$
A11	SCLK0/CLKOUT	B11	VDDEXT	C11	GND	D11	SA10
A12	SCLK1	B12	$\overline{\text{BR}}$	C12	$\overline{\text{BGH}}$	D12	VDDEXT
A13	$\overline{\text{BG}}$	B13	$\overline{\text{ABE1}}$/SDQM1	C13	GND	D13	ADDR02
A14	$\overline{\text{ABE2}}$/SDQM2	B14	ADDR06	C14	ADDR07	D14	GND
A15	$\overline{\text{ABE3}}$/SDQM3	B15	ADDR04	C15	DATA1	D15	DATA5
A16	VDDEXT	B16	DATA0	C16	DATA3	D16	DATA6
E01	GND	F01	CLKIN	G01	XTAL	H01	GND
E02	PPI1D11/PF43	F02	VDDEXT	G02	GND	H02	GND
E03	PPI1D12/PF44	F03	$\overline{\text{RESET}}$	G03	VDDEXT	H03	PPI1D9/PF41
E04	PPI1SYNC1/TMR8	F04	PPI1D10/PF42	G04	BYPASS	H04	PPI1D7
E05	ADDR15	F05	ADDR21	G05	PPI1D14/PF46	H05	PPI1D5
E06	ADDR13	F06	ADDR17	G06	GND	H06	VDDINT
E07	$\overline{\text{AMS2}}$	F07	VDDINT	G07	GND	H07	VDDINT
E08	VDDINT	F08	GND	G08	GND	H08	GND
E09	$\overline{\text{SMS0}}$	F09	VDDINT	G09	VDDINT	H09	GND
E10	$\overline{\text{SWE}}$	F10	GND	G10	ADDR05	H10	GND
E11	$\overline{\text{ABE0}}$/SDQM0	F11	ADDR08	G11	ADDR03	H11	VDDINT
E12	DATA2	F12	DATA10	G12	DATA15	H12	DATA16
E13	GND	F13	DATA8	G13	DATA14	H13	DATA18
E14	DATA4	F14	DATA12	G14	GND	H14	DATA20
E15	DATA7	F15	DATA9	G15	DATA13	H15	DATA17
E16	VDDEXT	F16	DATA11	G16	VDDEXT	H16	DATA19

Table 31. 256-Lead MBGA Pin Assignments (Continued)

MBGA Pin No.	Pin Name	MBGA Pin No.	Pin Name	MBGA Pin No.	Pin Name	MBGA Pin No.	Pin Name
J01	VROUT0	K01	PPI1D6	L01	PPI1D0	M01	PPI2D15/PF39
J02	VROUT1	K02	PPI1D4	L02	PPI2SYNC2/TMR11	M02	PPI2D13/PF37
J03	PPI1D2	K03	PPI1D8/PF40	L03	GND	M03	PPI2D9/PF33
J04	PPI1D3	K04	PPI2SYNC1/TMR10	L04	PPI2SYNC3	M04	GND
J05	PPI1D1	K05	PPI2D14/PF38	L05	VDDEXT	M05	NC
J06	VDDEXT	K06	VDDEXT	L06	PPI2D11/PF35	M06	PF3/SPISEL3/TMR3
J07	GND	K07	GND	L07	GND	M07	PF7/SPISEL7/TMR7
J08	VDDINT	K08	VDDINT	L08	VDDINT	M08	VDDINT
J09	VDDINT	K09	GND	L09	GND	M09	GND
J10	VDDINT	K10	GND	L10	VDDEXT	M10	BMODE0
J11	GND	K11	VDDINT	L11	GND	M11	SCK
J12	DATA30	K12	DATA28	L12	DR0PRI	M12	DR1PRI
J13	DATA22	K13	DATA26	L13	TFS0/PF16	M13	NC
J14	GND	K14	DATA24	L14	GND	M14	VDDEXT
J15	DATA21	K15	DATA25	L15	DATA27	M15	DATA31
J16	DATA23	K16	VDDEXT	L16	DATA29	M16	DT0PRI/PF18
N01	PPI2D12/PF36	P01	PPI2D8/PF32	R01	PPI2D7	T01	VDDEXT
N02	PPI2D10/PF34	P02	GND	R02	PPI2D6	T02	PPI2D4
N03	PPI2D3	P03	PPI2D5	R03	PPI2D2	T03	VDDEXT
N04	PPI2D1	P04	PF0/SPISS/TMR0	R04	PPI2D0	T04	PF2/SPISEL2/TMR2
N05	PF1/SPISEL1/TMR1	P05	GND	R05	PF4/SPISEL4/TMR4	T05	PF6/SPISEL6/TMR6
N06	PF9	P06	PF5/SPISEL5/TMR5	R06	PF8	T06	VDDEXT
N07	GND	P07	PF11	R07	PF10	T07	PF12
N08	PF13	P08	PF15/EXTCLK	R08	PF14	T08	VDDEXT
N09	TDO	P09	GND	R09	NMI1	T09	TCK
N10	BMODE1	P10	$\overline{\text{TRST}}$	R10	TDI	T10	TMS
N11	MOSI	P11	NMI0	R11	$\overline{\text{BR}}$	T11	SLEEP
N12	GND	P12	GND	R12	MISO	T12	VDDEXT
N13	RFS1/PF24	P13	RSCLK1/PF30	R13	TX/PF26	T13	RX/PF27
N14	GND	P14	TFS1/PF21	R14	TSCLK1/PF31	T14	DR1SEC/PF25
N15	DT0SEC/PF17	P15	RSCLK0/PF28	R15	DT1PRI/PF23	T15	DT1SEC/PF22
N16	TSCLK0/PF29	P16	DR0SEC/PF20	R16	RFS0/PF19	T16	VDDEXT

297-BALL PBGA PIN CONFIGURATIONS

Table 32. 297-Lead PBGA Pin Assignments

MBGA Pin No.	Pin Name	MBGA Pin No.	Pin Name	MBGA Pin No.	Pin Name	MBGA Pin No.	Pin Name
A01	GND	AB03	GND	AE11	PF12	AF17	SLEEP
A02	ADDR25	AB24	GND	AE12	PF14	AF18	NMI0
A03	ADDR23	AB25	TFS0/PF16	AE13	NC	AF19	SCK
A04	ADDR21	AB26	DR0PRI	AE14	TDO	AF20	TX/PF26
A05	ADDR19	AC01	PPI2D9/PF33	AE15	$\overline{\text{TRST}}$	AF21	RSCLK1/PF30
A06	ADDR17	AC02	PPI2D8/PF32	AE16	$\overline{\text{EMU}}$	AF22	DR1PRI
A07	ADDR15	AC03	GND	AE17	BMODE1	AF23	TSCLK1/PF31
A08	ADDR13	AC04	GND	AE18	BMODE0	AF24	DT1SEC/PF22
A09	ADDR11	AC23	GND	AE19	MISO	AF25	DT1PRI/PF23
A10	ADDR09	AC24	GND	AE20	MOSI	AF26	GND
A11	$\overline{\text{AMS3}}$	AC25	DR0SEC/PF20	AE21	RX/PF27	B01	PPI2CLK
A12	$\overline{\text{AMS1}}$	AC26	RFS0/PF19	AE22	RFS1/PF24	B02	GND
A13	$\overline{\text{AWE}}$	AD01	PPI2D7	AE23	DR1SEC/PF25	B03	ADDR24
A14	$\overline{\text{ARE}}$	AD02	PPI2D6	AE24	TFS1/PF21	B04	ADDR22
A15	$\overline{\text{SMS0}}$	AD03	GND	AE25	GND	B05	ADDR20
A16	$\overline{\text{SMS2}}$	AD04	GND	AE26	NC	B06	ADDR18
A17	$\overline{\text{SRAS}}$	AD05	GND	AF01	GND	B07	ADDR16
A18	$\overline{\text{SCAS}}$	AD22	GND	AF02	PPI2D4	B08	ADDR14
A19	SCLK0/CLKOUT	AD23	GND	AF03	PPI2D2	B09	ADDR12
A20	SCLK1	AD24	GND	AF04	PPI2D0	B10	ADDR10
A21	$\overline{\text{BGH}}$	AD25	NC	AF05	PF1/SPISEL1/TMR1	B11	$\overline{\text{AMS2}}$
A22	$\overline{\text{ABE0}}$/SDQM0	AD26	RSCLK0/PF28	AF06	PF3/SPISEL3/TMR3	B12	$\overline{\text{AMS0}}$
A23	$\overline{\text{ABE2}}$/SDQM2	AE01	PPI2D5	AF07	PF5/SPISEL5/TMR5	B13	$\overline{\text{AOE}}$
A24	ADDR08	AE02	GND	AF08	PF7/SPISEL7/TMR7	B14	ARDY
A25	ADDR06	AE03	PPI2D3	AF09	PF9	B15	$\overline{\text{SMS1}}$
A26	GND	AE04	PPI2D1	AF10	PF11	B16	$\overline{\text{SMS3}}$
AA01	PPI2D13/PF37	AE05	PF0/SPISS/TMR0	AF11	PF13	B17	SCKE
AA02	PPI2D12/PF36	AE06	PF2/SPISEL2/TMR2	AF12	PF15/EXT CLK	B18	$\overline{\text{SWE}}$
AA25	DT0SEC/PF17	AE07	PF4/SPISEL4/TMR4	AF13	NMI1	B19	SA10
AA26	TSCLK0/PF29	AE08	PF6/SPISEL6/TMR6	AF14	TCK	B20	$\overline{\text{BR}}$
AB01	PPI2D11/PF35	AE09	PF8	AF15	TDI	B21	$\overline{\text{BG}}$
AB02	PPI2D10/PF34	AE10	PF10	AF16	TMS	B22	$\overline{\text{ABE1}}$/SDQM1

Table 32. 297-Lead PBGA Pin Assignments (Continued)

MBGA Pin No.	Pin Name	MBGA Pin No.	Pin Name	MBGA Pin No.	Pin Name	MBGA Pin No.	Pin Name
B23	$\overline{\text{ABE3}}$/SDQM3	G01	PPI1D11/PF43	K25	DATA10	N12	GND
B24	ADDR07	G02	PPI1D10/PF42	K26	DATA13	N13	GND
B25	GND	G25	DATA4	L01	NC	N14	GND
B26	ADDR05	G26	DATA7	L02	NC	N15	GND
C01	PPI1SYNC3	H01	BYPASS	L10	VDDEXT	N16	GND
C02	PPI1CLK	H02	$\overline{\text{RESET}}$	L11	GND	N17	GND
C03	GND	H25	DATA6	L12	GND	N18	VDDINT
C04	GND	H26	DATA9	L13	GND	N25	DATA16
C05	GND	J01	CLKIN	L14	GND	N26	DATA19
C22	GND	J02	GND	L15	GND	P01	PPI1D7
C23	GND	J10	VDDEXT	L16	GND	P02	PPI1D8/PF40
C24	GND	J11	VDDEXT	L17	GND	P10	VDDEXT
C25	ADDR04	J12	VDDEXT	L18	VDDINT	P11	GND
C26	ADDR03	J13	VDDEXT	L25	DATA12	P12	GND
D01	PPI1SYNC1/TMR8	J14	VDDEXT	L26	DATA15	P13	GND
D02	PPI1SYNC2/TMR9	J15	VDDEXT	M01	VROUT0	P14	GND
D03	GND	J16	VDDINT	M02	GND	P15	GND
D04	GND	J17	VDDINT	M10	VDDEXT	P16	GND
D23	GND	J18	VDDINT	M11	GND	P17	GND
D24	GND	J25	DATA8	M12	GND	P18	VDDINT
D25	ADDR02	J26	DATA11	M13	GND	P25	DATA18
D26	DATA1	K01	XTAL	M14	GND	P26	DATA21
E01	PPI1D15/PF47	K02	NC	M15	GND	R01	PPI1D5
E02	PPI1D14/PF46	K10	VDDEXT	M16	GND	R02	PPI1D6
E03	GND	K11	VDDEXT	M17	GND	R10	VDDEXT
E24	GND	K12	VDDEXT	M18	VDDINT	R11	GND
E25	DATA0	K13	VDDEXT	M25	DATA14	R12	GND
E26	DATA3	K14	VDDEXT	M26	DATA17	R13	GND
F01	PPI1D13/PF45	K15	VDDEXT	N01	VROUT1	R14	GND
F02	PPI1D12/PF44	K16	VDDINT	N02	PPI1D9/PF41	R15	GND
F25	DATA2	K17	VDDINT	N10	VDDEXT	R16	GND
F26	DATA5	K18	VDDINT	N11	GND	R17	GND

Table 32. 297-Lead PBGA Pin Assignments (Continued)

MBGA Pin No.	Pin Name	MBGA Pin No.	Pin Name	MBGA Pin No.	Pin Name	MBGA Pin No.	Pin Name
R18	VDDINT	T16	GND	U14	GND	W01	PPI2SYNC1/TMR10
R25	DATA20	T17	GND	U15	VDDINT	W02	PPI2SYNC2/TMR11
R26	DATA23	T18	VDDINT	U16	VDDINT	W25	DATA28
T01	PPI1D3	T25	DATA22	U17	VDDINT	W26	DATA31
T02	PPI1D4	T26	DATA25	U18	VDDINT	Y01	PPI2D15/PF39
T10	VDDEXT	U01	PPI1D1	U25	DATA24	Y02	PPI2D14/PF38
T11	GND	U02	PPI1D2	U26	DATA27	Y25	DATA30
T12	GND	U10	VDDEXT	V01	PPI2SYNC3	Y26	DT0PRI/PF18
T13	GND	U11	VDDEXT	V02	PPI1D0		
T14	GND	U12	VDDEXT	V25	DATA26		
T15	GND	U13	VDDEXT	V26	DATA29		

OUTLINE DIMENSIONS

Dimensions in the outline dimension figure are shown in millimeters.

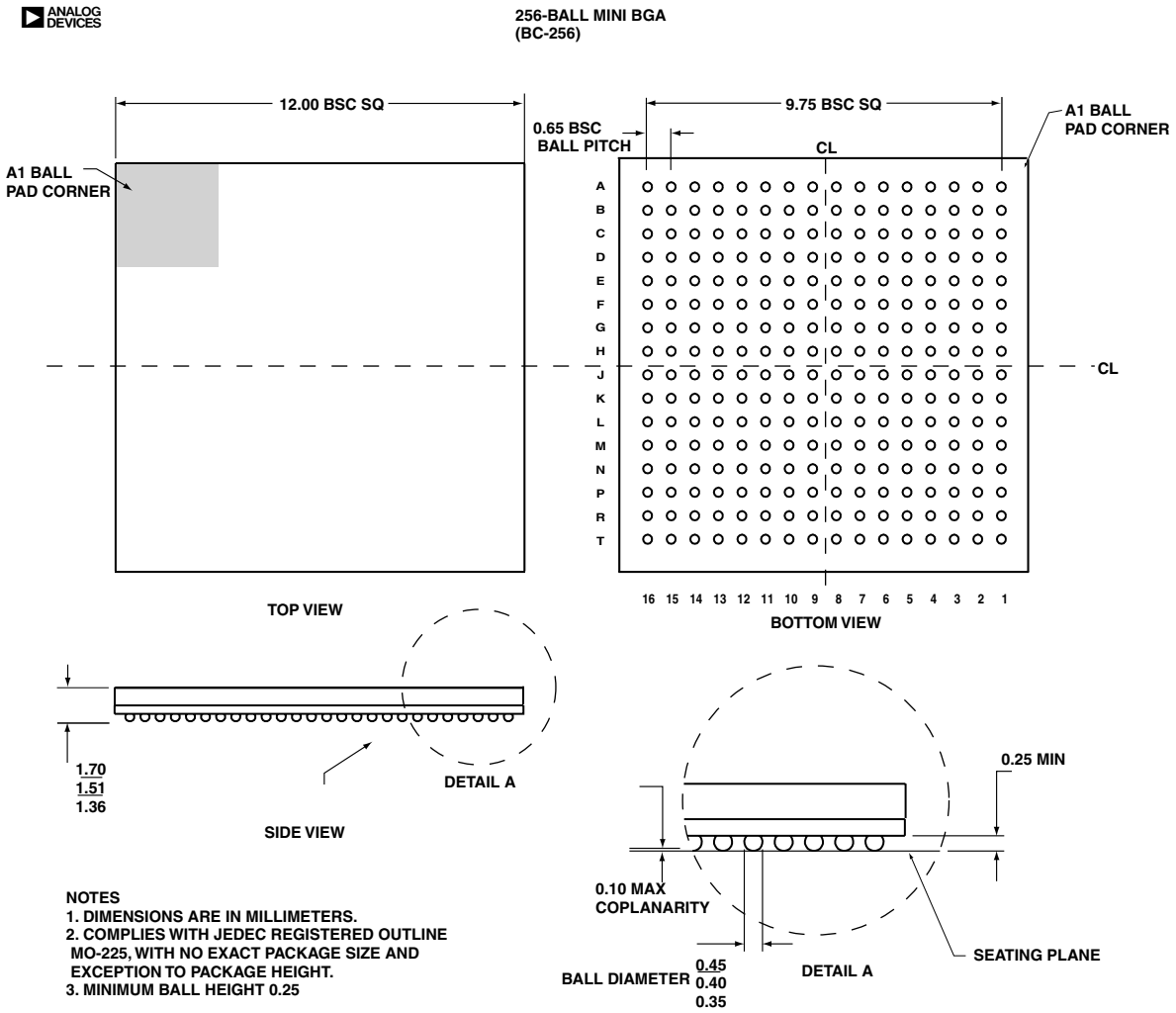

Figure 29. 256-Ball Mini-Ball Grid Array

OUTLINE DIMENSIONS

Dimensions in the outline dimension figure are shown in millimeters.

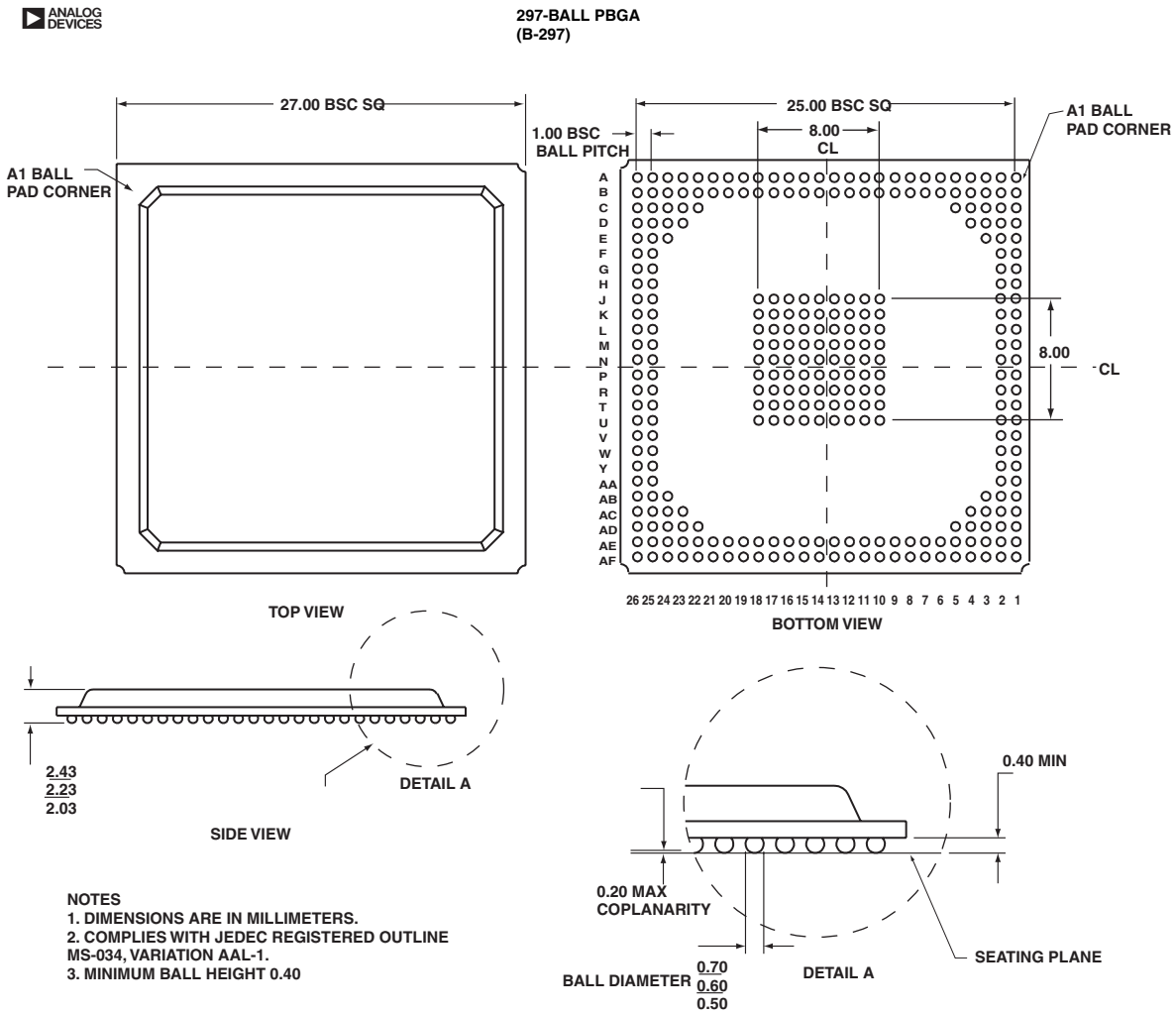

Figure 30. 297-Ball PBGA Grid Array

ORDERING GUIDE

Part Number	Ambient Temperature Range	Instruction Rate	Operating Voltage
ADSP-BF561SKBCZ600	0°C to +70°C	600 MHz	0.8 V to 1.2 V internal, 2.5 V or 3.3 V I/O
ADSP-BF561SKBCZ500	0°C to +70°C	500 MHz	0.8 V to 1.2 V internal, 2.5 V or 3.3 V I/O
ADSP-BF561SBB500	-40°C to +85°C	500 MHz	0.8 V to 1.2 V internal, 2.5 V or 3.3 V I/O