DISCRETE SEMICONDUCTORS

DATA SHEET

BFS540
NPN 9 GHz wideband transistor

Product specification
File under Discrete Semiconductors, SC14

November 1992

Philips Semiconductors

PHILIPS

NPN 9 GHz wideband transistor BFS540

FEATURES

- High power gain
- Low noise figure
- High transition frequency
- Gold metallization ensures excellent reliability
- SOT323 envelope.

PINNING

PIN	DESCRIPTION
Code: N4	
1	base
2	emitter
3	collector

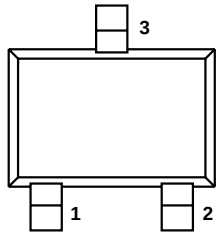

Top view MBC870

Fig.1 SOT323.

DESCRIPTION

NPN transistor in a plastic SOT323 envelope.

It is intended for RF wideband amplifier applications such as satellite TV systems and RF portable communication equipment with signal frequencies up to 2 GHz.

QUICK REFERENCE DATA

SYMBOL	PARAMETER	CONDITIONS	MIN.	TYP.	MAX.	UNIT
V_{CBO}	collector-base voltage	open emitter	–	–	20	V
V_{CEO}	collector-emitter voltage	open base	–	–	15	V
I_C	DC collector current		–	–	120	mA
P_{tot}	total power dissipation	up to T_s = 80 °C; note 1	–	–	500	mW
h_{FE}	DC current gain	I_C = 40 mA; V_{CE} = 8 V; T_j = 25 °C	60	120	250	
f_T	transition frequency	I_C = 40 mA; V_{CE} = 8 V; f = 1 GHz; T_{amb} = 25 °C	–	9	–	GHz
G_{UM}	maximum unilateral power gain	I_C = 40 mA; V_{CE} = 8 V; f = 900 MHz; T_{amb} = 25 °C	–	14	–	dB
F	noise figure	I_C = 10 mA; V_{CE} = 8 V; f = 900 MHz; T_{amb} = 25 °C	–	1.3	1.7	dB

LIMITING VALUES

In accordance with the Absolute Maximum System (IEC 134).

SYMBOL	PARAMETER	CONDITIONS	MIN.	MAX.	UNIT
V_{CBO}	collector-base voltage	open emitter	–	20	V
V_{CES}	collector-emitter voltage	R_{BE} = 0	–	15	V
V_{EBO}	emitter-base voltage	open collector	–	2.5	V
I_C	DC collector current		–	120	mA
P_{tot}	total power dissipation	up to T_s = 80 °C; note 1	–	500	mW
T_{stg}	storage temperature		–65	150	°C
T_j	junction temperature		–	175	°C

Note

1. T_s is the temperature at the soldering point of the collector tab.

THERMAL RESISTANCE

SYMBOL	PARAMETER	CONDITIONS	THERMAL RESISTANCE
$R_{th\ j\text{-}s}$	thermal resistance from junction to soldering point	up to T_s = 80 °C; note 1	190 K/W

Note

1. T_s is the temperature at the soldering point of the collector tab.

CHARACTERISTICS

T_j = 25 °C, unless otherwise specified.

SYMBOL	PARAMETER	CONDITIONS	MIN.	TYP.	MAX.	UNIT
I_{CBO}	collector cut-off current	I_E = 0; V_{CE} = 8 V	–	–	50	nA
h_{FE}	DC current gain	I_C = 40 mA; V_{CE} = 8 V	60	120	250	
C_e	emitter capacitance	$I_C = i_c$ = 0; V_{EB} = 0.5 V; f = 1 MHz	–	2	–	pF
C_c	collector capacitance	$I_E = i_e$ = 0; V_{CB} = 8 V; f = 1 MHz	–	0.9	–	pF
C_{re}	feedback capacitance	I_C = 0; V_{CB} = 8 V; f = 1 MHz	–	0.6	–	pF
f_T	transition frequency	I_C = 40 mA; V_{CE} = 8 V; f = 1 GHz; T_{amb} = 25 °C	–	9	–	GHz
G_{UM}	maximum unilateral power gain (note 1)	I_C = 40 mA; V_{CE} = 8 V; f = 900 MHz; T_{amb} = 25 °C	–	14	–	dB
		I_C = 40 mA; V_{CE} = 8 V; f = 2 GHz; T_{amb} = 25 °C	–	8	–	dB
$\|S_{21}\|^2$	insertion power gain	I_C = 40 mA; V_{CE} = 8 V; f = 900 MHz; T_{amb} = 25 °C	12	13	–	dB
F	noise figure	$\Gamma_s = \Gamma_{opt}$; I_C = 10 mA; V_{CE} = 8 V; f = 900 MHz; T_{amb} = 25 °C	–	1.3	1.8	dB
		$\Gamma_s = \Gamma_{opt}$; I_C = 40 mA; V_{CE} = 8 V; f = 900 MHz; T_{amb} = 25 °C	–	1.9	2.4	dB
		$\Gamma_s = \Gamma_{opt}$; I_C = 10 mA; V_{CE} = 8 V; f = 2 GHz; T_{amb} = 25 °C	–	2.1	–	dB
P_{L1}	output power at 1 dB gain compression	I_c = 40 mA; V_{CE} = 8 V; R_L = 50 Ω; f = 900 MHz; T_{amb} = 25 °C	–	21	–	dBm
ITO	third order intercept point	note 2	–	34	–	dBm

Notes

1. G_{UM} is the maximum unilateral power gain, assuming S_{12} is zero and

$$G_{UM} = 10 \log \frac{|S_{21}|^2}{\left(1-|S_{11}|^2\right)\left(1-|S_{22}|^2\right)} \text{ dB.}$$

2. I_C = 40 mA; V_{CE} = 8 V; R_L = 50 Ω; f = 900 MHz; T_{amb} = 25 °C; f_p = 900 MHz; f_q = 902 MHz; measured at $f_{(2p-q)}$ = 898 MHz and at $f_{(2q-p)}$ = 904 MHz.

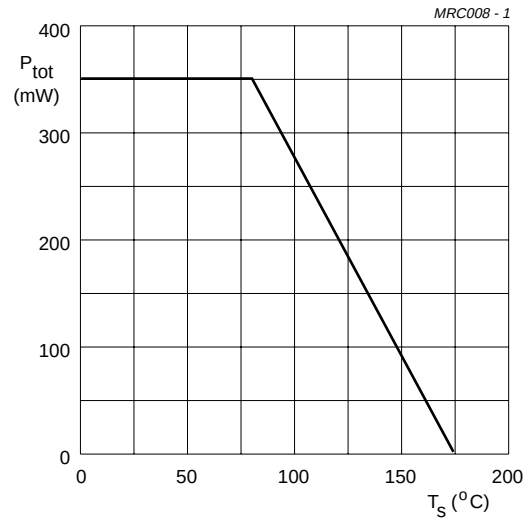

$V_{CE} \leq 10$ V.

Fig.2 Power derating curve.

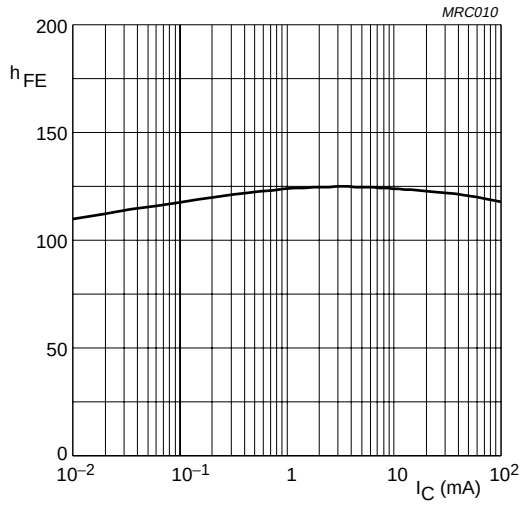

$V_{CE} = 8$ V; $T_j = 25$ °C.

Fig.3 DC current gain as a function of collector current.

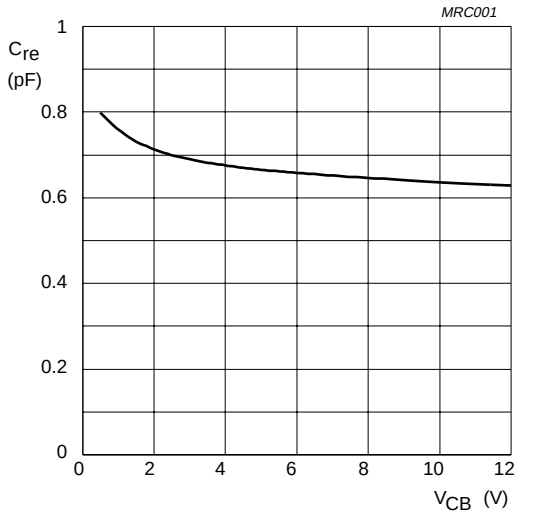

$I_C = 0$; f = 1 MHz.

Fig.4 Feedback capacitance as a function of collector-base voltage.

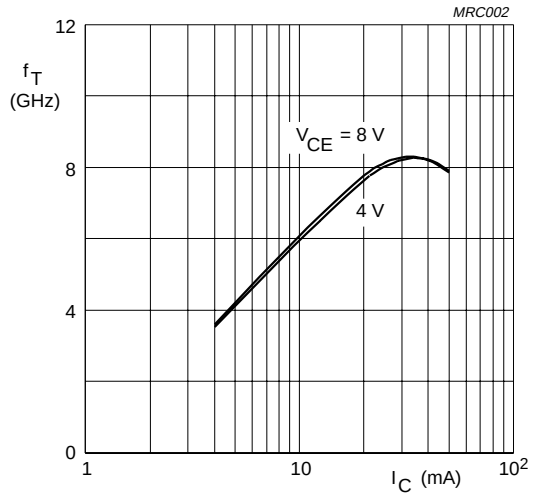

f = 1 GHz; $T_{amb} = 25$ °C.

Fig.5 Transition frequency as a function of collector current.

In Figs 6 to 9, G_{UM} = maximum unilateral power gain; MSG = maximum stable gain; G_{max} = maximum available gain.

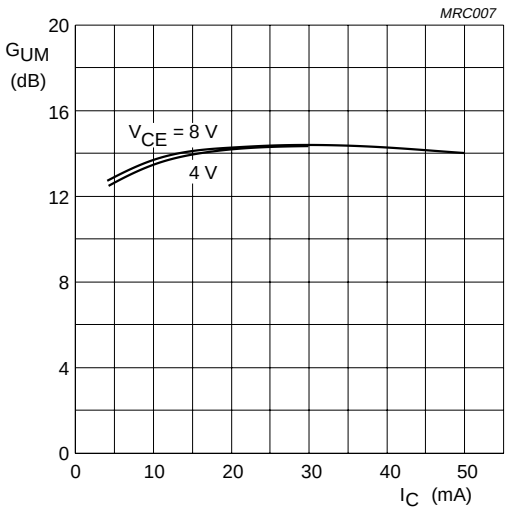

f = 900 MHz; T_{amb} = 25 °C.

Fig.6 Maximum unilateral power gain as a function of collector current.

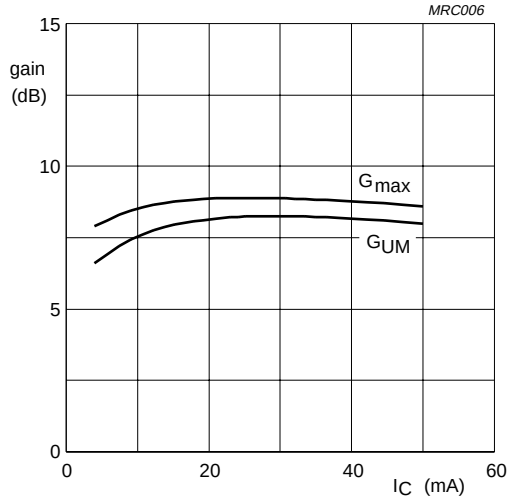

V_{CE} = 8 V; f = 2 GHz; T_{amb} = 25 °C.

Fig.7 Gain as a function of collector current.

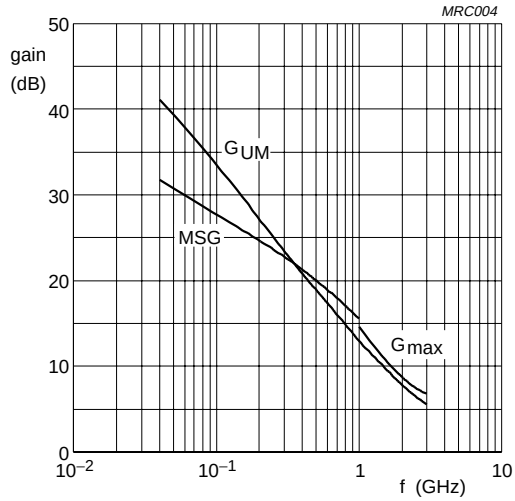

I_C = 10 mA; V_{CE} = 8 V; T_{amb} = 25 °C.

Fig.8 Gain as a function of frequency.

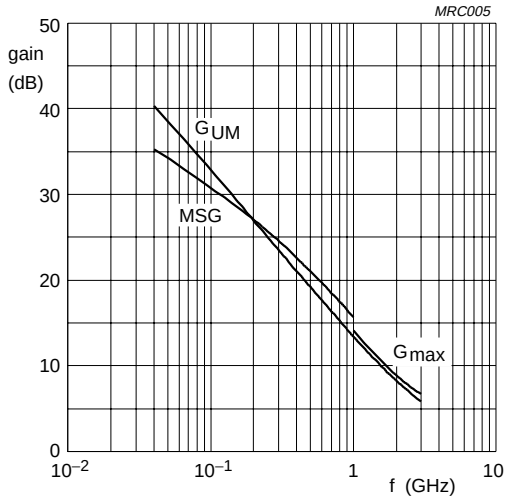

I_C = 40 mA; V_{CE} = 8 V; T_{amb} = 25 °C.

Fig.9 Gain as a function of frequency.

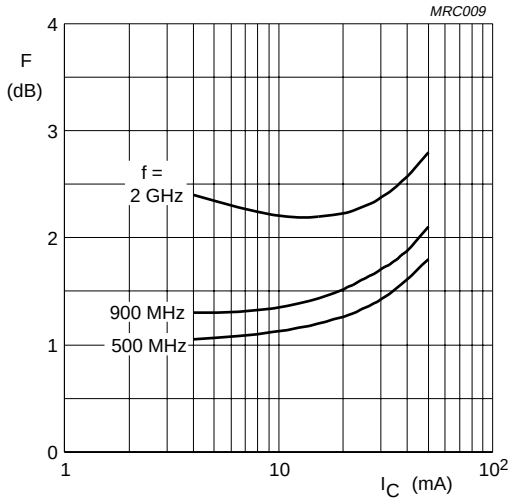

V_{CE} = 8 V; T_{amb} = 25 °C.

Fig.10 Minimum noise figure as a function of collector current.

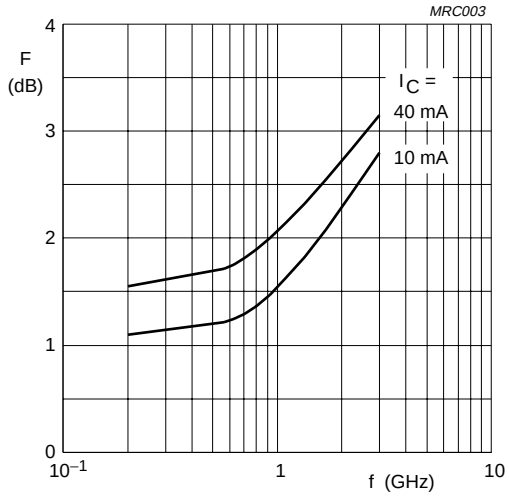

V_{CE} = 8 V; T_{amb} = 25 °C.

Fig.11 Minimum noise figure as a function of frequency.

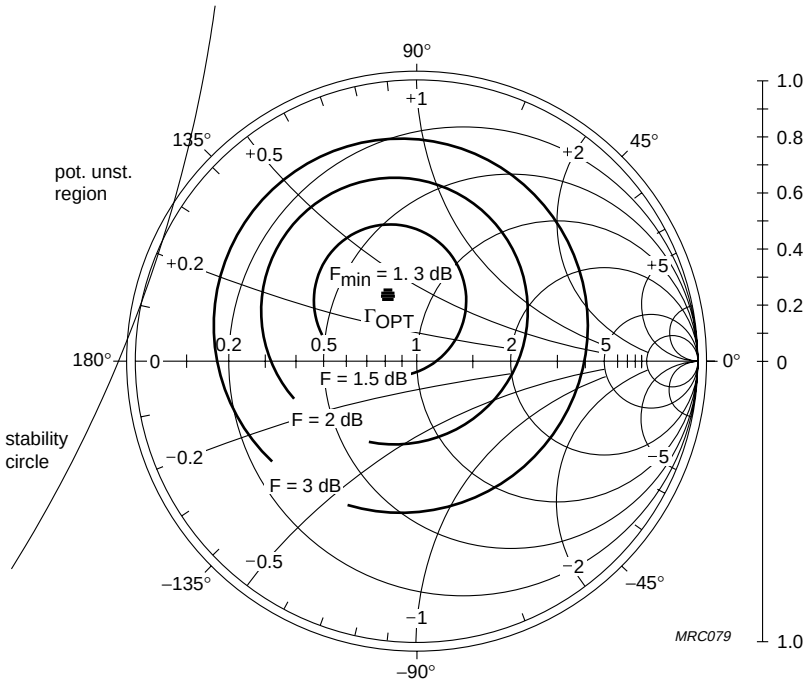

I_C = 10 mA; V_{CE} = 8 V;
f = 900 MHz; Z_o = 50 Ω.

Fig.12 Noise circle.

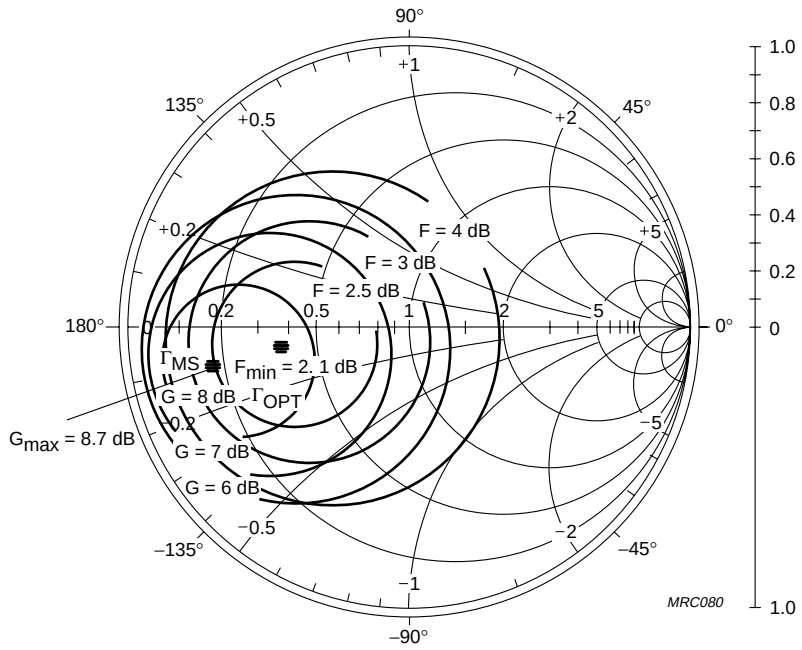

I_C = 10 mA; V_{CE} = 8 V;
f = 2 GHz; Z_o = 50 Ω.

Fig.13 Noise circle.

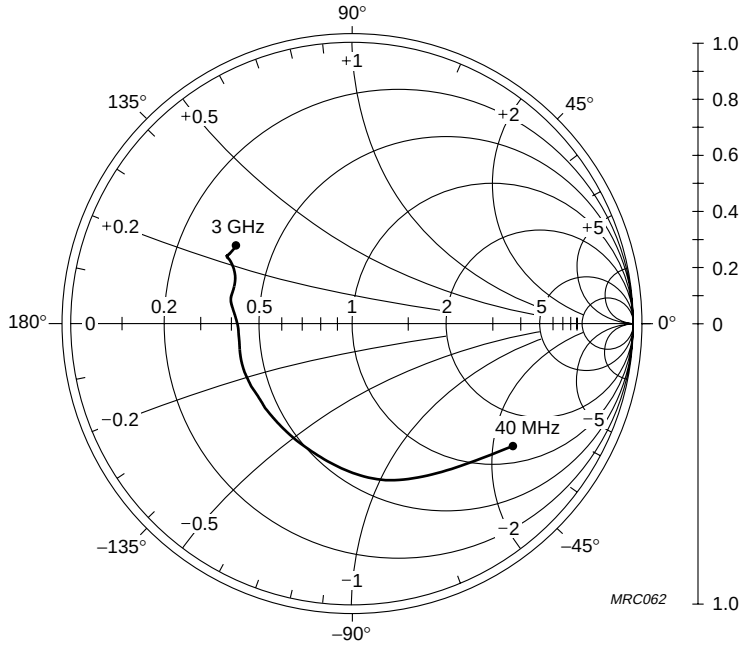

I_C = 40 mA; V_{CE} = 8 V;
Z_o = 50 Ω.

Fig.14 Common emitter input reflection coefficient (S_{11}).

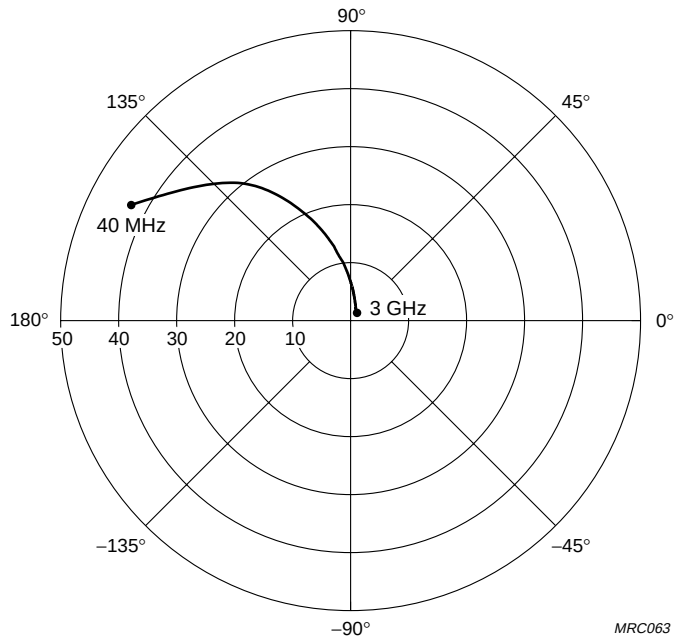

I_C = 40 mA; V_{CE} = 8 V.

Fig.15 Common emitter forward transmission coefficient (S_{21}).

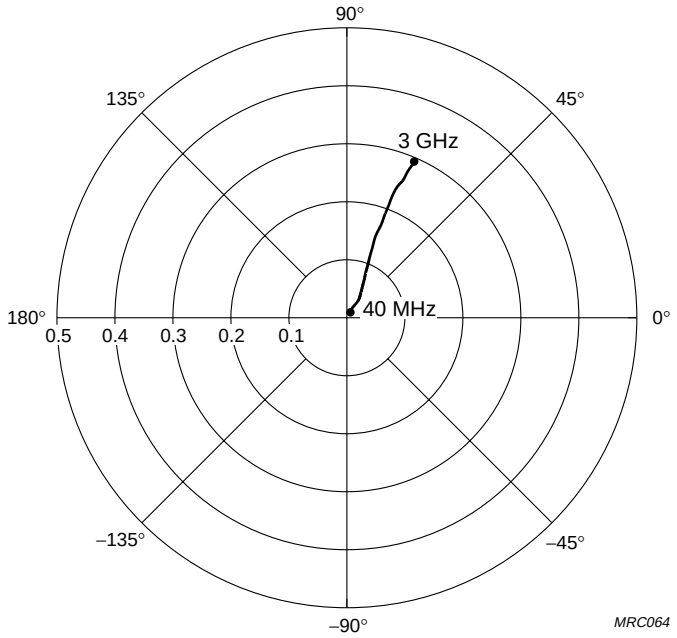

I_C = 40 mA; V_{CE} = 8 V.

Fig.16 Common emitter reverse transmission coefficient (S_{12}).

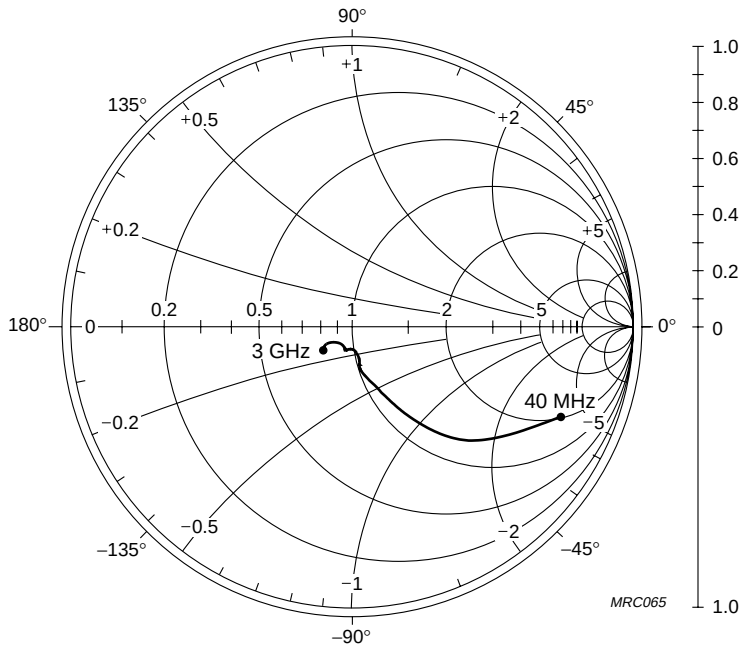

I_C = 40 mA; V_{CE} = 8 V;
Z_o = 50 Ω.

Fig.17 Common emitter output reflection coefficient (S_{22}).

PACKAGE OUTLINE

Plastic surface mounted package; 3 leads **SOT323**

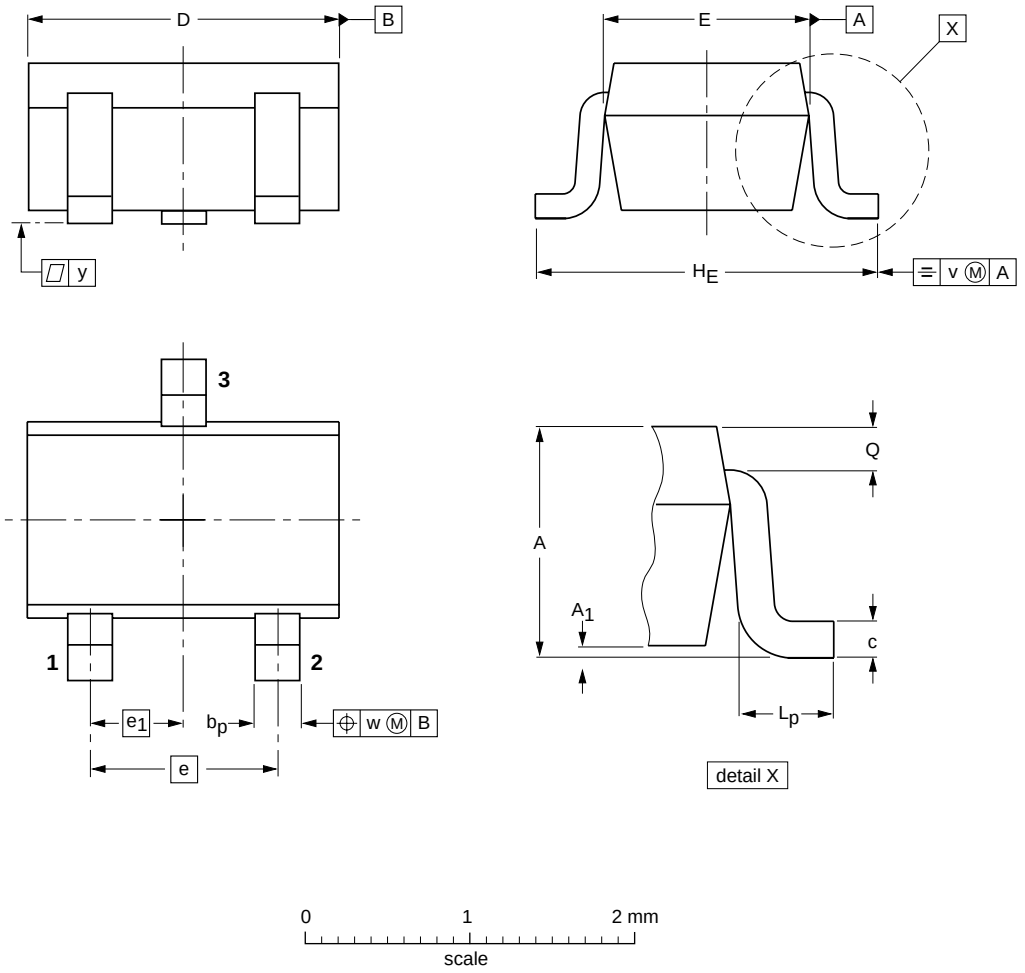

DIMENSIONS (mm are the original dimensions)

UNIT	A	A_1 max	b_p	c	D	E	e	e_1	H_E	L_p	Q	v	w
mm	1.1 0.8	0.1	0.4 0.3	0.25 0.10	2.2 1.8	1.35 1.15	1.3	0.65	2.2 2.0	0.45 0.15	0.23 0.13	0.2	0.2

OUTLINE VERSION	REFERENCES				EUROPEAN PROJECTION	ISSUE DATE
	IEC	JEDEC	EIAJ			
SOT323			SC-70			97-02-28

DEFINITIONS

Data Sheet Status	
Objective specification	This data sheet contains target or goal specifications for product development.
Preliminary specification	This data sheet contains preliminary data; supplementary data may be published later.
Product specification	This data sheet contains final product specifications.
Limiting values	
Limiting values given are in accordance with the Absolute Maximum Rating System (IEC 134). Stress above one or more of the limiting values may cause permanent damage to the device. These are stress ratings only and operation of the device at these or at any other conditions above those given in the Characteristics sections of the specification is not implied. Exposure to limiting values for extended periods may affect device reliability.	
Application information	
Where application information is given, it is advisory and does not form part of the specification.	

LIFE SUPPORT APPLICATIONS

These products are not designed for use in life support appliances, devices, or systems where malfunction of these products can reasonably be expected to result in personal injury. Philips customers using or selling these products for use in such applications do so at their own risk and agree to fully indemnify Philips for any damages resulting from such improper use or sale.