查询BGA2012供应商 捷多邦，专业PCB打样工厂，24小时加急出货

DISCRETE SEMICONDUCTORS

DATA SHEET

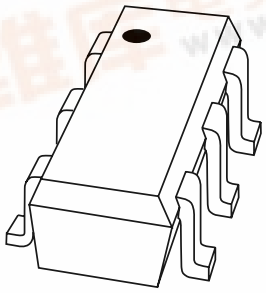

BGA2012
1900 MHz high linear low noise amplifier

Product specification
Supersedes data of 2000 Sep 06

2000 Dec 04

找PDF 维库一下 pdf.dzsc.com

Philips Semiconductors

PHILIPS

1900 MHz high linear low noise amplifier BGA2012

FEATURES

- Low current, low voltage
- High linearity
- High power gain
- Low noise
- Integrated temperature compensated biasing
- Control pin for adjustment bias current.

APPLICATIONS

- RF front end
- Low noise amplifiers, e.g. CDMA, PHs, Dect, etc.

DESCRIPTION

Silicon Monolitic Microwave Integrated Circuit (MMIC) amplifier consisting of an NPN double polysilicon transistor with integrated biasing for low voltage applications in a 6-pin SOT363 plastic SMD package.

PINNING

PIN	DESCRIPTION
1	RF in
2	V_C
3	V_S
4	RF out
5, 6	GND

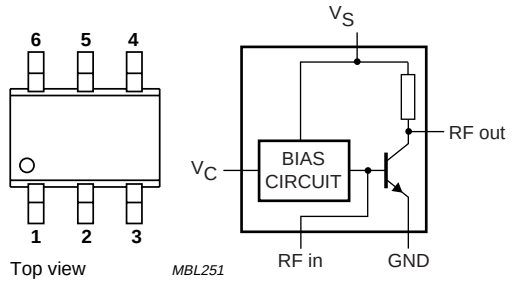

Marking code: A6-

Fig.1 Simplified outline (SOT363) and symbol.

QUICK REFERENCE DATA

SYMBOL	PARAMETER	CONDITIONS	TYP.	MAX.	UNIT
V_S	DC supply voltage	RF input AC coupled	3	4.5	V
I_S	DC supply current		7.5	–	mA
I_C	DC control current	$V_C = V_S$	0.11	–	mA
$\|s_{21}\|^2$	insertion power gain	in application circuit, see Fig.2; f = 1900 MHz	16	–	dB
NF	noise figure	I_S = 7 mA; f = 1900 MHz	1.7	–	dB

LIMITING VALUES

In accordance with the Absolute Maximum Rating System (IEC 60134)

SYMBOL	PARAMETER	CONDITIONS	MIN.	MAX.	UNIT
V_S	DC supply voltage	RF input AC coupled	–	4.5	V
V_C	voltage on control pin		–	V_S	V
I_S	supply current	forced by DC voltage on RF input	–	15	mA
I_C	control current		–	0.25	mA
P_{tot}	total power dissipation	$T_s \leq 100$ °C	–	70	mW
T_{stg}	storage temperature		–65	+150	°C
T_j	operating junction temperature		–	150	°C

THERMAL CHARACTERISTICS

SYMBOL	PARAMETER	CONDITIONS	VALUE	UNIT
$R_{th\ j\text{-}s}$	thermal resistance from junction to solder point	P_{tot} = 135 mW; $T_s \leq 100$ °C	350	K/W

CHARACTERISTICS

RF input AC coupled; V_S = 3 V; I_S = 7 mA; f = 1900 MHz; T_j = 25 °C; unless otherwise specified.

SYMBOL	PARAMETER	CONDITIONS	MIN.	TYP.	MAX.	UNIT
I_S	supply current		5	7.5	10	mA
I_C	control current		–	0.11	–	mA
$R_{L\ IN}$	return losses input	typical application; see Fig.2	–	–11	–	dB
		high IP3 (see Fig.2; stripline = 0 mm)	–	–20	–	dB
		high IP3 (see Fig.2; stripline = 0.5 mm)	–	–14	–	dB
$R_{L\ OUT}$	return losses output	typical application; see Fig.2	–	–9	–	dB
		high IP3 (see Fig.2; stripline = 0 mm)	–	–10	–	dB
		high IP3 (see Fig.2; stripline = 0.5 mm)	–	–8	–	dB
$\|s_{21}\|^2$	insertion power gain	typical application (see Fig.2)	–	14	–	dB
		high IP3 (see Fig.2; stripline = 0 mm)	–	16	–	dB
		high IP3 (see Fig.2; stripline = 0.5 mm)	–	14	–	dB
NF	noise figure	typical application; see Fig.2; I_S = 7 mA	–	1.7	–	dB
		high IP3 (see Fig.2; stripline = 0 mm)	–	2.2	–	dB
		high IP3 (see Fig.2; stripline = 0.5 mm)	–	2.3	–	dB
$IP3_{in}$	input intercept point	typical application; see Fig.2	–	–7	–	dBm
		high IP3 (see Fig.2; stripline = 0 mm)	–	7	–	dBm
		high IP3 (see Fig.2; stripline = 0.5 mm)	–	10	–	dBm

APPLICATION INFORMATION

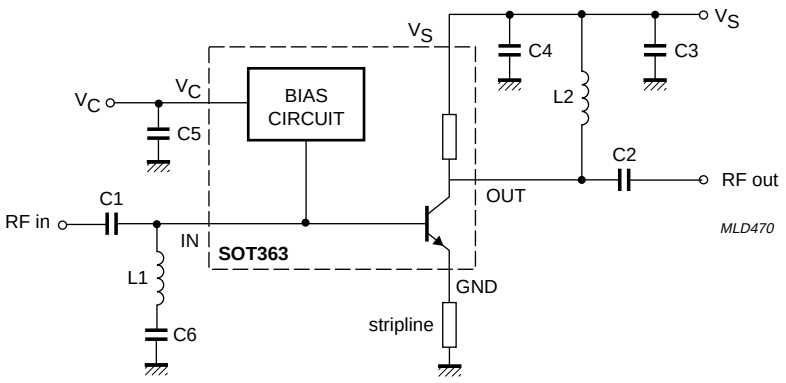

Fig.2 Application circuit.

List of components (see Fig.2**)**

COMPONENT	DESCRIPTION	TYPICAL APPLICATION	HIGH IP3 APPLICATION	DIMENSIONS
C1, C2	multilayer ceramic chip capacitor	100 pF	100 pF	0603
C3, C5	multilayer ceramic chip capacitor	22 nF	22 nF	0603
C4	multilayer ceramic chip capacitor	–	–	–
C6	multilayer ceramic chip capacitor	–	100 nF	0805
L1	SMD inductor	–	3.9 nH	0603
L2	SMD inductor	–	3.9 nH	0603

Note

1. The stripline (w = 0.7 mm) is on a gold plated double copper-clad printed-circuit board (ε_r = 6.15), board thickness = 0.64 mm, copper thickness = 35 μm, gold thickness = 5 μm.

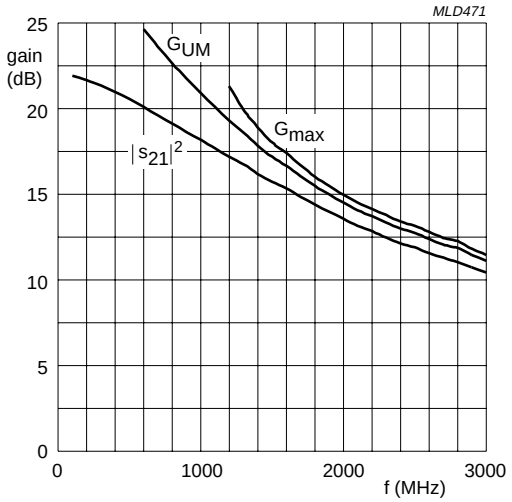

I_C = 7 mA; V_S = V_C = 3 V; P_D = –30 dBm; Z_o = 50 Ω.

Fig.3 Insertion gain ($|s_{21}|^2$), G_{UM} and G_{max} as functions of frequency; typical values.

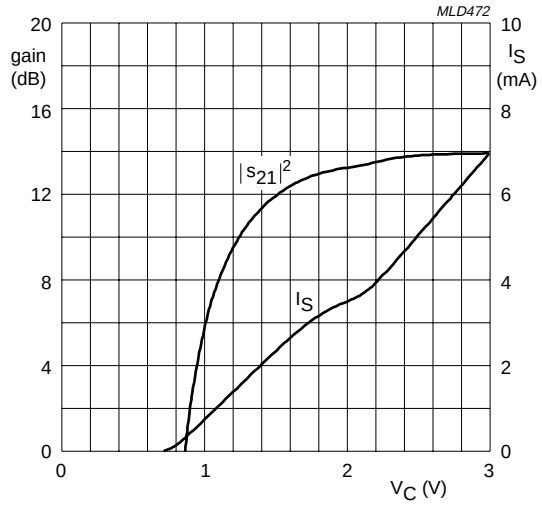

f = 1900 MHz; V_S = 3 V; P_D = –30 dBm.

Fig.4 Insertion gain and supply current as functions of control voltage; typical values.

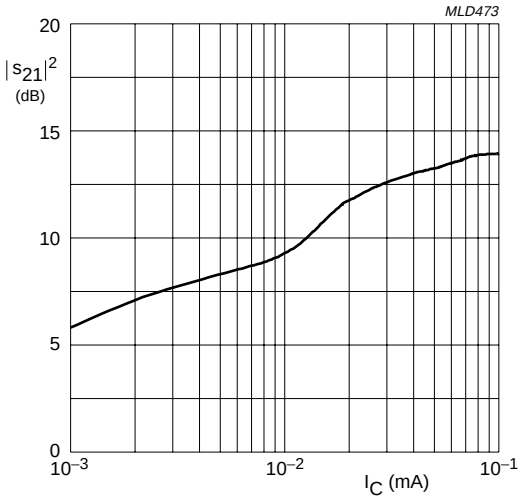

f = 1900 MHz; V_S = 3 V; P_D = –30 dBm.

Fig.5 Insertion gain as a function of control current; typical values.

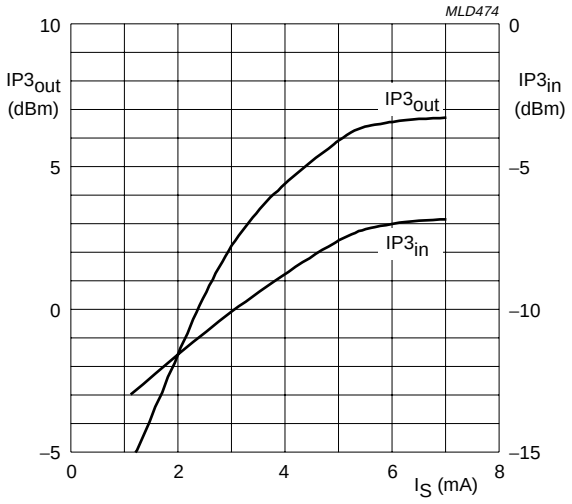

V_S = V_C = 3 V; P_D = –30 dBm (both tones); f = 1900 MHz; Δf = 100 kHz.

Fig.6 Output and input 3rd order intercept point as functions of supply current; typical application; typical values.

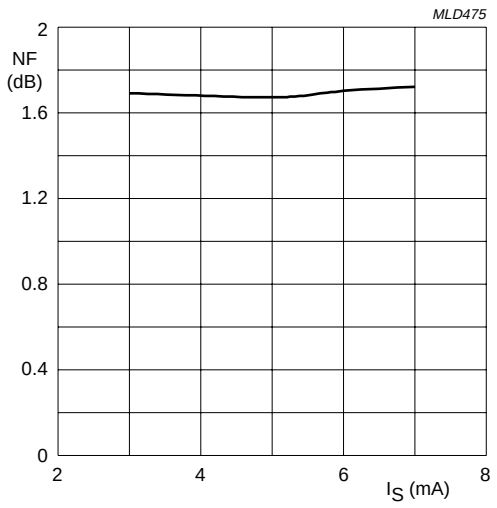

$V_S = V_C = 3$ V; f = 1900 MHz.

Fig.7 Noise figure as a function of supply current; typical values.

Scattering parameters

$V_S = V_C = 3$ V; $P_D = -30$ dBm; $Z_o = 50\ \Omega$; $T_{amb} = 25$ °C

f (MHz)	s_{11}		s_{21}		s_{12}		s_{22}	
	MAGNITUDE (ratio)	ANGLE (deg)	MAGNITUDE (ratio)	ANGLE (deg)	MAGNITUDE (ratio)	ANGLE (deg)	MAGNITUDE (ratio)	ANGLE (deg)
100	0.775	–8.390	12.527	171.1	0.005	84.90	0.742	–6.684
200	0.761	–16.37	12.154	163.1	0.011	79.39	0.731	–13.15
400	0.709	–31.51	11.213	148.6	0.020	72.23	0.689	–24.85
600	0.646	–44.97	10.139	136.4	0.028	66.03	0.631	–34.90
800	0.581	–56.47	9.061	126.1	0.034	61.82	0.573	–43.40
1000	0.519	–66.59	8.131	117.3	0.039	58.86	0.519	–50.54
1200	0.461	–75.41	7.254	109.5	0.043	58.07	0.469	–57.19
1400	0.401	–83.99	6.461	103.1	0.047	57.92	0.428	–64.08
1600	0.350	–93.12	5.869	96.39	0.051	57.26	0.396	–70.03
1800	0.313	–102.0	5.256	90.46	0.054	57.37	0.369	–75.33
2000	0.289	–110.6	4.778	85.58	0.058	58.10	0.348	–80.47
2200	0.278	–118.5	4.394	81.16	0.062	57.66	0.336	–85.37
2400	0.276	–125.0	4.051	77.28	0.066	56.08	0.333	–89.83
2600	0.286	–131.9	3.793	74.34	0.072	60.98	0.316	–92.61
2800	0.293	–136.5	3.571	70.27	0.076	60.21	0.308	–94.44
3000	0.287	–141.6	3.326	67.39	0.083	61.36	0.272	–99.52

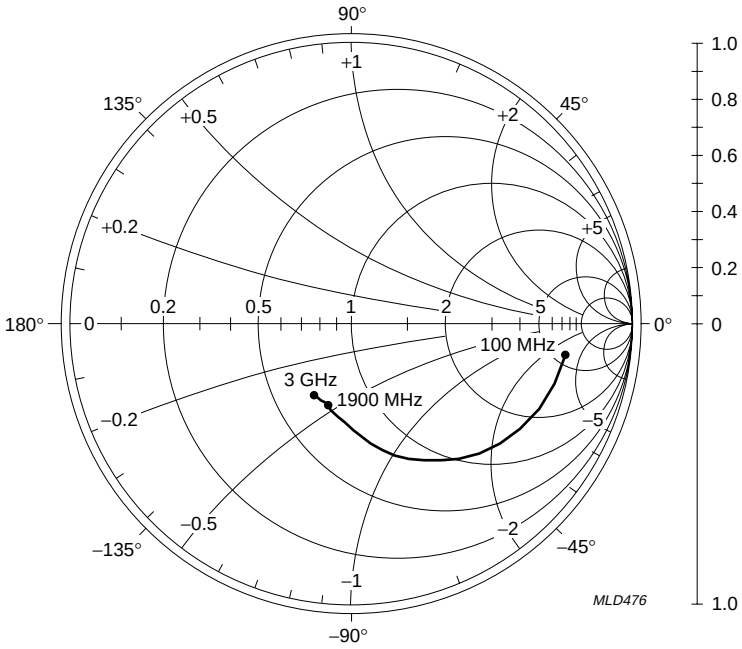

I_C = 7 mA; V_S = V_C = 3 V; P_D = –30 dBm; Z_o = 50 Ω.

Fig.8 Common emitter input reflection coefficient (s_{11}); typical values.

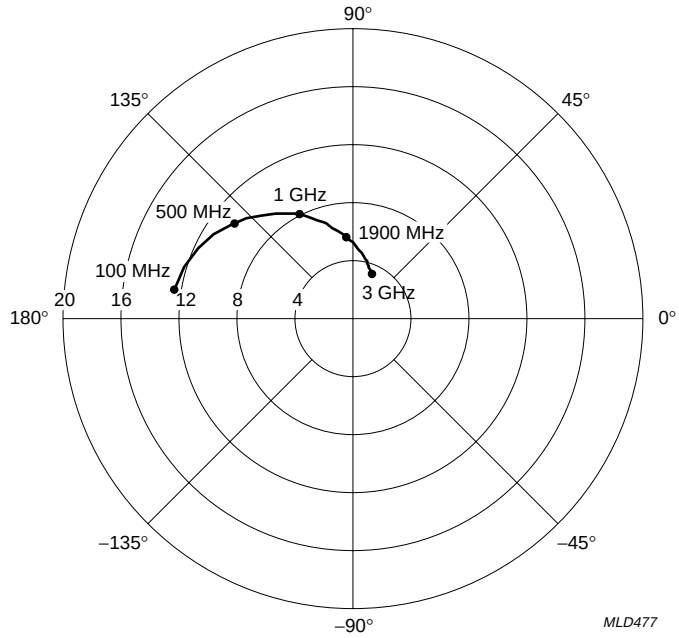

I_C = 7 mA; V_S = V_C = 3 V; P_D = –30 dBm; Z_o = 50 Ω.

Fig.9 Common emitter forward transmission coefficient (s_{21}); typical values.

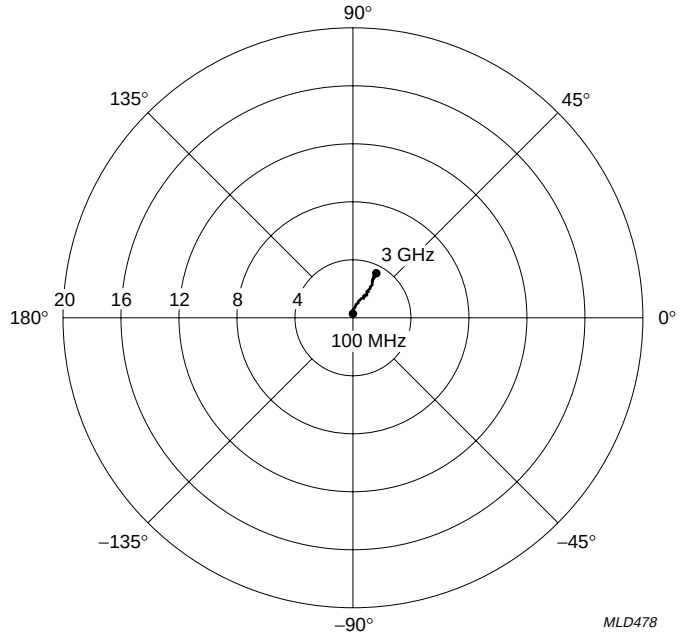

I_C = 7 mA; V_S = V_C = 3 V; P_D = –30 dBm; Z_o = 50 Ω.

Fig.10 Common emitter reverse transmission coefficient (s_{12}); typical values.

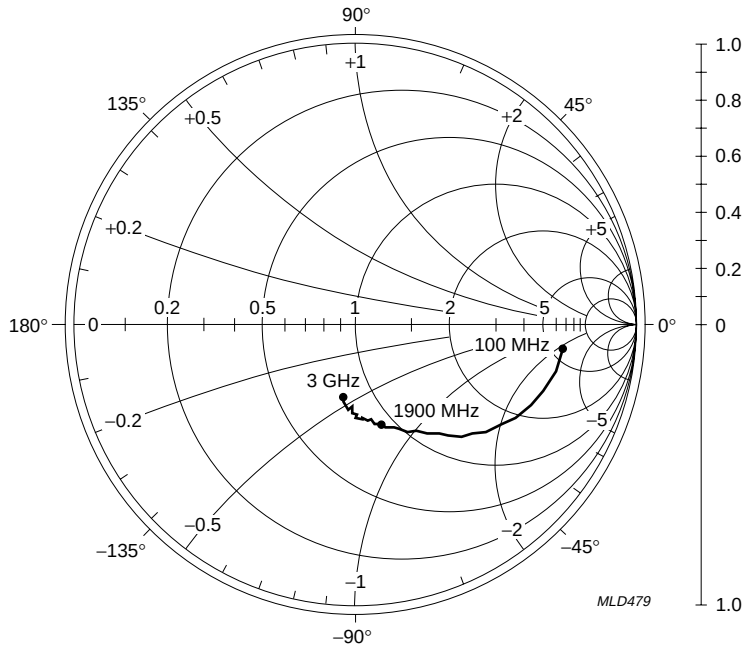

I_C = 7 mA; V_S = V_C = 3 V; P_D = –30 dBm; Z_o = 50 Ω.

Fig.11 Common emitter output reflection coefficient (s_{22}); typical values.

PACKAGE OUTLINE

Plastic surface mounted package; 6 leads **SOT363**

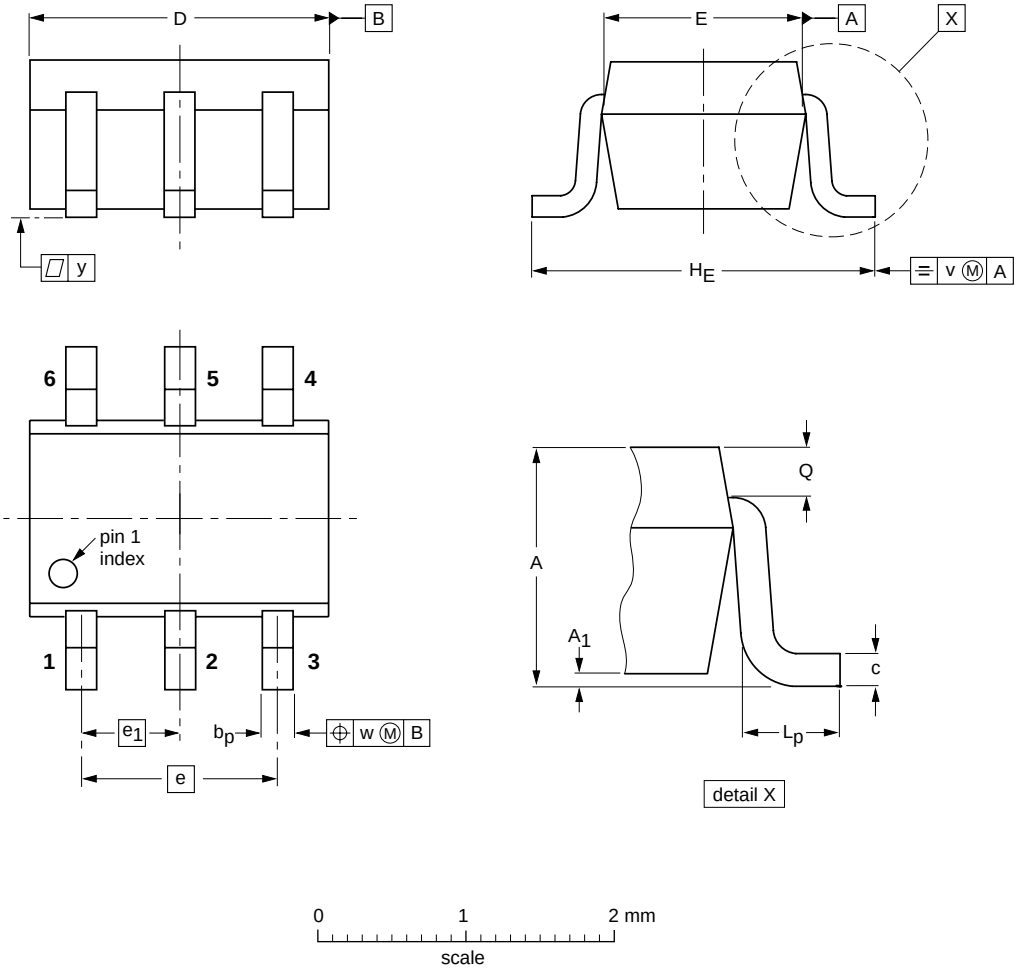

DIMENSIONS (mm are the original dimensions)

UNIT	A	A_1 max	b_p	c	D	E	e	e_1	H_E	L_p	Q	v	w	y
mm	1.1 0.8	0.1	0.30 0.20	0.25 0.10	2.2 1.8	1.35 1.15	1.3	0.65	2.2 2.0	0.45 0.15	0.25 0.15	0.2	0.2	0.1

OUTLINE VERSION	REFERENCES				EUROPEAN PROJECTION	ISSUE DATE
	IEC	JEDEC	EIAJ			
SOT363			SC-88			97-02-28

DATA SHEET STATUS

DATA SHEET STATUS	PRODUCT STATUS	DEFINITIONS [1]
Objective specification	Development	This data sheet contains the design target or goal specifications for product development. Specification may change in any manner without notice.
Preliminary specification	Qualification	This data sheet contains preliminary data, and supplementary data will be published at a later date. Philips Semiconductors reserves the right to make changes at any time without notice in order to improve design and supply the best possible product.
Product specification	Production	This data sheet contains final specifications. Philips Semiconductors reserves the right to make changes at any time without notice in order to improve design and supply the best possible product.

Note

1. Please consult the most recently issued data sheet before initiating or completing a design.

DEFINITIONS

Short-form specification — The data in a short-form specification is extracted from a full data sheet with the same type number and title. For detailed information see the relevant data sheet or data handbook.

Limiting values definition — Limiting values given are in accordance with the Absolute Maximum Rating System (IEC 60134). Stress above one or more of the limiting values may cause permanent damage to the device. These are stress ratings only and operation of the device at these or at any other conditions above those given in the Characteristics sections of the specification is not implied. Exposure to limiting values for extended periods may affect device reliability.

Application information — Applications that are described herein for any of these products are for illustrative purposes only. Philips Semiconductors make no representation or warranty that such applications will be suitable for the specified use without further testing or modification.

DISCLAIMERS

Life support applications — These products are not designed for use in life support appliances, devices, or systems where malfunction of these products can reasonably be expected to result in personal injury. Philips Semiconductors customers using or selling these products for use in such applications do so at their own risk and agree to fully indemnify Philips Semiconductors for any damages resulting from such application.

Right to make changes — Philips Semiconductors reserves the right to make changes, without notice, in the products, including circuits, standard cells, and/or software, described or contained herein in order to improve design and/or performance. Philips Semiconductors assumes no responsibility or liability for the use of any of these products, conveys no licence or title under any patent, copyright, or mask work right to these products, and makes no representations or warranties that these products are free from patent, copyright, or mask work right infringement, unless otherwise specified.

NOTES

Philips Semiconductors – a worldwide company

Argentina: see South America

Australia: 3 Figtree Drive, HOMEBUSH, NSW 2140,
Tel. +61 2 9704 8141, Fax. +61 2 9704 8139

Austria: Computerstr. 6, A-1101 WIEN, P.O. Box 213,
Tel. +43 1 60 101 1248, Fax. +43 1 60 101 1210

Belarus: Hotel Minsk Business Center, Bld. 3, r. 1211, Volodarski Str. 6,
220050 MINSK, Tel. +375 172 20 0733, Fax. +375 172 20 0773

Belgium: see The Netherlands

Brazil: see South America

Bulgaria: Philips Bulgaria Ltd., Energoproject, 15th floor,
51 James Bourchier Blvd., 1407 SOFIA,
Tel. +359 2 68 9211, Fax. +359 2 68 9102

Canada: PHILIPS SEMICONDUCTORS/COMPONENTS,
Tel. +1 800 234 7381, Fax. +1 800 943 0087

China/Hong Kong: 501 Hong Kong Industrial Technology Centre,
72 Tat Chee Avenue, Kowloon Tong, HONG KONG,
Tel. +852 2319 7888, Fax. +852 2319 7700

Colombia: see South America

Czech Republic: see Austria

Denmark: Sydhavnsgade 23, 1780 COPENHAGEN V,
Tel. +45 33 29 3333, Fax. +45 33 29 3905

Finland: Sinikalliontie 3, FIN-02630 ESPOO,
Tel. +358 9 615 800, Fax. +358 9 6158 0920

France: 51 Rue Carnot, BP317, 92156 SURESNES Cedex,
Tel. +33 1 4099 6161, Fax. +33 1 4099 6427

Germany: Hammerbrookstraße 69, D-20097 HAMBURG,
Tel. +49 40 2353 60, Fax. +49 40 2353 6300

Hungary: see Austria

India: Philips INDIA Ltd, Band Box Building, 2nd floor,
254-D, Dr. Annie Besant Road, Worli, MUMBAI 400 025,
Tel. +91 22 493 8541, Fax. +91 22 493 0966

Indonesia: PT Philips Development Corporation, Semiconductors Division,
Gedung Philips, Jl. Buncit Raya Kav.99-100, JAKARTA 12510,
Tel. +62 21 794 0040 ext. 2501, Fax. +62 21 794 0080

Ireland: Newstead, Clonskeagh, DUBLIN 14,
Tel. +353 1 7640 000, Fax. +353 1 7640 200

Israel: RAPAC Electronics, 7 Kehilat Saloniki St, PO Box 18053,
TEL AVIV 61180, Tel. +972 3 645 0444, Fax. +972 3 649 1007

Italy: PHILIPS SEMICONDUCTORS, Via Casati, 23 - 20052 MONZA (MI),
Tel. +39 039 203 6838, Fax +39 039 203 6800

Japan: Philips Bldg 13-37, Kohnan 2-chome, Minato-ku,
TOKYO 108-8507, Tel. +81 3 3740 5130, Fax. +81 3 3740 5057

Korea: Philips House, 260-199 Itaewon-dong, Yongsan-ku, SEOUL,
Tel. +82 2 709 1412, Fax. +82 2 709 1415

Malaysia: No. 76 Jalan Universiti, 46200 PETALING JAYA, SELANGOR,
Tel. +60 3 750 5214, Fax. +60 3 757 4880

Mexico: 5900 Gateway East, Suite 200, EL PASO, TEXAS 79905,
Tel. +9-5 800 234 7381, Fax +9-5 800 943 0087

Middle East: see Italy

Netherlands: Postbus 90050, 5600 PB EINDHOVEN, Bldg. VB,
Tel. +31 40 27 82785, Fax. +31 40 27 88399

New Zealand: 2 Wagener Place, C.P.O. Box 1041, AUCKLAND,
Tel. +64 9 849 4160, Fax. +64 9 849 7811

Norway: Box 1, Manglerud 0612, OSLO,
Tel. +47 22 74 8000, Fax. +47 22 74 8341

Pakistan: see Singapore

Philippines: Philips Semiconductors Philippines Inc.,
106 Valero St. Salcedo Village, P.O. Box 2108 MCC, MAKATI,
Metro MANILA, Tel. +63 2 816 6380, Fax. +63 2 817 3474

Poland: Al.Jerozolimskie 195 B, 02-222 WARSAW,
Tel. +48 22 5710 000, Fax. +48 22 5710 001

Portugal: see Spain

Romania: see Italy

Russia: Philips Russia, Ul. Usatcheva 35A, 119048 MOSCOW,
Tel. +7 095 755 6918, Fax. +7 095 755 6919

Singapore: Lorong 1, Toa Payoh, SINGAPORE 319762,
Tel. +65 350 2538, Fax. +65 251 6500

Slovakia: see Austria

Slovenia: see Italy

South Africa: S.A. PHILIPS Pty Ltd., 195-215 Main Road Martindale,
2092 JOHANNESBURG, P.O. Box 58088 Newville 2114,
Tel. +27 11 471 5401, Fax. +27 11 471 5398

South America: Al. Vicente Pinzon, 173, 6th floor,
04547-130 SÃO PAULO, SP, Brazil,
Tel. +55 11 821 2333, Fax. +55 11 821 2382

Spain: Balmes 22, 08007 BARCELONA,
Tel. +34 93 301 6312, Fax. +34 93 301 4107

Sweden: Kottbygatan 7, Akalla, S-16485 STOCKHOLM,
Tel. +46 8 5985 2000, Fax. +46 8 5985 2745

Switzerland: Allmendstrasse 140, CH-8027 ZÜRICH,
Tel. +41 1 488 2741 Fax. +41 1 488 3263

Taiwan: Philips Semiconductors, 5F, No. 96, Chien Kuo N. Rd., Sec. 1,
TAIPEI, Taiwan Tel. +886 2 2134 2451, Fax. +886 2 2134 2874

Thailand: PHILIPS ELECTRONICS (THAILAND) Ltd.,
60/14 MOO 11, Bangna Trad Road KM. 3, Bagna, BANGKOK 10260,
Tel. +66 2 361 7910, Fax. +66 2 398 3447

Turkey: Yukari Dudullu, Org. San. Blg., 2.Cad. Nr. 28 81260 Umraniye,
ISTANBUL, Tel. +90 216 522 1500, Fax. +90 216 522 1813

Ukraine: PHILIPS UKRAINE, 4 Patrice Lumumba str., Building B, Floor 7,
252042 KIEV, Tel. +380 44 264 2776, Fax. +380 44 268 0461

United Kingdom: Philips Semiconductors Ltd., 276 Bath Road, Hayes,
MIDDLESEX UB3 5BX, Tel. +44 208 730 5000, Fax. +44 208 754 8421

United States: 811 East Arques Avenue, SUNNYVALE, CA 94088-3409,
Tel. +1 800 234 7381, Fax. +1 800 943 0087

Uruguay: see South America

Vietnam: see Singapore

Yugoslavia: PHILIPS, Trg N. Pasica 5/v, 11000 BEOGRAD,
Tel. +381 11 3341 299, Fax.+381 11 3342 553

For all other countries apply to: Philips Semiconductors,
Marketing Communications, Building BE-p, P.O. Box 218, 5600 MD EINDHOVEN,
The Netherlands, Fax. +31 40 27 24825

Internet: http://www.semiconductors.philips.com

© Philips Electronics N.V. 2000

SCA 70

All rights are reserved. Reproduction in whole or in part is prohibited without the prior written consent of the copyright owner.

The information presented in this document does not form part of any quotation or contract, is believed to be accurate and reliable and may be changed without notice. No liability will be accepted by the publisher for any consequence of its use. Publication thereof does not convey nor imply any license under patent- or other industrial or intellectual property rights.

Printed in The Netherlands 613516/02/pp12 Date of release: 2000 Dec 04 Document order number: 9397 750 07679

Let's make things better.

Philips Semiconductors

PHILIPS