查询BH6573FV供应商 捷多邦，专业PCB打样工厂，24小时加急出货

PWM driver for CD

BH6573FV

BH6573FV is a 4-channel PWM driver developed for driving stepping motor, and DC motor of DSC, and also developed for driving DC motor, and actuator of CD / MD.
This IC has achieved lower power consumption of the set by using power MOSFET in output.

●Applications

CD, MD, DSC, DVC

●Features

1) Four channels of power MOS-H bridges are contained.
2) Available for PWM input.
3) Applicable for stepping-motor drive.
4) Separating VM into CH1, CH2 and CH3 / 4.
5) Low on-resistance 1.3Ω (typ.)
6) Low power consumption.
7) SSOP-B24 package.

●Absolute maximum ratings (Ta=25°C)

Parameter	Symbol	Limits	Unit
H-bridge power supply voltage	V_M	6	V
Control circuit power supply voltage	V_{DD}	6	V
Driver output current	I_O	1000 *1	mA
Power dissipation	Pd	1025 *2	mW
Operating temperature range	Topr	–40~+85	°C
Storage temperature range	Tstg	–55~+150	°C

*1 The current is guaranteed 1.0A is case of the current is turned on/off in a duty-ratio of less than 1/10 with a maximum on-time of 5msec.
*2 When a 70mm×70mm, 1.6mm thick glass epoxy substrate having a copper foil content of less than 3% is mounted. When the circuit if used at Ta of 25°C or more, subtract 8.2mW per degree from the rating.

●Recommended operating conditions

Parameter	Symbol	Min.	Typ.	Max.	Unit
H-bridge power supply voltage	V_M	1.6	5.0	5.5	V
Control circuit power supply voltage	V_{DD}	2.0	3.0	5.5	V

找PDF 维库一下 pdf.dzsc.com

●Block diagram

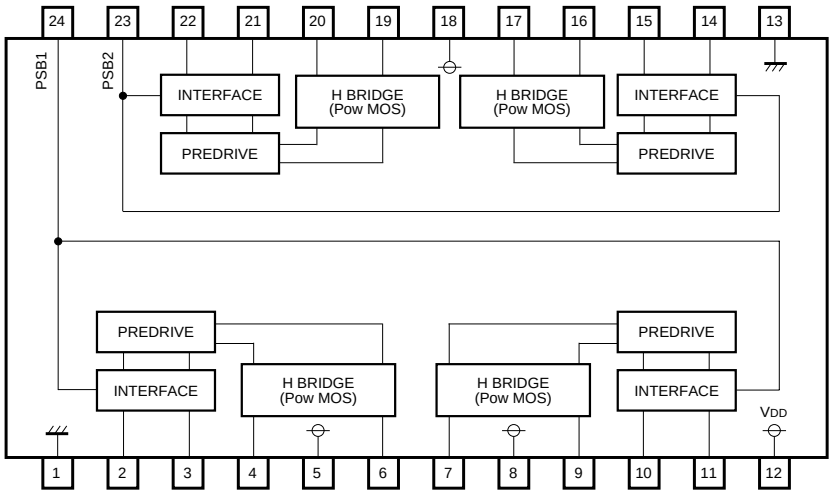

●Pin descriptions

Pin No.	Pin name	Functions
1	GND	GND
2	IN1R	CH1 Reverse input
3	IN1F	CH1 Forward input
4	OUT1F	CH1 Forward output
5	VM1	Power supply for CH1 power block
6	OUT1R	CH1 Reverse output
7	OUT2R	CH2 Reverse output
8	VM2	Power supply for CH2 power block
9	OUT2F	CH2 Forward output
10	IN2F	CH2 Forward input
11	IN2R	CH2 Reverse input
12	VDD	Power supply for pre block

Pin No.	Pin name	Functions
13	GND	GND
14	IN4R	CH4 Reverse input
15	IN4F	CH4 Forward input
16	OUT4F	CH4 Forward output
17	OUT4R	CH4 Reverse output
18	VM3	Power supply for CH3, 4 power block
19	OUT3R	CH3 Reverse output
20	OUT3F	CH3 Forward output
21	IN3F	CH3 Forward input
22	IN3R	CH3 Reverse input
23	PSB2	CH3, 4 power save control pin
24	PSB1	CH1, 2 power save control pin

●**Input output circuits**

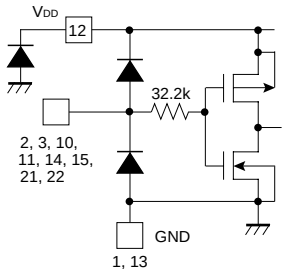

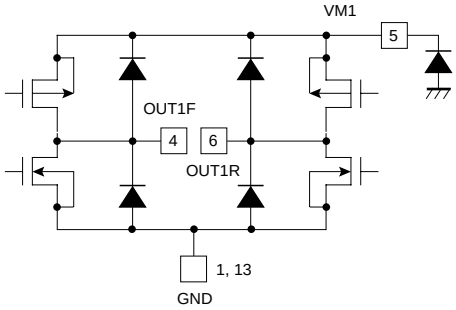

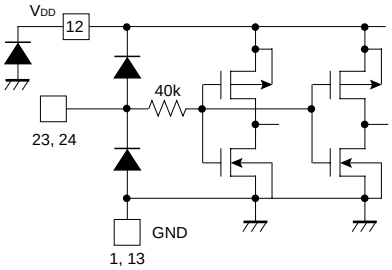

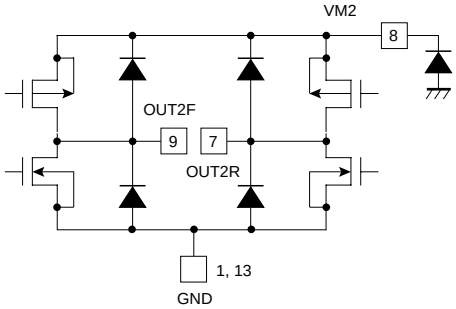

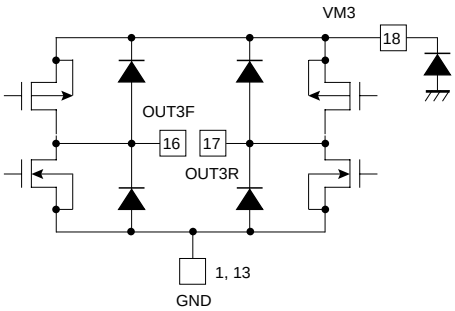

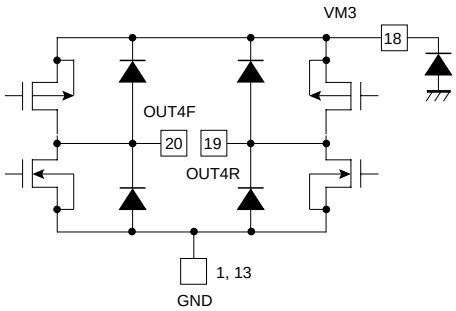

●**Electrical characteristics** (unless otherwise noted, Ta=25°C, V_M=5V, V_{DD}=3V, f_{IN}=176kHz, RL=8Ω-47uH)

Parameter	Symbol	Min.	Typ.	Max.	Unit	Conditions	Measuring circuit
<H-bridge power supply voltage>							
Upon no signal	IMST	–	200	350	μA		Fig.1
<Control circuit power supply voltage>							
Upon no signal	$I_{DD}1$	–	0	1	μA		Fig.1
Upon operation	$I_{DD}2$	–	6	70	μA	Drivimg 4channels	Fig.1
<Logic input character>							
"H" level input voltage	V_{IH}	V_{DD} –0.4	–	–	V		Fig.1
"L" level input voltage	V_{IL}	–	–	0.3	V		Fig.1
"H" level input current	I_{IH}	–	–	1	μA		Fig.1
"L" level input current	I_{IL}	–1	–	–	μA		Fig.1
Output in-resistance 1	R_{ON}	–	1.3	2.0	Ω		Fig.1
Output in-resistance 2	R_{ON}	–	1.8	2.6	Ω	Sum of on-resistance of top and that of bottom (V_M=5V, V_{DD}=3V)	Fig.1
Propagation delay time	tRISE	–	0.2	1	usec	Sum of on-resistance of top and that of bottom (V_M=2.5V, V_{DD}=3V)	Fig.1
	tFALL	–	0.2	1	usec		Fig.1
Minimum input pulse width	t_{MIN}	220	–	–	nsec	Output pulse more than 1/2tMIN	Fig.1

◎ This product is not designed for protection against radioactive rays.

●Measuring circuit

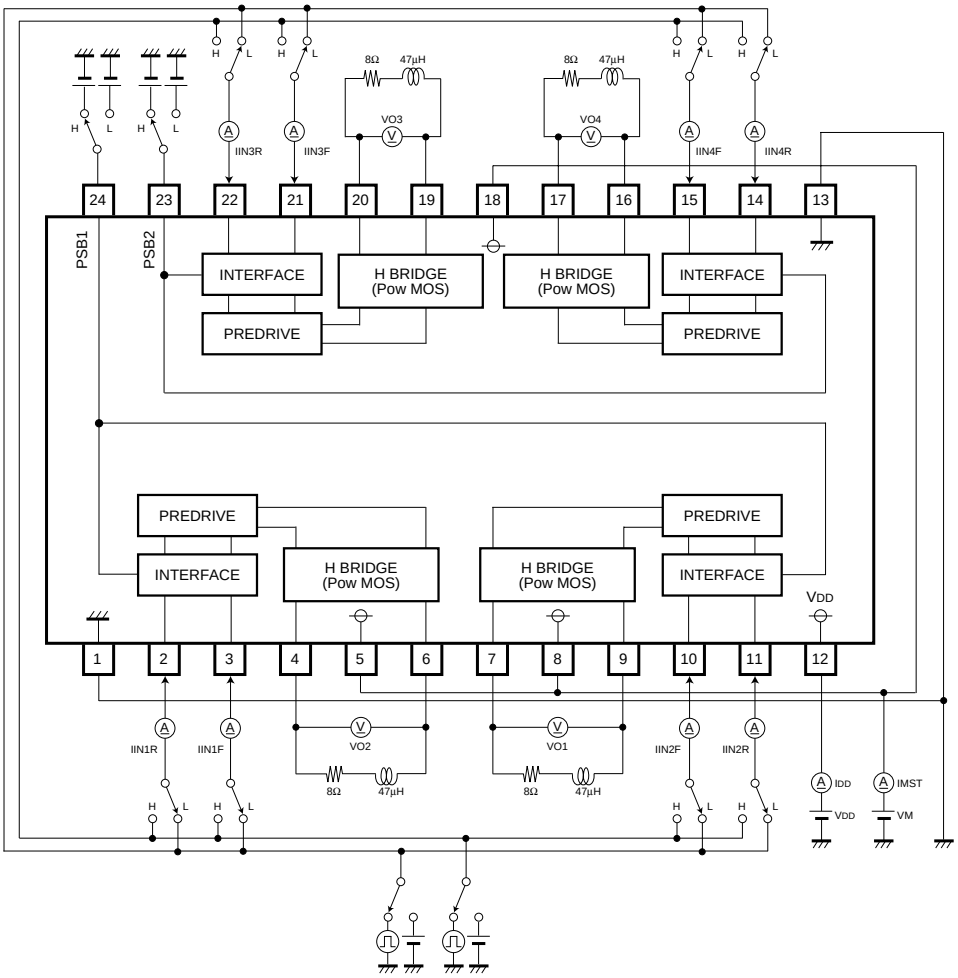

Fig.1

●Circuit operation

◎ Truth table

PSB1∗	PSB2∗	IN1~4F	IN1~4R	OUT1~4F	OUT1~4R
H	H	L	L	Hi-Z	Hi-Z
H	H	L	H	L	H
H	H	H	L	H	L
H	H	H	H	L	L
L	L	X	X	Hi-Z	Hi-Z

∗ PSB mode

PSB1	PSB2	OUT1, 2	OUT3, 4
H	H	Output is followed by truth table	Output is followed by truth table
H	L	Output is followed by truth table	Hi-Z
L	H	Hi-Z	Output is followed by truth table
L	L	Hi-Z	Hi-Z

●**Application example**

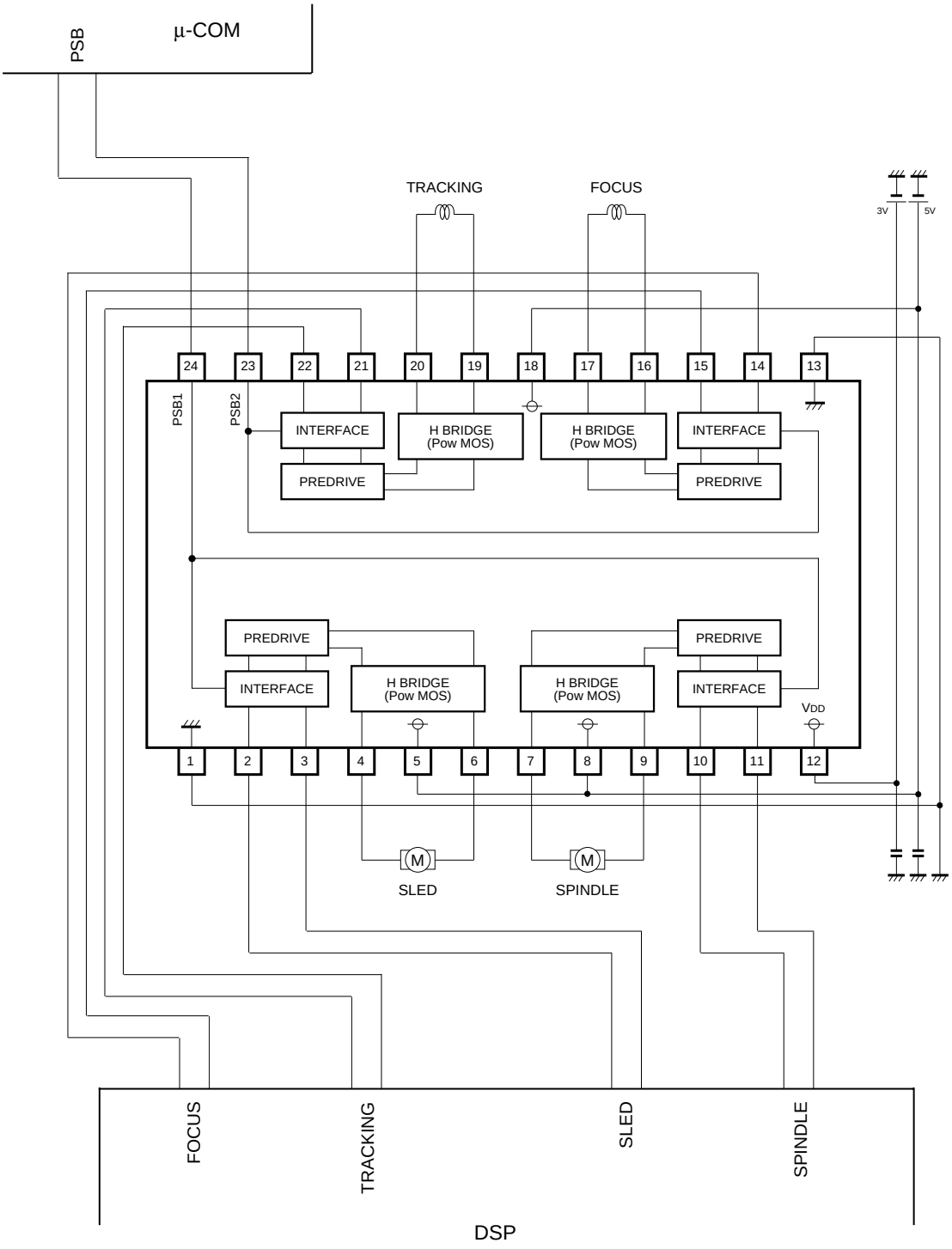

Fig.2

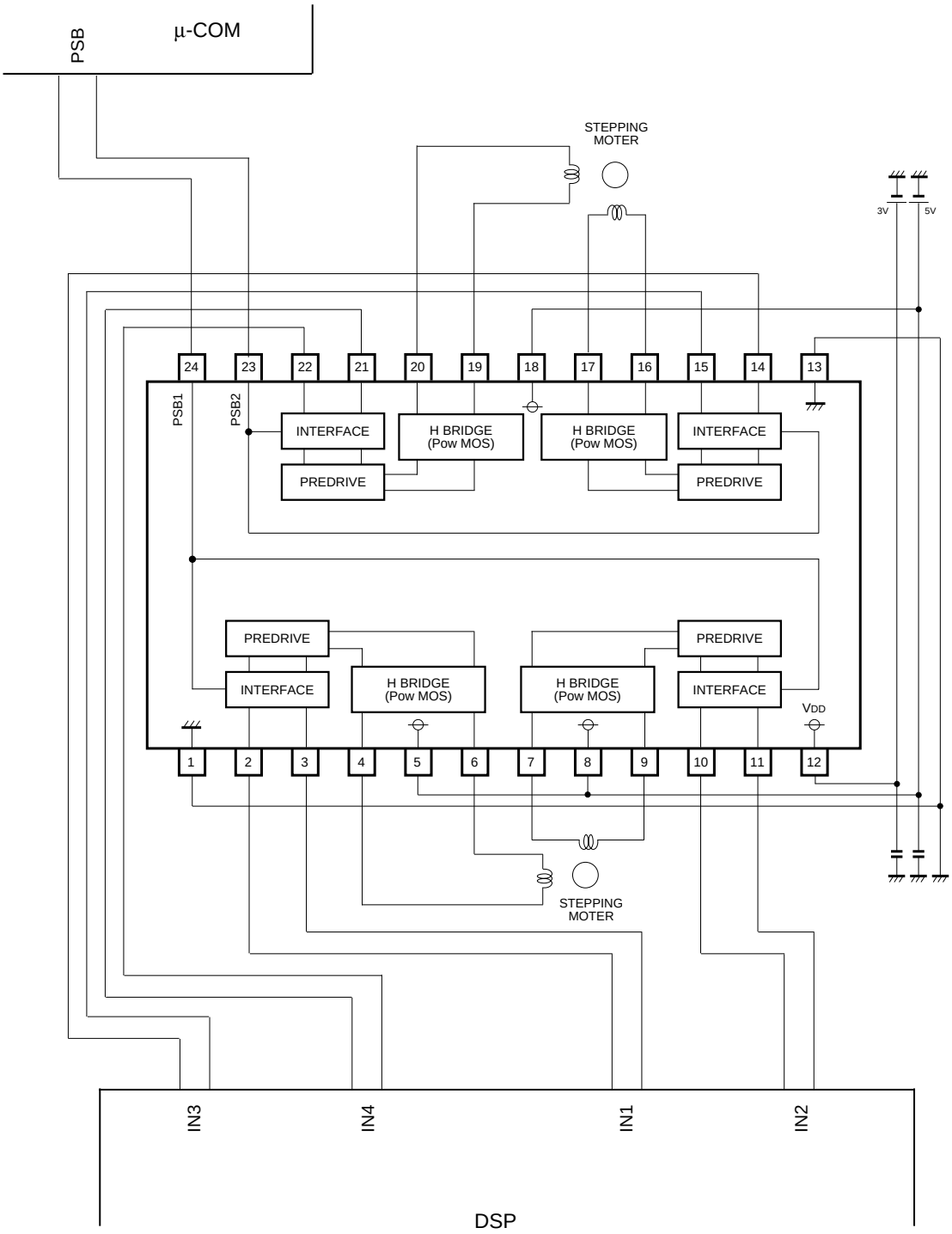
PSB
µ-COM
STEPPING MOTER
3V
5V
24
23
22
21
20
19
18
17
16
15
14
13
PSB1
PSB2
INTERFACE
H BRIDGE (Pow MOS)
H BRIDGE (Pow MOS)
INTERFACE
PREDRIVE
PREDRIVE
PREDRIVE
PREDRIVE
INTERFACE
H BRIDGE (Pow MOS)
H BRIDGE (Pow MOS)
INTERFACE
VDD
1
2
3
4
5
6
7
8
9
10
11
12
STEPPING MOTER
IN3
IN4
IN1
IN2
DSP

Fig.3

●Operation notes

1. Connect a bypass capacitor (0.1μF) across the supply voltage lines close to the IC pins.
2. Avoid short circuit between each driver output (4, 6, 7, 9, 16, 17, 19, 20pin) and power supply (5, 8, 12, 18pin), or GND (1, 13pin). And avoid short circuit between output terminals (4-6, 7-9, 16-17, 19-20).

●External dimensions (Units : mm)

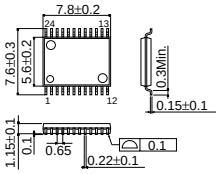

SSOP-B24

Notes

- No technical content pages of this document may be reproduced in any form or transmitted by any means without prior permission of ROHM CO.,LTD.
- The contents described herein are subject to change without notice. The specifications for the product described in this document are for reference only. Upon actual use, therefore, please request that specifications to be separately delivered.
- Application circuit diagrams and circuit constants contained herein are shown as examples of standard use and operation. Please pay careful attention to the peripheral conditions when designing circuits and deciding upon circuit constants in the set.
- Any data, including, but not limited to application circuit diagrams information, described herein are intended only as illustrations of such devices and not as the specifications for such devices. ROHM CO.,LTD. disclaims any warranty that any use of such devices shall be free from infringement of any third party's intellectual property rights or other proprietary rights, and further, assumes no liability of whatsoever nature in the event of any such infringement, or arising from or connected with or related to the use of such devices.
- Upon the sale of any such devices, other than for buyer's right to use such devices itself, resell or otherwise dispose of the same, no express or implied right or license to practice or commercially exploit any intellectual property rights or other proprietary rights owned or controlled by
- ROHM CO., LTD. is granted to any such buyer.
- Products listed in this document use silicon as a basic material.
  Products listed in this document are no antiradiation design.

The products listed in this document are designed to be used with ordinary electronic equipment or devices (such as audio visual equipment, office-automation equipment, communications devices, electrical appliances and electronic toys).
Should you intend to use these products with equipment or devices which require an extremely high level of reliability and the malfunction of with would directly endanger human life (such as medical instruments, transportation equipment, aerospace machinery, nuclear-reactor controllers, fuel controllers and other safety devices), please be sure to consult with our sales representative in advance.

About Export Control Order in Japan

Products described herein are the objects of controlled goods in Annex 1 (Item 16) of Export Trade Control Order in Japan.
In case of export from Japan, please confirm if it applies to "objective" criteria or an "informed" (by MITI clause) on the basis of "catch all controls for Non-Proliferation of Weapons of Mass Destruction.