查询TSMBJ0306C供应商 捷多邦，专业PCB打样工厂，24小时加急出货

Micro Commercial Corp.
21201 Itasca St.
Chatsworth, CA 91311
Phone: (818) 701-4933
Fax: (818) 701-4939

TSMBJ0306C THRU TSMBJ0324C

Transient Voltage Protection Device 75 to 320 Volts

Features

- Oxide-Glass passivated Junction
- Bi-Directional protection in a single device
- Surge capabilities up to 50A@10/1000us or 150A@8/20us
- High Off-State impedance and Low On-State voltage
- Plastic material has UL flammability classification 94V-0

Mechanical Data

- Case : Molded plastic
- Polarity : None cathode band denotes
- Approx Weight : 0.093grams

Maximum Rating

Characteristic	Symbol	Value	Unit
Non-repetitive peak impulse current	I_{PP}	50A	10/1000us
Non-repetitive peak On-state current	I_{TSM}	20A	8.3ms, one-half cycle
Operating temperature range	T_{OP}	-40~125°C	
Junction and storage temperature range	T_J, T_{STG}	-55~150°C	

Thermal Resistance

Characteristic	Symbol	Value	Unit
Thermal Resistance junction to lead	$R_{\theta JL}$	30°C/W	
Thermal Resistance junction to ambient	$R_{\theta JA}$	120°C/W	On recommended pad layout
Typical positive temperature coefficient for breakdown voltage	$\triangle V_{BR}/\triangle T_J$	0.1%/°C	

DO-214AA (SMBJ)

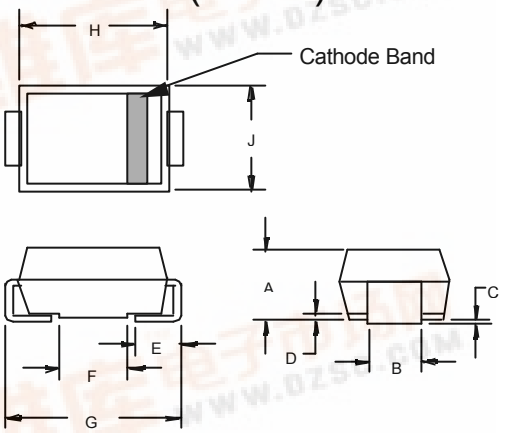

DIMENSIONS					
	INCHES		MM		
DIM	MIN	MAX	MIN	MAX	NOTE
A	.078	.096	2.00	2.44	
B	.077	.083	1.96	2.10	
C	.002	.008	.05	.20	
D	---	.02	---	.51	
E	.030	.060	.76	1.52	
F	.065	.091	1.65	2.32	
G	.205	.220	5.21	5.59	
H	.160	.180	4.06	4.57	
J	.130	.155	3.30	3.94	

SUGGESTED SOLDER PAD LAYOUT

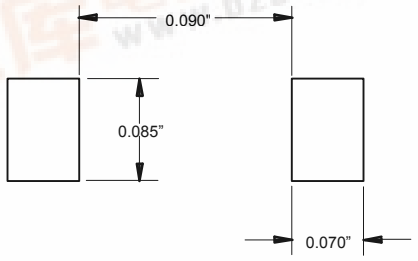

找PDF 维库一下 pdf.dzsc.com

TSMBJ0306C thru TSMBJ0324C

·M·C·C·

ELECTRICAL CHARACTERISTIC @25℃ Unless otherwise specified

Parameter	Rated Repetitive Off-state Voltage	Off-state Leakage Current@V_{DRM}	Breakover Voltage	On-State Voltage @I_T=1.0A	Breakover Current		Holding Current		Off-State Capacitance
Symbol	V_{DRM}	I_{DRM}	V_{BO}	V_T	I_{BO-}	I_{BO+}	I_{H-}	I_{H+}	C_J
Units	Volts	uA	Volts	Volts	mA	mA	mA	mA	pF
Limit	Max	Max	Max	Max	Min	Max	Min	Max	Typ.
TSMBJ0306C	75	5	98	5	50	800	150	800	100
TSMBJ0307C	90	5	130	5	50	800	150	800	60
TSMBJ0310C	140	5	180	5	50	800	150	800	60
TSMBJ0312C	160	5	220	5	50	800	150	800	60
TSMBJ0316C	190	5	265	5	50	800	150	800	40
TSMBJ0318C	220	5	300	5	50	800	150	800	40
TSMBJ0322C	275	5	350	5	50	800	150	800	40
TSMBJ0324C	320	5	400	5	50	800	150	800	40

MAXIMUM RATED SURGE WAVEFORM

Waveform	Standard	Ipp (A)
2/10 us	GR-1089-CORE	200
8/20 us	IEC 61000-4-5	150
10/160 us	FCC Part 68	100
10/700 us	ITU-T K20/21	60
10/560 us	FCC Part 68	60
10/1000 us	GR-1089-CORE	50

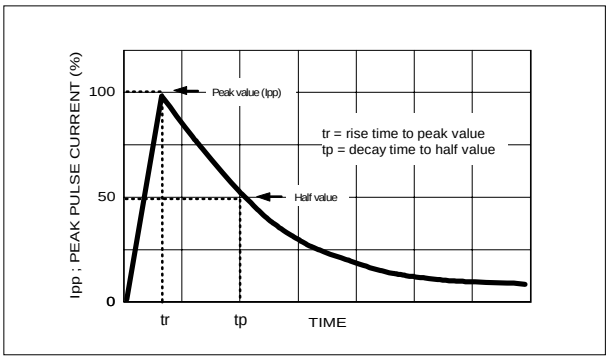

Symbol	Parameter
V_{DRM}	Stand-off voltage
I_{DRM}	Leakage current at stand-off voltage
V_{BR}	Breakdown voltage
I_{BR}	Breakdown current
V_{BO}	Breakover voltage
I_{BO}	Breakover current
I_H	Holding current NOTE: 1
V_T	On state voltage
I_{PP}	Peak pulse current
C_O	Off-state capacitance NOTE: 2

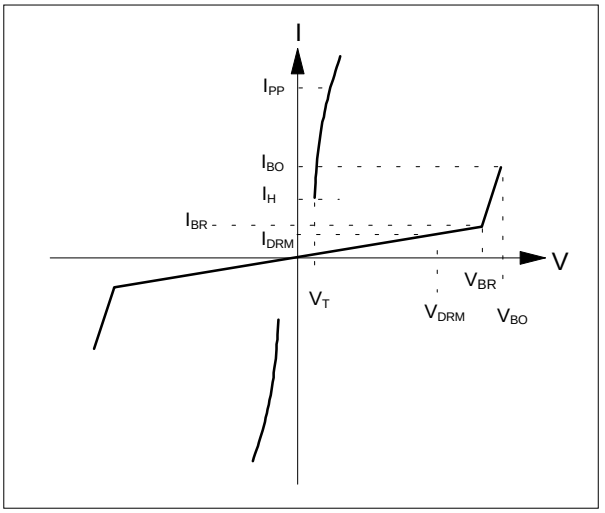

NOTE：

1. $I_H > (V_L / R_L)$ If this criterion is not obeyed, the TSPD triggers but does not return correctly to high-resistance state. The surge recovery time. It does not exceed 30ms.
2. Off-state capacitance measured at f=1.0MHz , 1.0Vrms signal , VR=2Vdc bias.

Fig.1 - Off-State Current v.s Junction Temperature

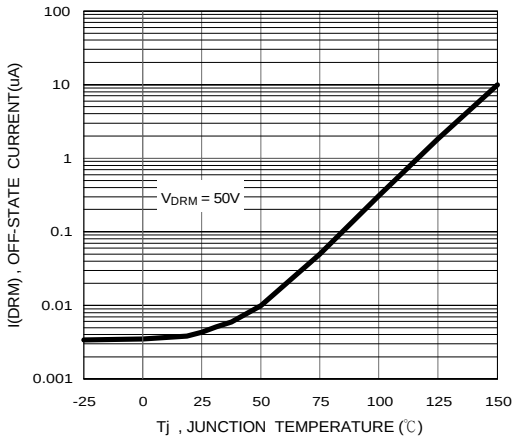

Fig.2 - Relative Variation of Breakdown Voltage v.s Junction Temperature

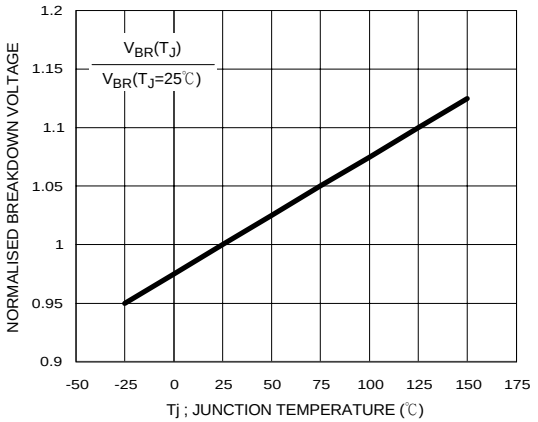

Fig.3 - Relative Variation of Breakover Voltage v.s Junction Temperature

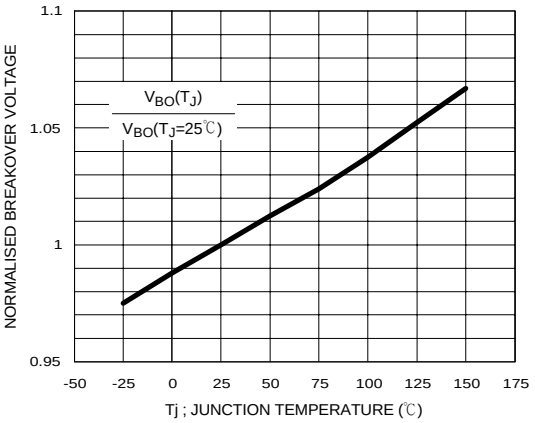

Fig.4 - On-State Current v.s On-State Voltage

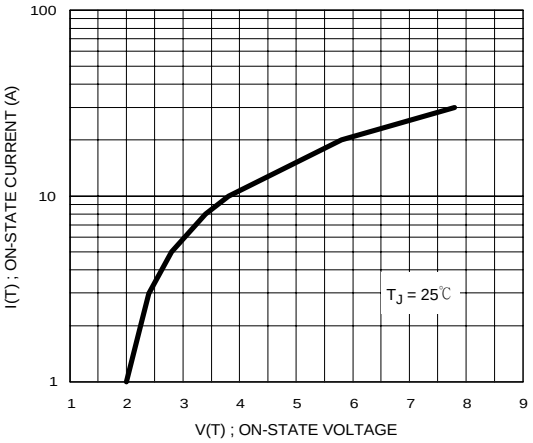

Fig.5 - Relative Variation of Holding Current v.s Junction Temperature

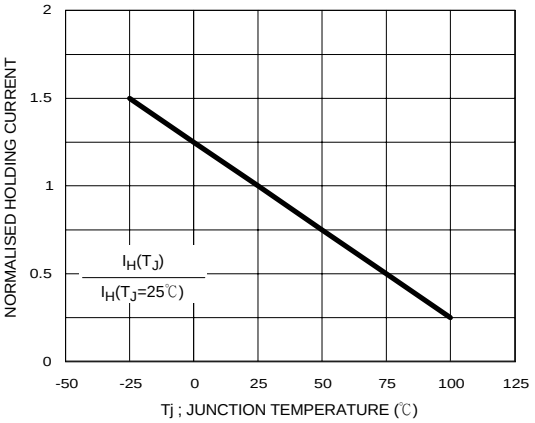

Fig.6 - Relative Variation of Junction Capacitance v.s Reverse Voltage Bias

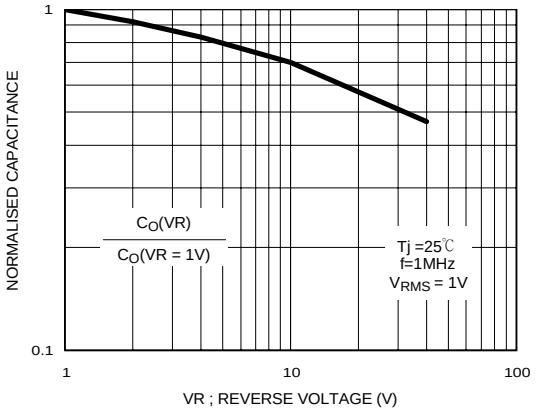

TYPICAL APPLICATION CIRCUITS

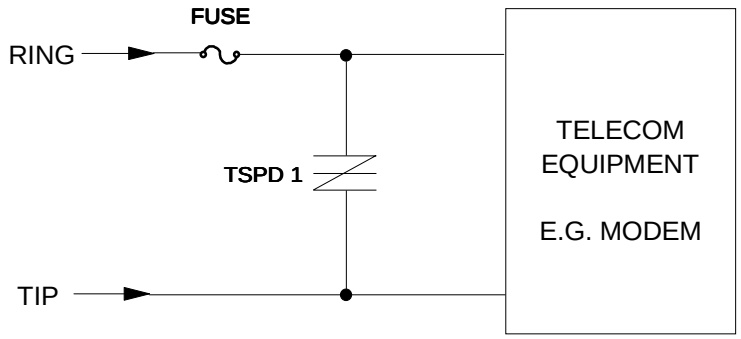

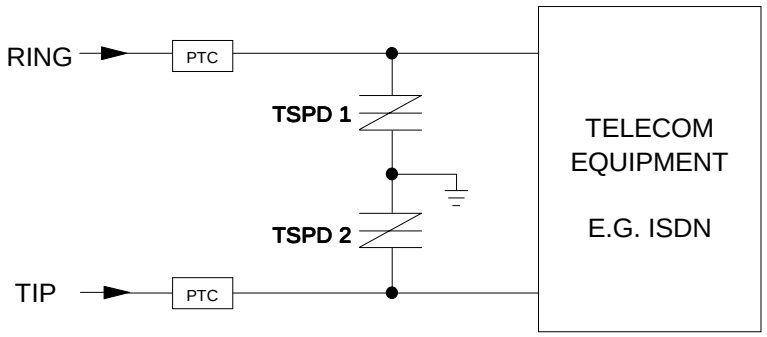

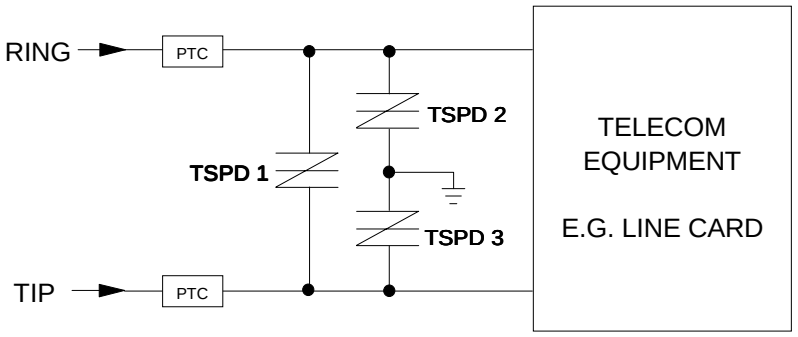

The PTC (Positive Temperature Coefficient) is an overcurrent protection device.