DISCRETE SEMICONDUCTORS

DATA SHEET

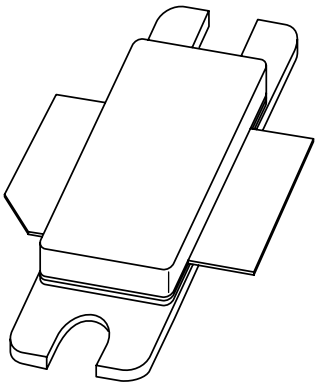

BLF1820-90
UHF power LDMOS transistor

Product specification
Supersedes data of 2001 Mar 07

2003 Feb 10

Philips
Semiconductors

PHILIPS

UHF power LDMOS transistor BLF1820-90

FEATURES

- Typical 2-tone performance at a supply voltage of 26 V and I_{DQ} of 500 mA:
  - Output power = 90 W (PEP)
  - Gain = 12 dB
  - Efficiency = 32%
  - dim = –26 dBc
- Easy power control
- Excellent ruggedness
- High power gain
- Excellent thermal stability
- Designed for broadband operation (1800 to 2000 MHz)
- Internally matched for ease of use.

APPLICATIONS

- RF power amplifiers for GSM, EDGE and CDMA base stations and multicarrier applications in the 1800 to 2000 MHz frequency range.

PINNING

PIN	DESCRIPTION
1	drain
2	gate
3	source, connected to flange

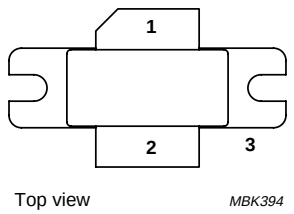

Fig.1 Simplified outline SOT502A.

DESCRIPTION

90 W LDMOS power transistor for base station applications at frequencies from 1800 to 2000 MHz.

QUICK REFERENCE DATA

RF performance at T_h = 25 °C in a common source test circuit.

MODE OF OPERATION	f (MHz)	V_{DS} (V)	P_L (W)	G_p (dB)	η_D (%)	d_{im} (dBc)
2-tone, class-AB	f_1 = 2000; f_2 = 2000.1	26	90 (PEP)	>11	>30	≤–25

LIMITING VALUES

In accordance with the Absolute Maximum Rating System (IEC 60134).

SYMBOL	PARAMETER	MIN.	MAX.	UNIT
V_{DS}	drain-source voltage	–	65	V
V_{GS}	gate-source voltage	–	±15	V
I_D	DC drain current	–	12	A
T_{stg}	storage temperature	–65	+150	°C
T_j	junction temperature	–	200	°C

CAUTION
This product is supplied in anti-static packing to prevent damage caused by electrostatic discharge during transport and handling. For further information, refer to Philips specs.: SNW-EQ-608, SNW-FQ-302A and SNW-FQ-302B.

THERMAL CHARACTERISTICS

SYMBOL	PARAMETER	CONDITIONS	VALUE	UNIT
$R_{th\ j\text{-}h}$	thermal resistance from junction to heatsink	T_h = 25 °C; note 1	0.81	K/W

Note

1. Determined under specified RF operating conditions.

CHARACTERISTICS

T_j = 25 °C unless otherwise specified.

SYMBOL	PARAMETER	CONDITIONS	MIN.	TYP.	MAX.	UNIT
$V_{(BR)DSS}$	drain-source breakdown voltage	V_{GS} = 0; I_D = 2.1 mA	65	–	–	V
V_{GSth}	gate-source threshold voltage	V_{DS} = 10 V; I_D = 210 mA	4.4	–	5.5	V
I_{DSS}	drain-source leakage current	V_{GS} = 0; V_{DS} = 26 V	–	–	15	μA
I_{DSX}	on-state drain current	V_{GS} =V_{GSth} + 9 V; V_{DS} = 10 V	27	–	–	A
I_{GSS}	gate leakage current	V_{GS} = ±15 V; V_{DS} = 0	–	–	38	nA
g_{fs}	forward transconductance	V_{DS} = 10 V; I_D = 7.5 A	–	6.2	–	S
R_{DSon}	drain-source on-state resistance	V_{GS} = V_{GSth} + 9 V; I_D = 7.5 A	–	0.1	–	Ω
C_{rss}	feedback capacitance	V_{GS} = 0; V_{DS} = 26 V; f = 1 MHz; note 1	–	5.1	–	pF

Note

1. The value of capacitance is that of the die only.

APPLICATION INFORMATION

RF performance in a common source class-AB circuit. T_h = 25 °C; $R_{th\ j\text{-}h}$ = 0.81 K/W; unless otherwise specified.

MODE OF OPERATION	f (MHz)	V_{DS} (V)	I_{DQ} (mA)	P_L (W)	G_p (dB)	η_D (%)	d_{im} (dBc)
Two-tone, class-AB	f_1 = 2000; f_2 = 2000.1	26	750	90 (PEP)	>11	>30	≤–25

Ruggedness in class-AB operation

The BLF1820-90 is capable of withstanding a load mismatch corresponding to VSWR = 10 : 1 through all phases under the following conditions: V_{DS} = 26 V; I_{DQ} = 750 mA; P_L = 90 W; f = 2000 MHz (single tone).

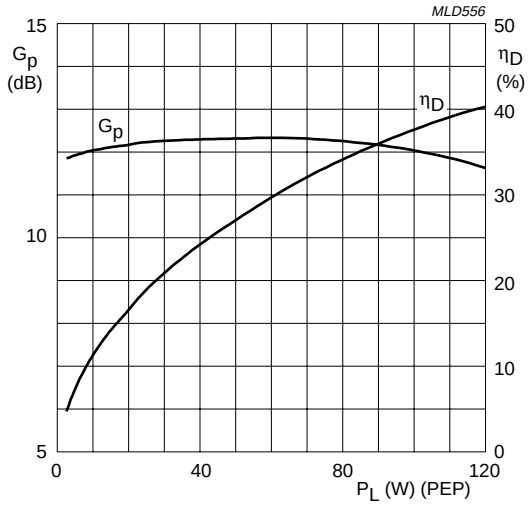

V_{DS} = 26 V; I_{DQ} = 750 mA; T_h ≤ 25 °C;
f_1 = 2000 MHz; f_2 = 2000.1 MHz.

Fig.2 Power gain and drain efficiency as functions of peak envelope load power; typical values.

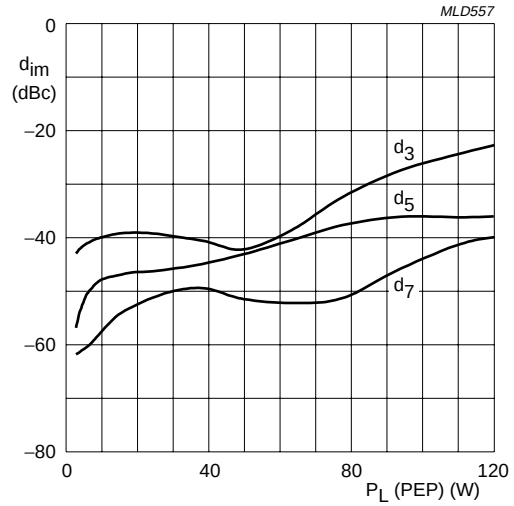

V_{DS} = 26 V; I_{DQ} = 750 mA; T_h ≤ 25 °C;
f_1 = 2000 MHz; f_2 = 2000.1 MHz.

Fig.3 Intermodulation distortion products as functions of peak envelope load power; typical values.

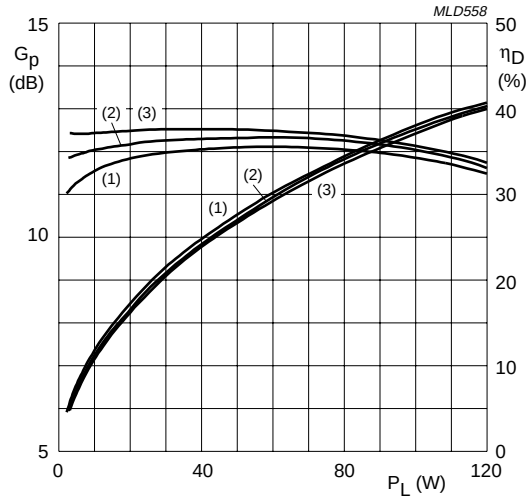

V_{DS} = 26 V; I_{DQ} = 750 mA; $T_h \leq 25$ °C;
f_1 = 2000 MHz; f_2 = 2000.1 MHz.

(1) I_{DQ} = 600 mA. (2) I_{DQ} = 750 mA. (3) I_{DQ} = 900 mA.

Fig.4 Power gain and drain efficiency as functions of average load power; typical values.

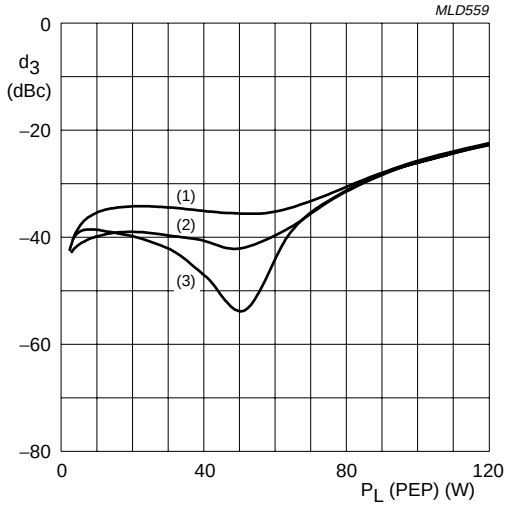

V_{DS} = 26 V; I_{DQ} = 750 mA; $T_h \leq 25$ °C;
f_1 = 2000 MHz; f_2 = 2000.1 MHz.

(1) I_{DQ} = 600 mA. (2) I_{DQ} = 750 mA. (3) I_{DQ} = 900 mA.

Fig.5 Intermodulation distortion products as functions of peak envelope load power; typical values.

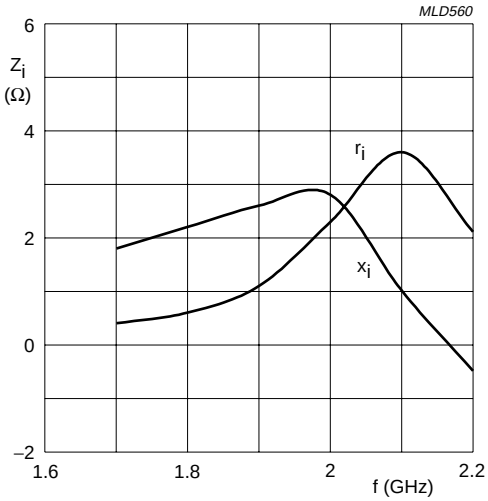

V_{DS} = 26 V; I_{DQ} = 750 mA; P_L = 90 W; $T_h \leq 25$ °C.

Fig.6 Input impedance as a function of frequency (series components); typical values.

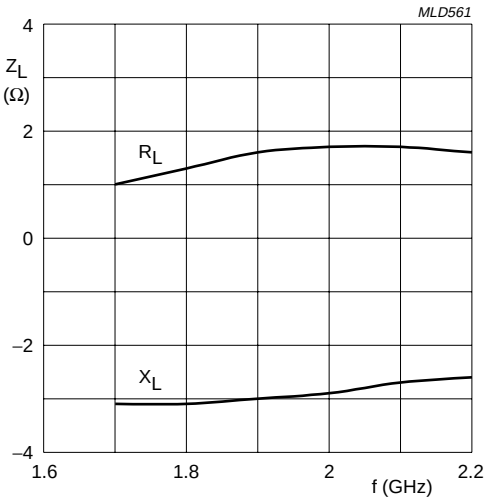

V_{DS} = 26 V; I_{DQ} = 750 mA; P_L = 90 W; $T_h \leq 25$ °C.

Fig.7 Load impedance as a function of frequency (series components); typical values.

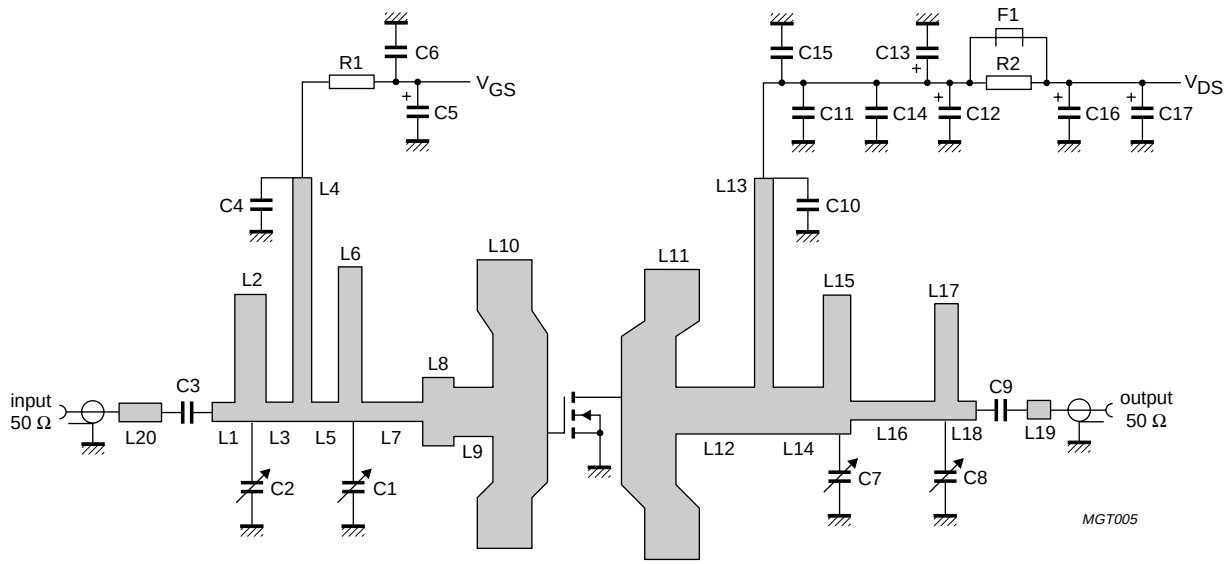

Fig.8 2 GHz class-AB test circuit.

List of components

See Figs 8 and 9.

COMPONENT	DESCRIPTION	VALUE	DIMENSIONS	CATALOGUE NO.
C1, C2, C7, C8	Tekelec variable capacitor; type 37271	0.6 to 4.5 pF		
C3, C9	multilayer ceramic chip capacitor; note 1	12 pF		
C4, C10	multilayer ceramic chip capacitor; note 2	12 pF		
C5, C12, C16	electrolytic capacitor	4.5 μF; 50 V		
C6, C11, C15	multilayer ceramic chip capacitor; note 1	1 nF		
C13, C17	electrolytic capacitor	100 μF; 63 V		2222 037 58101
C14	multilayer ceramic chip capacitor	100 nF		2222 581 16641
F1	Ferroxcube chip-bead 8DS3/3/8/9-4S2			4330 030 36301
L1	stripline; note 3	50 Ω	2.9 × 2.4 mm	
L2		10.8 Ω	4 × 16.3 mm	
L3		50 Ω	3.7 × 2.4 mm	
L4		6 Ω	2 × 30.8 mm	
L5		50 Ω	3.6 × 2.4 mm	
L6		9 Ω	3 × 19.9 mm	
L7		50 Ω	7.8 × 2.4 mm	
L8		18.5 Ω	4 × 8.8 mm	
L9		24.4 Ω	5 × 6.3 mm	
L10		5.1 Ω	7 × 37 mm	
L11		5.1 Ω	7 × 40.9 mm	
L12		25.4 Ω	10.1 × 6 mm	
L13		5.7 Ω	2.4 × 32.8 mm	
L14		25.4 Ω	6.4 × 6 mm	
L15		10 Ω	3.5 × 20.7 mm	
L16		50 Ω	10.8 × 2.4 mm	
L17		11.8 Ω	3 × 7.9 mm	
L18		50 Ω	2.3 × 2.4 mm	
L19		50 Ω	3 × 2.4 mm	
L20		50 Ω	5.5 × 2.4 mm	
R1, R2	metal film resistor	10 Ω, 0.6 W		2322 156 11009

Notes

1. American Technical Ceramics type 100B or capacitor of same quality.
2. American Technical Ceramics type 100A or capacitor of same quality.
3. The striplines are on a double copper-clad printed-circuit board with Teflon dielectric (ε_r = 2.2); thickness 0.79 mm.

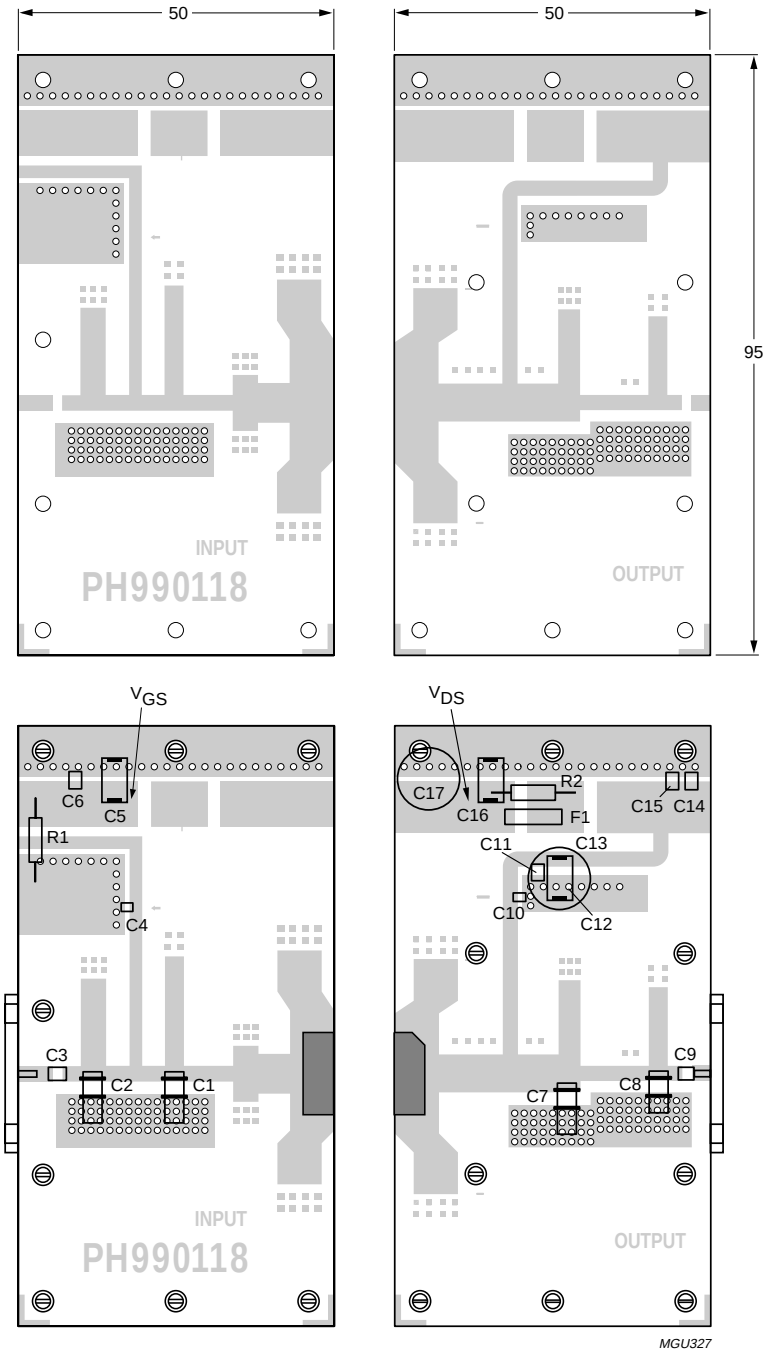

Dimensions in mm.

The components are situated on one side of the copper-clad printed-circuit board with Teflon dielectric (ε_r = 2.2), thickness 0.79 mm. The other side is unetched and serves as a ground plane.

Fig.9 Component layout for 2 GHz class-AB test circuit.

PACKAGE OUTLINE

Flanged LDMOST ceramic package; 2 mounting holes; 2 leads **SOT502A**

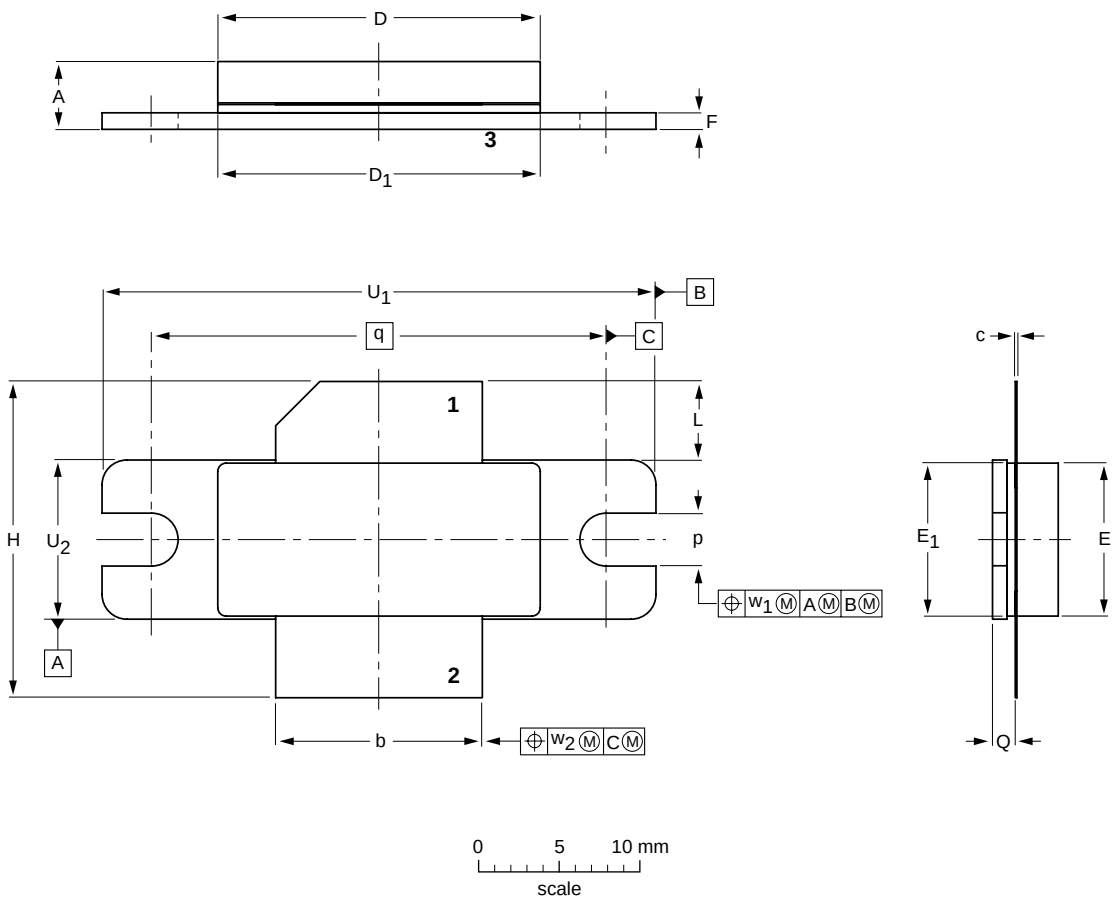

DIMENSIONS (millimetre dimensions are derived from the original inch dimensions)

UNIT	A	b	c	D	D_1	E	E_1	F	H	L	p	Q	q	U_1	U_2	w_1	w_2
mm	4.72 3.43	12.83 12.57	0.15 0.08	20.02 19.61	19.96 19.66	9.50 9.30	9.53 9.25	1.14 0.89	19.94 18.92	5.33 4.32	3.38 3.12	1.70 1.45	27.94	34.16 33.91	9.91 9.65	0.25	0.51
inches	0.186 0.135	0.505 0.495	0.006 0.003	0.788 0.772	0.786 0.774	0.374 0.366	0.375 0.364	0.045 0.035	0.785 0.745	0.210 0.170	0.133 0.123	0.067 0.057	1.100	1.345 1.335	0.390 0.380	0.01	0.02

OUTLINE VERSION	REFERENCES				EUROPEAN PROJECTION	ISSUE DATE
	IEC	JEDEC	JEITA			
SOT502A						~~99-12-28~~ 03-01-10

DATA SHEET STATUS

LEVEL	DATA SHEET STATUS(1)	PRODUCT STATUS(2)(3)	DEFINITION
I	Objective data	Development	This data sheet contains data from the objective specification for product development. Philips Semiconductors reserves the right to change the specification in any manner without notice.
II	Preliminary data	Qualification	This data sheet contains data from the preliminary specification. Supplementary data will be published at a later date. Philips Semiconductors reserves the right to change the specification without notice, in order to improve the design and supply the best possible product.
III	Product data	Production	This data sheet contains data from the product specification. Philips Semiconductors reserves the right to make changes at any time in order to improve the design, manufacturing and supply. Relevant changes will be communicated via a Customer Product/Process Change Notification (CPCN).

Notes

1. Please consult the most recently issued data sheet before initiating or completing a design.
2. The product status of the device(s) described in this data sheet may have changed since this data sheet was published. The latest information is available on the Internet at URL http://www.semiconductors.philips.com.
3. For data sheets describing multiple type numbers, the highest-level product status determines the data sheet status.

DEFINITIONS

Short-form specification — The data in a short-form specification is extracted from a full data sheet with the same type number and title. For detailed information see the relevant data sheet or data handbook.

Limiting values definition — Limiting values given are in accordance with the Absolute Maximum Rating System (IEC 60134). Stress above one or more of the limiting values may cause permanent damage to the device. These are stress ratings only and operation of the device at these or at any other conditions above those given in the Characteristics sections of the specification is not implied. Exposure to limiting values for extended periods may affect device reliability.

Application information — Applications that are described herein for any of these products are for illustrative purposes only. Philips Semiconductors make no representation or warranty that such applications will be suitable for the specified use without further testing or modification.

DISCLAIMERS

Life support applications — These products are not designed for use in life support appliances, devices, or systems where malfunction of these products can reasonably be expected to result in personal injury. Philips Semiconductors customers using or selling these products for use in such applications do so at their own risk and agree to fully indemnify Philips Semiconductors for any damages resulting from such application.

Right to make changes — Philips Semiconductors reserves the right to make changes in the products - including circuits, standard cells, and/or software - described or contained herein in order to improve design and/or performance. When the product is in full production (status ‘Production’), relevant changes will be communicated via a Customer Product/Process Change Notification (CPCN). Philips Semiconductors assumes no responsibility or liability for the use of any of these products, conveys no licence or title under any patent, copyright, or mask work right to these products, and makes no representations or warranties that these products are free from patent, copyright, or mask work right infringement, unless otherwise specified.

NOTES

Philips Semiconductors – a worldwide company

Contact information

For additional information please visit **http://www.semiconductors.philips.com**. Fax: **+31 40 27 24825**
For sales offices addresses send e-mail to: **sales.addresses@www.semiconductors.philips.com**.

SCA75

Printed in The Netherlands 613524/02/pp12 Date of release: 2003 Feb 10 Document order number: 9397 750 10916

Let's make things better.

Philips
Semiconductors

PHILIPS