查询BLY89供应商

DISCRETE SEMICONDUCTORS

DATA SHEET

BLY89C
VHF power transistor

Product specification

August 1986

Philips
Semiconductors

PHILIPS

VHF power transistor BLY89C

DESCRIPTION

N-P-N silicon planar epitaxial transistor intended for use in class-A, B and C operated mobile, industrial and military transmitters with a nominal supply voltage of 13,5 V. The transistor is resistance stabilized and is guaranteed to withstand severe load mismatch conditions with a supply over-voltage to 16,5 V. It has a 3/8" capstan envelope with a ceramic cap. All leads are isolated from the stud.

QUICK REFERENCE DATA

R.F. performance up to T_h = 25 °C in an unneutralized common-emitter class-B circuit

MODE OF OPERATION	V_{CC} V	f MHz	P_L W	G_p dB	η %	$\bar{z}_i$ Ω	$\bar{Y}_L$ mS
c.w.	13,5	175	25	>6	>70	1,6 + j1,4	210 + j5,5

PIN CONFIGURATION

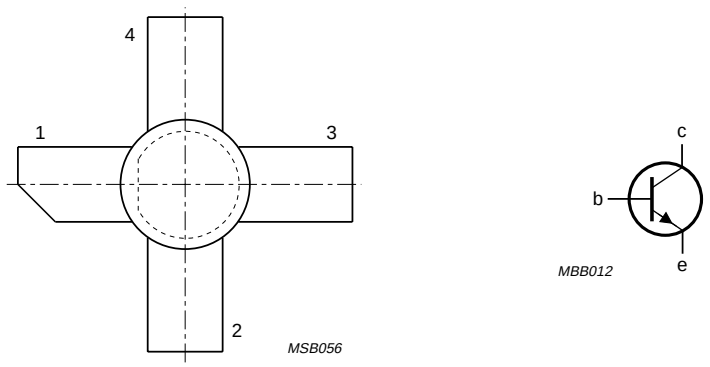

Fig.1 Simplified outline and symbol.

PINNING - SOT120

PIN	DESCRIPTION
1	collector
2	emitter
3	base
4	emitter

PRODUCT SAFETY This device incorporates beryllium oxide, the dust of which is toxic. The device is entirely safe provided that the BeO disc is not damaged.

RATINGS

Limiting values in accordance with the Absolute Maximum System (IEC 134)

Collector-emitter voltage (V_{BE} = 0)				
peak value	V_{CESM}	max	36	V
Collector-emitter voltage (open base)	V_{CEO}	max	18	V
Emitter-base voltage (open collector)	V_{EBO}	max	4	V
Collector current (average)	$I_{C(AV)}$	max	6	A
Collector current (peak value); f > 1 MHz	I_{CM}	max	12	A
R.F. power dissipation (f > 1 MHz); T_{mb} = 25 °C	P_{rf}	max	73	W

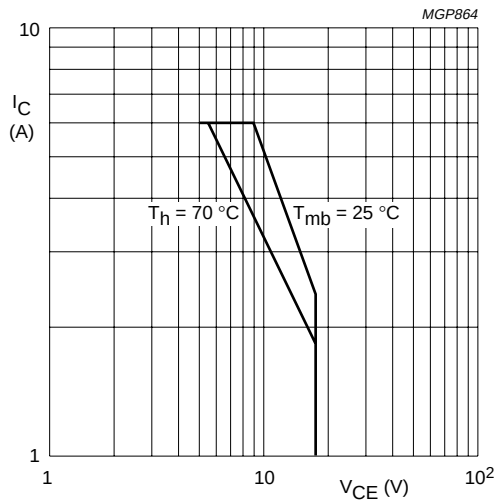

Fig.2 D.C. soar.

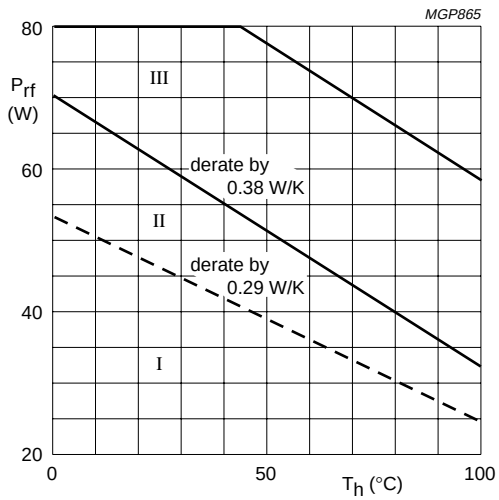

I Continuous d.c. operation
II Continuous r.f. operation
III Short-time operation during mismatch

Fig.3 R.F. power dissipation; $V_{CE} \leq 16{,}5$ V; f > 1 MHz.

THERMAL RESISTANCE

(dissipation 20 W; T_{mb} = 79 °C, i.e. T_h = 70 °C)

From junction to mounting base (d.c. dissipation)	$R_{th\ j\text{-}mb(dc)}$	=	3,1	K/W
From junction to mounting base (r.f. dissipation)	$R_{th\ j\text{-}mb(rf)}$	=	2,3	K/W
From mounting base to heatsink	$R_{th\ mb\text{-}h}$	=	0,45	K/W

CHARACTERISTICS

T_j = 25 °C

Breakdown voltage				
Collector-emitter voltage				
V_{BE} = 0; I_C = 25 mA	$V_{(BR)CES}$	>	36	V
Collector-emitter voltage				
open base; I_C = 50 mA	$V_{(BR)CEO}$	>	18	V
Emitter-base voltage				
open collector; I_E = 10 mA	$V_{(BR)EBO}$	>	4	V
Collector cut-off current				
V_{BE} = 0; V_{CE} = 18 V	I_{CES}	<	10	mA
Transient energy				
L = 25 mH; f = 50 Hz				
open base	E	>	8	ms
$-V_{BE}$ = 1,5 V; R_{BE} = 33 Ω	E	>	8	ms
D.C. current gain(1)				
I_C = 2,5 A; V_{CE} = 5 V	h_{FE}	typ	50	
			10 to 80	
Collector-emitter saturation voltage(1)				
I_C = 7,5 A; I_B = 1,5 A	V_{CEsat}	typ	1,7	V
Transition frequency at f = 100 MHz(1)				
I_C = 2,5 A; V_{CE} = 13,5 V	f_T	typ	800	MHz
I_C = 7,5 A; V_{CE} = 13,5 V	f_T	typ	750	MHz
Collector capacitance at f = 1 MHz				
I_E = I_e = 0; V_{CB} = 15 V	C_c	typ	65	pF
		<	90	pF
Feedback capacitance at f = 1 MHz				
I_C = 100 mA; V_{CE} = 15 V	C_{re}	typ	41	pF
Collector-stud capacitance	C_{cs}	typ	2	pF

Note

1. Measured under pulse conditions: $t_p \leq 200$ µs; $\delta \leq 0{,}02$.

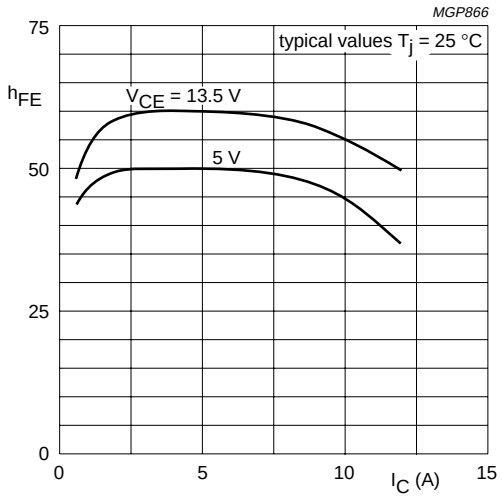

Fig.4

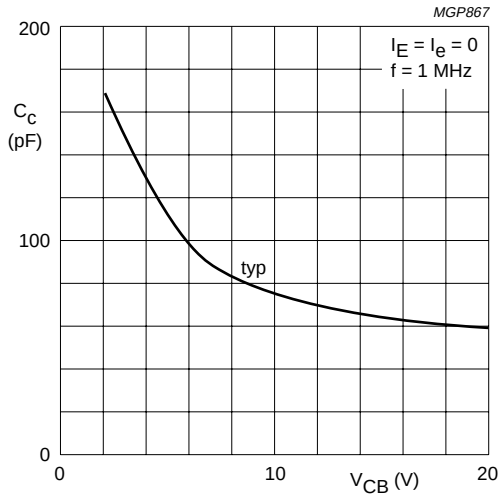

Fig.5

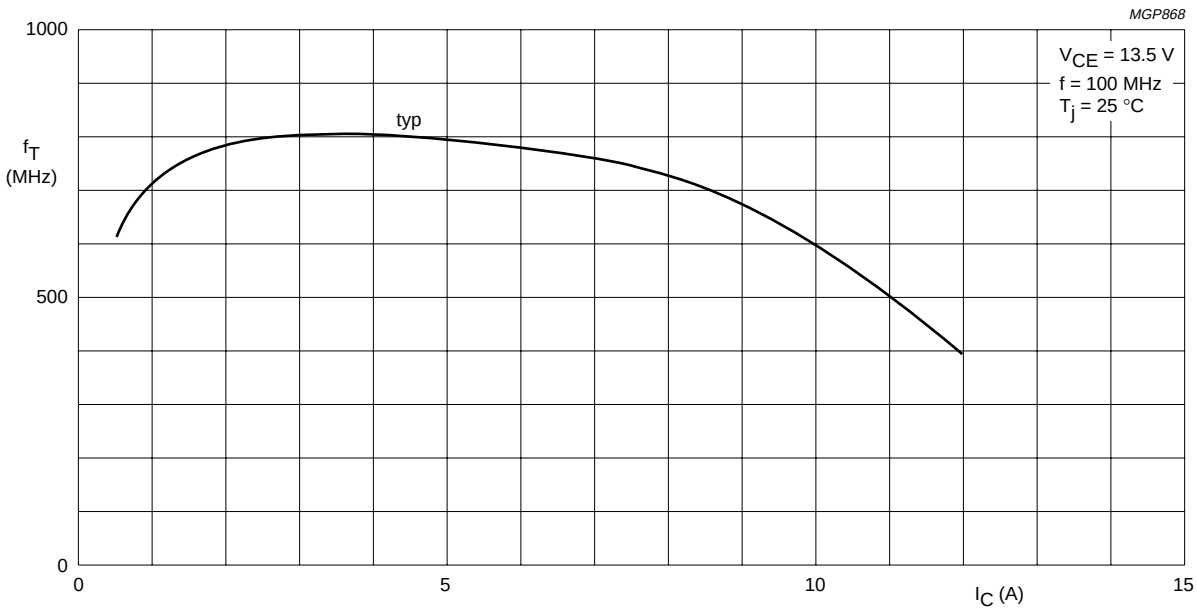

Fig.6

APPLICATION INFORMATION

R.F. performance in c.w. operation (unneutralized common-emitter class-B circuit)

T_h = 25 °C

f (MHz)	V_{CC} (V)	P_L(W)	P_S(W)	G_p (dB)	I_C (A)	η (%)	$\bar{z}_i$ (Ω)	$\bar{Y}_L$ (mS)
175	13,5	25	< 6,25	> 6	< 2,64	> 70	1,6 + j1,4	210 + j5,5
175	12,5	25	–	typ 6,6	–	typ 75	–	–

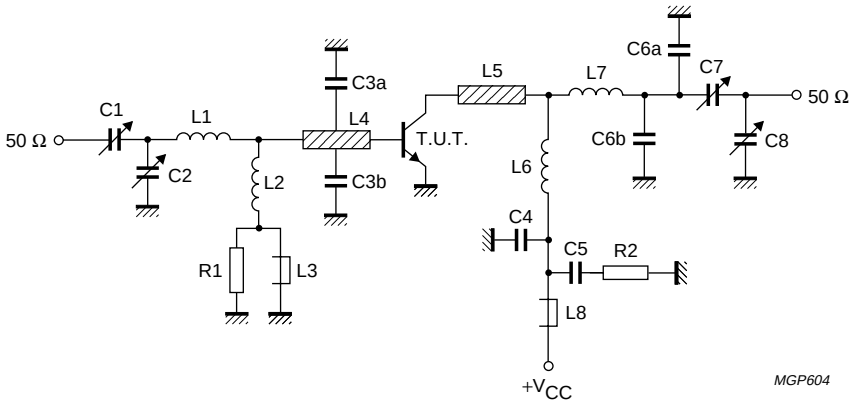

Fig.7 Test circuit for 175 MHz.

List of components:

C1 = 2,5 to 20 pF film dielectric trimmer (cat. no. 2222 809 07004)

C2 = C8 = 4 to 40 pF film dielectric trimmer (cat. no. 2222 809 07008)

C3a = C3b = 47 pF ceramic capacitor (500 V)

C4 = 120 pF ceramic capacitor

C5 = 100 nF polyester capacitor

C6a = C6b = 8,2 pF ceramic capacitor (500 V)

C7 = 5 to 60 pF film dielectric trimmer (cat. no. 2222 809 07011)

L1 = 1 turn enamelled Cu wire (1,6 mm); int. dia. 9,0 mm; leads 2 × 5 mm

L2 = 100 nH; 7 turns closely wound enamelled Cu wire (0,5 mm); int. dia. 3 mm; leads 2 × 5 mm

L3 = L8 = Ferroxcube choke coil (cat. no. 4312 020 36640)

L4 = L5 = strip (12 mm × 6 mm); taps for C3a and C3b at 5 mm from transistor

L6 = 2 turns enamelled Cu wire (1,6 mm); int. dia. 5,0 mm; length 6,0 mm; leads 2 × 5 mm

L7 = 2 turns enamelled Cu wire (1,6 mm); int. dia. 4,5 mm; length 6,0 mm; leads 2 × 5 mm

L4 and L5 are strips on a double Cu-clad printed-circuit board with epoxy fibre-glass dielectric, thickness 1/16".

R1 = 10 Ω (±10%) carbon resistor

R2 = 4,7 Ω (±5%) carbon resistor

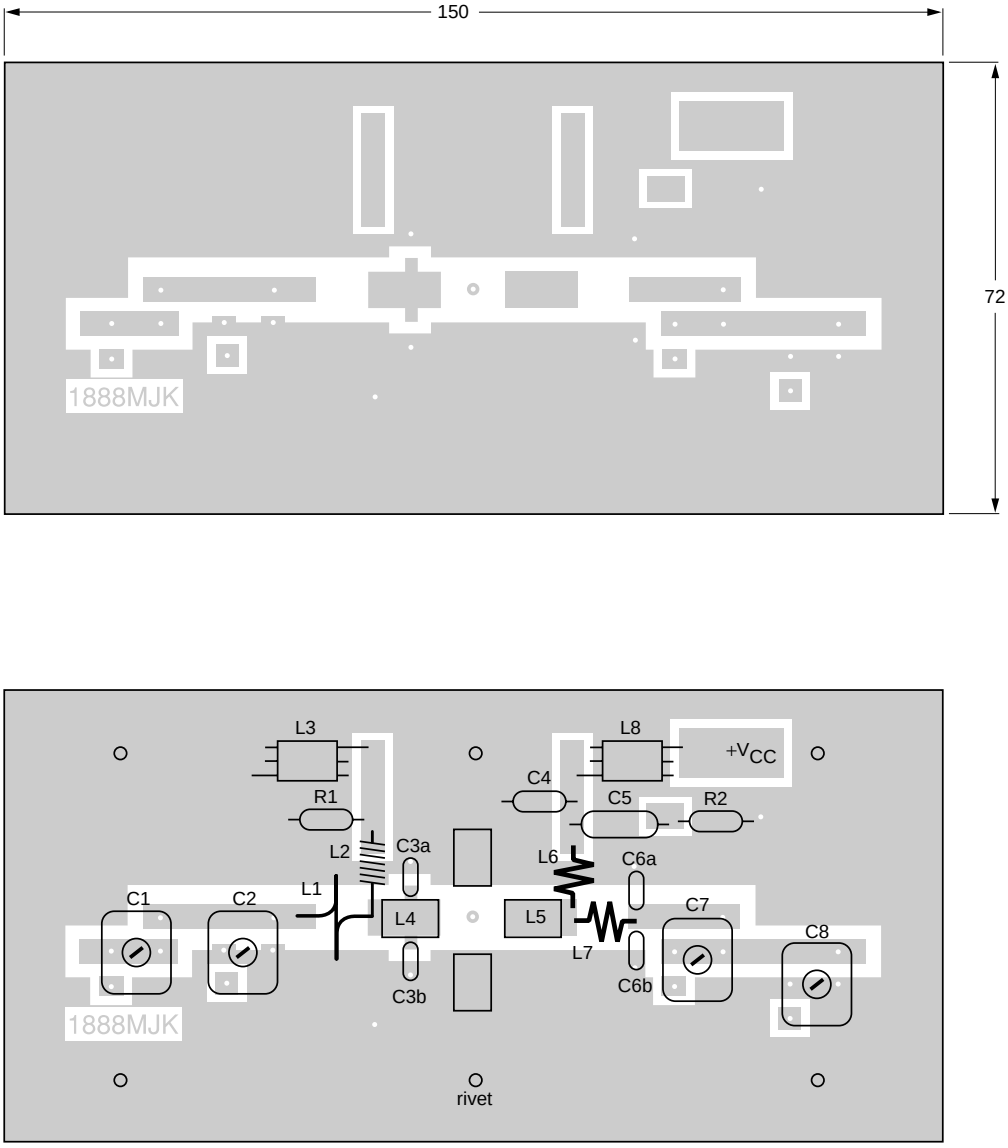

Fig.8 Component layout and printed-circuit board for 175 MHz test circuit.

The circuit and the components are situated on one side of the epoxy fibre-glass board, the other side being fully metallized to serve as earth. Earth connections are made by means of hollow rivets, whilst under the emitter leads Cu straps are used for a direct contact between upper and lower sheets.

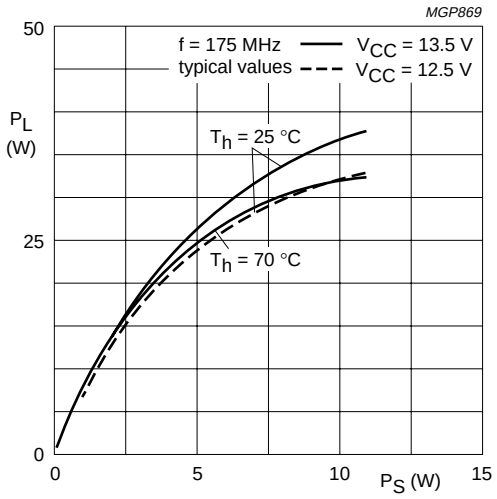

Fig.9

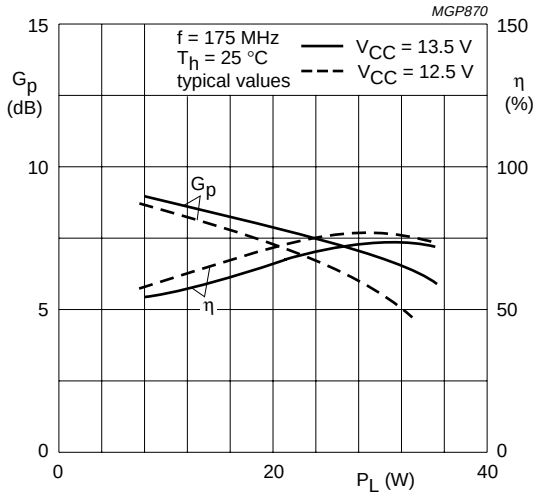

Fig.10

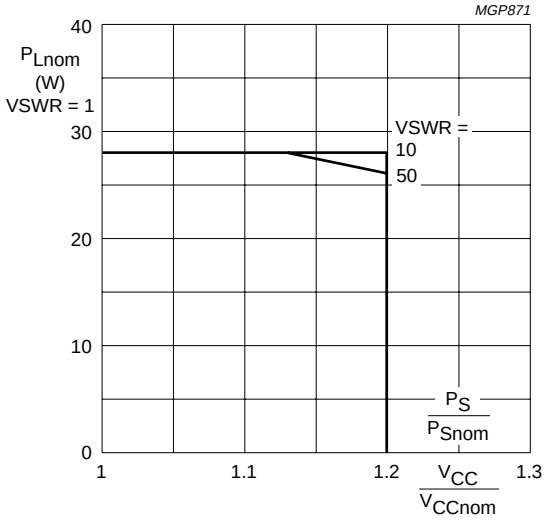

Fig.11 R.F. soar.

Conditions for R.F. SOAR

f = 175 MHz
T_h = 70 °C
$R_{th\ mb\text{-}h}$ = 0,45 K/W
V_{CCnom} = 13,5 V
$P_S = P_{Snom}$ at V_{CCnom} = 13,5 V and VSWR = 1

The transistor has been developed for use with unstabilized supply voltages. As the output power and drive power increase with the supply voltage, the nominal output power must be derated in accordance with the graph for safe operation at supply voltages other than the nominal. The graph shows the permissible output power under nominal conditions (VSWR = 1), as a function of the expected supply over-voltage ratio with VSWR as parameter.

The graph applies to the situation in which the drive (P_S/P_{Snom}) increases linearly with supply over-voltage ratio.

OPERATING NOTE

Below 50 MHz a base-emitter resistor of 10 Ω is recommended to avoid oscillation. This resistor must be effective for r.f. only.

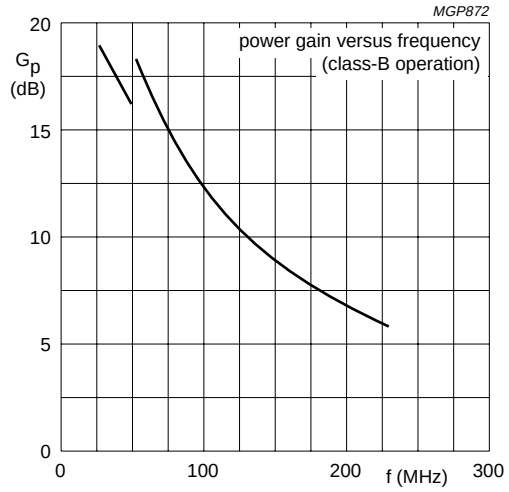

V_{CC} = 13,5 V
P_L = 25 W
T_h = 25 °C
typical values

Fig.12

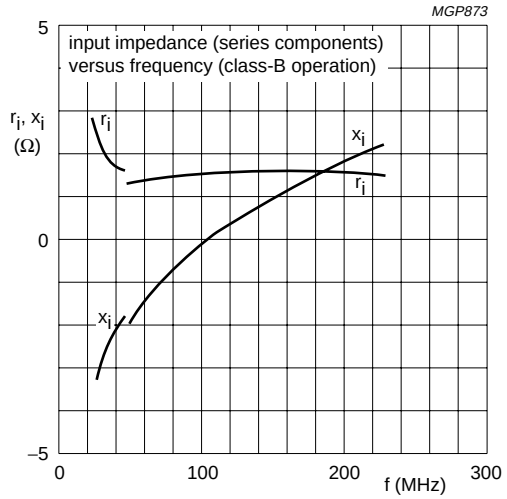

V_{CC} = 13,5 V
P_L = 25 W
T_h = 25 °C
typical values

Fig.13

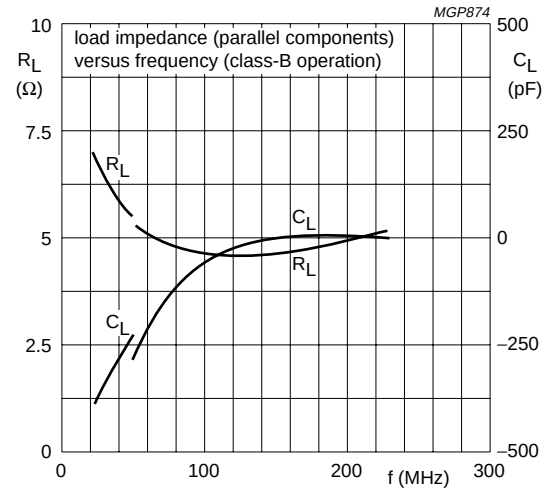

V_{CC} = 13,5 V
P_L = 25 W
T_h = 25 °C
typical values

Fig.14

PACKAGE OUTLINE

Studded ceramic package; 4 leads **SOT120A**

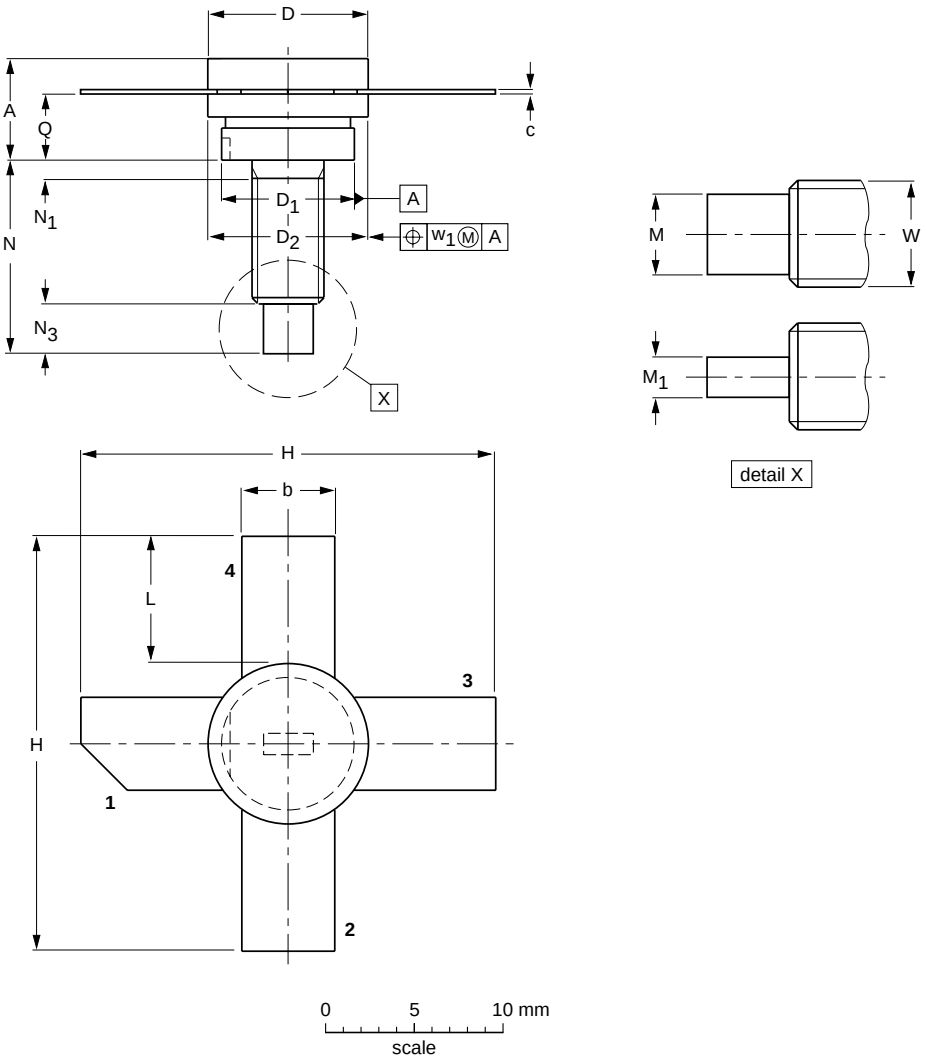

DIMENSIONS (millimetre dimensions are derived from the original inch dimensions)

UNIT	A	b	c	D	D_1	D_2	H	L	M	M_1	N	N_1	N_3	Q	W	w_1
mm	5.97 4.74	5.90 5.48	0.18 0.14	9.73 9.47	8.39 8.12	9.66 9.39	27.44 25.78	9.00 8.00	3.41 2.92	1.66 1.39	12.83 11.17	1.60 0.00	3.31 2.54	4.35 3.98	8-32 UNC	0.38
inches	0.283 0.248	0.232 0.216	0.007 0.004	0.383 0.373	0.330 0.320	0.380 0.370	1.080 1.015	0.354 0.315	0.134 0.115	0.065 0.055	0.505 0.440	0.063 0.000	0.130 0.100	0.171 0.157		0.015

OUTLINE VERSION	REFERENCES				EUROPEAN PROJECTION	ISSUE DATE
	IEC	JEDEC	EIAJ			
SOT120A						97-06-28

DEFINITIONS

Data Sheet Status	
Objective specification	This data sheet contains target or goal specifications for product development.
Preliminary specification	This data sheet contains preliminary data; supplementary data may be published later.
Product specification	This data sheet contains final product specifications.
Limiting values	
Limiting values given are in accordance with the Absolute Maximum Rating System (IEC 134). Stress above one or more of the limiting values may cause permanent damage to the device. These are stress ratings only and operation of the device at these or at any other conditions above those given in the Characteristics sections of the specification is not implied. Exposure to limiting values for extended periods may affect device reliability.	
Application information	
Where application information is given, it is advisory and does not form part of the specification.	

LIFE SUPPORT APPLICATIONS

These products are not designed for use in life support appliances, devices, or systems where malfunction of these products can reasonably be expected to result in personal injury. Philips customers using or selling these products for use in such applications do so at their own risk and agree to fully indemnify Philips for any damages resulting from such improper use or sale.