查询BQ2014H供应商 捷多邦，专业PCB打样工厂，24小时加急出货

Benchmarq Products from Texas Instruments

Preliminary **bq2014H**

Low-Cost NiCd/NiMH Gas Gauge IC

Features

- Accurate measurement of available capacity in NiCd or NiMH batteries
- Low-cost battery management solution for pack integration
  - As little as ½ square inch of PCB for complete circuit
  - Low operating current (120µA typical)
  - Less than 100nA of data retention current
- High-speed (5kb/s) single-wire communication interface (HDQ bus) for critical battery parameters
- Communication with an external charge controller such as the bq2004
- Direct drive of remaining capacity LEDs
- Automatic rate and temperature compensation of measurements
- 16-pin narrow SOIC

General Description

The bq2014H NiCd/NiMH Gas Gauge IC is intended for battery-pack or in-system installation to maintain an accurate record of available battery capacity. The IC monitors a voltage drop across a sense resistor connected in series between the negative battery terminal and ground to determine charge and discharge activity of the battery. Compensations for battery temperature, self-discharge, and rate of discharge are applied to the charge counter to provide available capacity information across a wide range of operating conditions. Battery capacity is automatically recalibrated, or "learned," in the course of a discharge cycle from full to empty.

Nominal available capacity may be directly indicated using a five-segment LED display. The bq2014H also supports a simple single-line bidirectional serial link to an external processor (common ground). The 5kb/s HDQ bus interface reduces communications overhead in the external microcontroller.

Internal registers include available capacity and energy, temperature, voltage and current, and battery status. The external processor may also overwrite some of the bq2014H gas gauge data registers.

The bq2014H can operate from the batteries in the pack. The REF output and an external transistor allow a simple, inexpensive voltage regulator to supply power to the circuit from the cells.

Pin Connections

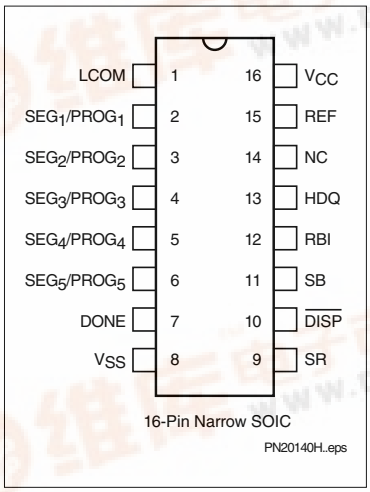

Pin Names

LCOM	LED common output	V_{SS}	System ground
$SEG_1/PROG_1$	LED segment 1/ program 1 input	SR	Sense resistor input
$SEG_2/PROG_2$	LED segment 2/ program 2 input	$\overline{DISP}$	Display control input
$SEG_3/PROG_3$	LED segment 3/ program 3 input	SB	Battery sense input
$SEG_4/PROG_4$	LED segment 4/ program 4 input	RBI	Register backup input
$SEG_5/PROG_5$	LED segment 5/ program 5 input	HDQ	Serial communications input/output
DONE	Charge complete input	NC	No connect
		REF	Voltage reference output
		V_{CC}	Supply voltage

SLUS030–JUNE 1999

找PDF 维库一下 pdf.dzsc.com

Pin Descriptions

LCOM **LED common output**

Open-drain output that switches V_{CC} to source current for the LEDs. The switch is off during initialization to allow reading of the soft pull-up or pull-down program resistors. LCOM is also high impedance when the display is off.

SEG_1–SEG_5 **LED display segment outputs (dual function with $PROG_1$–$PROG_5$)**

Outputs that each may activate an LED to sink the current sourced from LCOM.

$PROG_1$–$PROG_2$ **Programmed full count selection inputs (dual function with SEG_1–SEG_2)**

Three-level input pins that define the programmed full count (PFC) thresholds described in Table 2.

$PROG_3$–$PROG_4$ **Power gauge scale selection inputs (dual function with SEG_3–SEG_4)**

Three-level input pins that define the scale factor described in Table 2.

$PROG_5$ **Self-discharge rate selection (dual function with SEG_5)**

Three-level input pin that defines the self-discharge and battery-compensation factors as shown in Table 1.

DONE **Charge complete input**

Communicates the status of an external charge-controller such as the bq2004 Fast-Charge IC to the bq2014H. Note: This pin must be pulled down to V_{SS} using a 200kΩ resistor.

V_{SS} **Ground**

SR **Sense resistor input**

The voltage drop (V_{SR}) across the sense resistor R_S is monitored and integrated over time to interpret charge and discharge activity. $V_{SR} < V_{SS}$ indicates discharge, and $V_{SR} > V_{SS}$ indicates charge. The effective voltage drop, V_{SRO}, as seen by the bq2014H is $V_{SR} + V_{OS}$.

$\overline{DISP}$ **Display control input**

$\overline{DISP}$ high disables the LED display. $\overline{DISP}$ tied to V_{CC} allows $PROG_X$ to connect directly to V_{CC} or V_{SS} instead of through a pull-up or pull-down resistor. $\overline{DISP}$ floating allows the LED display to be active during charge. $\overline{DISP}$ low activates the display. See Table 1.

SB **Secondary battery input**

Monitors the battery cell-voltage potential through a high-impedance resistive divider network for end-of-discharge voltage (EDV) thresholds and for battery-removed detection.

RBI **Register backup input**

Provides backup potential to the bq2014H registers while $V_{CC} \leq 3V$. A storage capacitor or a battery can be connected to RBI.

HDQ **Serial communication input/output**

This is the open-drain bidirectional communications port.

NC **No connect**

REF **Voltage reference output**

REF provides a voltage reference output for an optional microregulator.

V_{CC} **Supply voltage input**

Functional Description

General Operation

The bq2014H determines battery capacity by monitoring the amount of current input to or removed from a rechargeable battery. The bq2014H measures discharge and charge currents, measures battery voltage, estimates self-discharge, monitors the battery for low battery-voltage thresholds, and compensates for temperature and charge/discharge rate. Current measurement is made by monitoring the voltage across a small-value series sense resistor between the negative battery terminal and ground. The bq2014H compensates the nominal available capacity register for discharge rate and temperature and reports the compensated available capacity. The bq2014H uses the compensated available capacity to drive the LED display. In addition, the bq2014H estimates the available energy using the average battery voltage during the discharge cycle and remaining compensated available capacity.

Figure 1 shows a typical battery pack application of the bq2014H using the LED display capability as a charge-state indicator. The bq2014H is configured to display capacity in relative display mode. The relative display mode uses the last measured discharge capacity of the battery as the battery "full" reference. A push-button display feature is available for momentarily enabling the LED display.

The bq2014H monitors the charge and discharge currents as a voltage across a sense resistor. (See R_S in Figure 1.) A filter between the negative battery terminal and the SR pin is required.

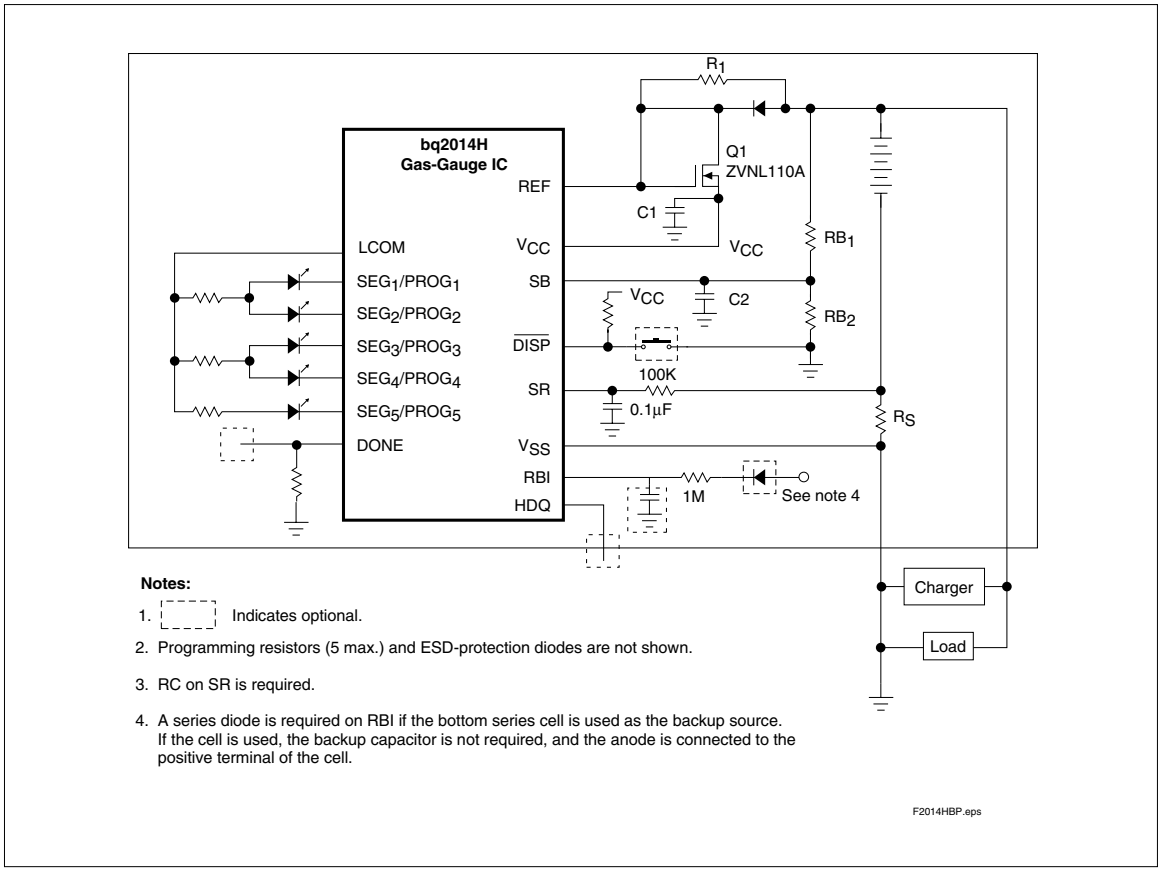

Figure 1. Battery Pack Application Diagram—LED Display

Voltage Thresholds

In conjunction with monitoring V_{SR} for charge/discharge currents, the bq2014H monitors the battery potential through the SB pin for the end-of-discharge voltage (EDV) thresholds.

The EDV threshold levels are used to determine when the battery has reached an "empty" state.

The EDV thresholds for the bq2014H are programmable with the default values fixed as follows:

EDV1 (first) = 0.76V

EDVF (final) = EDV1 - 0.025V = 0.735V

The battery voltage divider (RB1 and RB2 in Figure 1) is used to scale these values to the desired threshold.

If V_{SB} is below either of the two EDV thresholds, the associated flag is latched and remains latched, independent of V_{SB}, until the next valid charge.

EDV monitoring is disabled if the discharge rate is greater than 2C (OVLD Flag = 1) and resumes ½ second after the rate falls below 2C. The V_{SB} value is available over the serial port.

RBI Input

The RBI input pin is used with a storage capacitor or external supply to provide backup potential to the internal bq2014H registers when V_{CC} drops below 3.0V. V_{CC} is output on RBI when V_{CC} is above 3.0V. If using an external supply (such as the bottom series cell) as the backup source, an external diode is required for isolation.

Reset

The bq2014H can be reset by removing V_{CC} and grounding the RBI pin for 15 seconds or by commands over the serial port. The serial port reset command sequence requires writing 00h to register PPFC (address = 1Eh) and then writing 00h to register LMD (address = 05h).

Temperature

The bq2014H internally determines the temperature in 10°C steps centered from approximately -35°C to +85°C. The temperature steps are used to adapt charge and discharge rate compensations, self-discharge counting, and available charge display translation.

The temperature range is available over the serial port in 10°C increments, as shown in the following table

TMP (hex)	Temperature Range
0x	< -30°C
1x	-30°C to -20°C
2x	-20°C to -10°C
3x	-10°C to 0°C
4x	0°C to 10°C
5x	10°C to 20°C
6x	20°C to 30°C
7x	30°C to 40°C
8x	40°C to 50°C
9x	50°C to 60°C
Ax	60°C to 70°C
Bx	70°C to 80°C
Cx	> 80°C

Layout Considerations

The bq2014H measures the voltage differential between the SR and V_{SS} pins. V_{OS} (the offset voltage at the SR pin) is greatly affected by PC board layout. For optimal results, the PC board layout should follow the strict rule of a single-point ground return. Sharing high-current ground with small-signal ground causes undesirable noise on the small-signal nodes. Additionally:

- The capacitors (C1 and C2) should be placed as close as possible to the V_{CC} and SB pins, respectively, and their paths to V_{SS} should be as short as possible. A high-quality ceramic capacitor of 0.1µF is recommended for V_{CC}.
- The sense-resistor capacitor should be placed as close as possible to the SR pin.
- The sense resistor (R_S) should be as close as possible to the bq2014H.

Gas Gauge Operation

The operational overview diagram in Figure 2 illustrates the operation of the bq2014H. The bq2014H accumulates a measure of charge and discharge currents, as well as an estimation of self-discharge. The accumulated charge and discharge currents are adjusted for temperature and rate to provide the indication of compensated available capacity to the host system or user.

The main counter, Nominal Available Capacity (NAC), represents the available battery capacity at any given time. Battery charging increments the NAC register, while battery discharging and self-discharge decrement the NAC register and increment the DCR (Discharge Count Register).

The Discharge Count Register is used to update the Last Measured Discharge (LMD) register only if a complete battery discharge from full to empty occurs without any partial battery charges. Therefore, the bq2014H adapts its capacity determination based on the actual conditions of discharge.

The battery's initial capacity equals the Programmed Full Count (PFC) shown in Table 2. Until LMD is updated, NAC counts up to but not beyond this threshold during subsequent charges. This approach allows the gas gauge to be charger-independent and compatible with any type of charge regime.

1. **Last Measured Discharge (LMD) or learned battery capacity:**

   LMD is the last measured discharge capacity of the battery. On initialization (application of V_{CC} or battery replacement), LMD = PFC. During subsequent discharges, the LMD is updated with the latest measured capacity in the Discharge Count Register representing a discharge from full to below EDV1. A qualified discharge is necessary for a capacity transfer from the DCR to the LMD register. The LMD also serves as the 100% reference threshold used by the relative display mode.

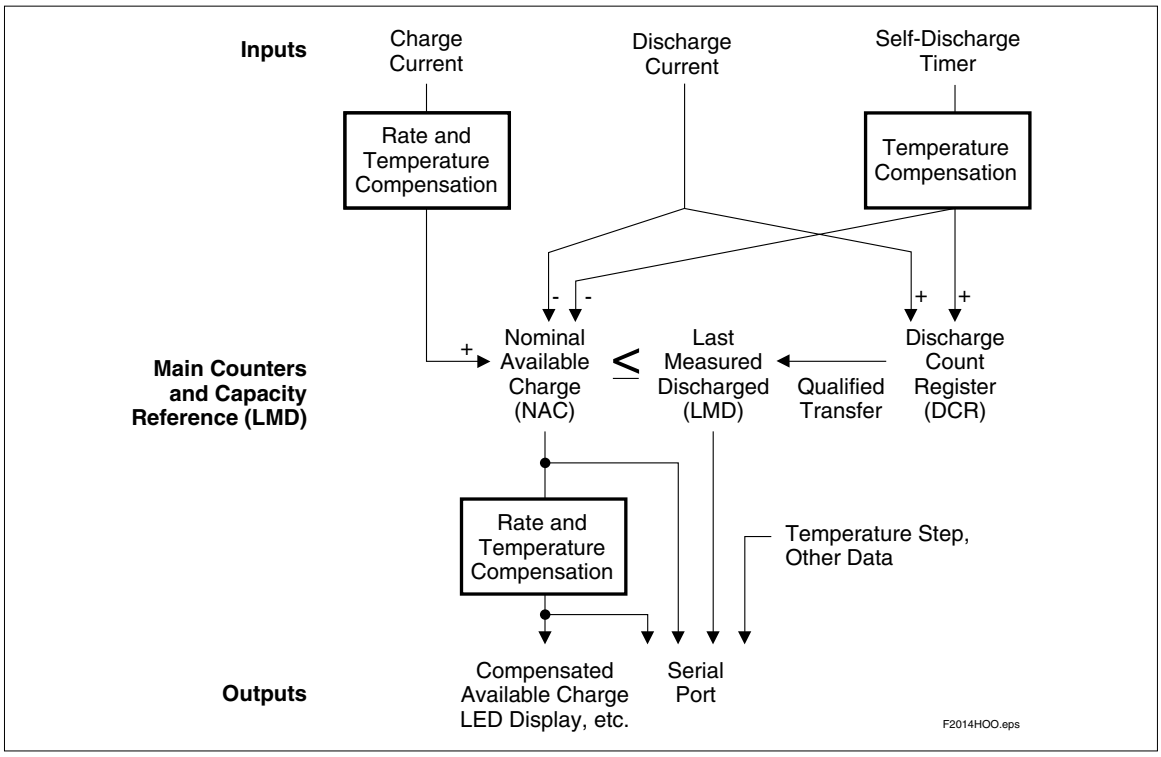

Figure 2. Operational Overview

2. Programmed Full Count (PFC) or initial battery capacity:

The initial LMD and gas gauge rate values are programmed by using $PROG_1$–$PROG_4$. The bq2014H is configured for a given application by selecting a PFC value from Table 2. The correct PFC may be determined by multiplying the rated battery capacity in mAh by the sense resistor value:

Battery capacity (mAh) ∗ sense resistor (Ω) =

PFC (mVh)

Selecting a PFC slightly less than the rated capacity provides a conservative capacity reference until the bq2014H "learns" a new capacity reference.

Example: Selecting a PFC Value

Given:

Sense resistor = 0.05Ω
Number of cells = 10
Capacity = 3500mAh, NiMH
Current range = 50mA to 1A
Relative display mode
Self-discharge = $^{NAC}/_{47}$ per day @ 25°C
Voltage drop over sense resistor = 2.5mV to 50mV
Nominal discharge voltage = 1.2V

Therefore:

3500mAh ∗ 0.05Ω = 175mVh

Table 1. Self-Discharge and Capacity Compensation

Pin Connection	$PROG_5$ Self-Discharge Rate	$\overline{DISP}$ Display State
H	Disabled	LEDs disabled
Z	$^{NAC}/_{64}$	LEDs on when charging
L	$^{NAC}/_{47}$	LEDs on for 4s

Table 2. bq2014H Programmed Full Count mVh, V_{SR} Gain Selections

$PROG_X$		Programmed Full Count (PFC)	$PROG_4$ = L			$PROG_4$ = Z or H			Units
1	2		$PROG_3$ = H	$PROG_3$ = Z	$PROG_3$ = L	$PROG_3$ = H	$PROG_3$ = Z	$PROG_3$ = L	
-	-	-	SCALE = 1/80	SCALE = 1/160	SCALE = 1/320	SCALE = 1/640	SCALE = 1/1280	SCALE = 1/2560	mVh/ count
H	H	49152	614	307	154	76.8	38.4	19.2	mVh
H	Z	45056	563	282	141	70.4	35.2	17.6	mVh
H	L	40960	512	256	128	64.0	32.0	16.0	mVh
Z	H	36864	461	230	115	57.6	28.8	14.4	mVh
Z	Z	33792	422	211	106	53.0	26.4	13.2	mVh
Z	L	30720	384	192	96.0	48.0	24.0	12.0	mVh
L	H	27648	346	173	86.4	43.2	21.6	10.8	mVh
L	Z	25600	320	160	80.0	40.0	20.0	10.0	mVh
L	L	22528	282	141	70.4	35.2	17.6	8.8	mVh
V_{SR} equivalent to 2 counts/s (nom.)			90	45	22.5	11.25	5.6	2.8	mV

Select:

PFC = 27648 counts or 173mVh
$PROG_1$ = low
$PROG_2$ = high
$PROG_3$ = float
$PROG_4$ = low
$PROG_5$ = low

The initial full battery capacity is 173mVh (3460mAh) until the bq2014H "learns" a new capacity with a qualified discharge from full to EDV1.

3. **Nominal Available Capacity (NAC):**

NAC counts up during charge to a maximum value of LMD and down during discharge and self-discharge to 0. NAC is reset to 0 on initialization and on the first valid charge following discharge to EDV1. To prevent overstatement of charge during periods of overcharge, NAC stops incrementing when NAC = LMD or 0.94 ∗ LMD if T < 0°C.

4. **Discharge Count Register (DCR):**

The DCR counts up during discharge independent of NAC and could continue increasing after NAC has decremented to 0. Prior to NAC = 0 (empty battery), both discharge and self-discharge increment the DCR. After NAC = 0, only discharge increments the DCR. The DCR resets to 0 when NAC ≥ 0.94 ∗ LMD and a discharge is detected. The DCR does not roll over but stops counting when it reaches FFh.

The DCR value becomes the new LMD value on the first charge after a valid discharge to V_{EDV1} if all the following conditions are met:

- No valid charge initiations (charges greater than 2 NAC updates where $V_{SRO} > V_{SRQ}$) occurred during the period between NAC ≥ 0.94 ∗ LMD and EDV1.
- The self-discharge is less than 6.25% of NAC.
- The temperature is ≥ 0°C when the EDV1 level is reached during discharge.
- The discharge begins when NAC ≥ 0.94 ∗ LMD.
- VDQ is set.

The valid discharge flag (VDQ) indicates whether the present discharge is valid for LMD update. If the DCR update value is less than 0.94 ∗ LMD, LMD will only be modified by 0.94 ∗ LMD. This prevents invalid DCR values from corrupting LMD.

5. **Scaled Available Energy (SAE):**

SAE is useful in determining the available energy within the battery, and may provide a more useful capacity reference in battery chemistries with sloped voltage profiles during discharge. SAE may be converted to an mWh value using the following formula:

$$E(mWh) = (SAEH * 256 + SAEL) * \frac{1.2 * SCALE * (R_{B1} + R_{B2})}{R_S * R_{B2}}$$

where R_{B1}, R_{B2}, and R_S are resistor values in ohms, as shown in Figure 1. SCALE is the selected scale from Table 2.

6. **Compensated Available Capacity (CACT)**

CACT counts similarly to NAC, but contains the available capacity compensated for discharge rate and temperature.

Charge Counting

Charge activity is detected based on a positive voltage on the SR input. If charge activity is detected, the bq2014H increments NAC at a rate proportional to V_{SR} and, if enabled, activates the LED display.

The bq2014H counts charge activity when the voltage at the SR input (V_{SRO}) exceeds the minimum charge threshold (V_{SRQ}). A valid charge is detected when NAC has been updated twice without discharging or reaching the digital magnitude filter time-out. Once a valid charge is detected, charge counting continues until V_{SR}, including offset, falls below V_{SRQ}.

Discharge Counting

Discharge activity is indicated by a negative voltage on the SR input. All discharge counts where V_{SRO} is less than the minimum discharge threshold (V_{SRD}) cause the NAC register to decrement and the DCR to increment.

Self-Discharge Counting

The bq2014H continuously decrements NAC and increments DCR for self-discharge on the basis of time and temperature.

Charge/Discharge Current

The bq2014H current-scale registers, VSRH and VSRL, can be used to determine the battery charge or discharge current. See the Current Scale Register description for details.

Count Compensations

Charge Compensation

Two charge efficiency compensation factors are used for trickle and fast charge. Trickle charge is defined as a rate of charge < C/3. The compensation defaults to the fast-charge factor until the actual charge rate is determined.

Temperature adapts the charge rate compensation factors over two ranges between nominal and hot temperatures. The compensation factors are shown below.

Charge Temperature	Trickle-Charge Compensation	Fast-Charge Compensation
< 40°C	0.81	0.94
> 40°C	0.75	0.88

Compensated Available Capacity

NAC is adjusted for rate of discharge and temperature to derive the CACD and CACT values.

Corrections for the rate of discharge are made by adjusting an internal discharge compensation factor. The discharge factor is based on the discharge rate. This compensation is applied to NAC to derive the value in the CACD register.

The compensation factors during discharge are:

Approximate Discharge Rate	Rate Efficiency Factor
< 2C	100%
> 2C	95%

Temperature compensation during discharge also takes place. At lower temperatures, the compensation factor increases by 0.05 for each 10°C temperature range below 10°C. This compensation is applied to CACD to derive the value in the CACT register. The temperature compensation factor follows the equation

$$\text{Temperature Efficiency Factor} = 1.00 - (0.05 * N)$$

where N = number of 10°C steps below 10°C.

For example,

T > 10°C: Nominal compensation, N = 0

0°C < T < 10°C: N = 1 (temperature efficiency = 95%)

-10°C < T < 0°C: N = 2 (temperature efficiency = 90%)

-20°C < T < -10°C: N = 3 (temperature efficiency = 85%)

-20°C < T < -30°C: N = 4 (temperature efficiency = 80%)

Self-Discharge Compensation

The self-discharge compensation is programmed for a nominal rate of $1/64 * NAC$ per day, $1/47 * NAC$ per day, or disabled. This is the rate for a battery within the 20°C–30°C temperature range (TMPGG = 6x). This rate varies across 8 ranges from <10°C to >70°C, doubling with each higher temperature step (10°C). See Table 3.

Table 3. Self-Discharge Compensation

Temperature Step	Typical Rate	
	PROG5 = Z	PROG5 = L
< 10°C	NAC/256	NAC/188
10–20°C	NAC/128	NAC/94
20–30°C	NAC/64	NAC/47
30–40°C	NAC/32	NAC/23.5
40–50°C	NAC/16	NAC/11.8
50–60°C	NAC/8	NAC/5.88
60–70°C	NAC/4	NAC/2.94
> 70°C	NAC/2	NAC/1.47

Digital Magnitude Filter

The bq2014H has a digital filter to eliminate charge and discharge counting below a set threshold. The threshold for both V_{SRD} and V_{SRQ} is 250µV.

Table 6. bq2014H Current-Sensing Errors

Symbol	Parameter	Typical	Maximum	Units	Notes
INL	Integrated non-linearity error	± 2	± 4	%	Add 0.1% per °C above or below 25°C and 1% per volt above or below 4.25V.
INR	Integrated non-repeatability error	± 1	± 2	%	Measurement repeatability given similar operating conditions.

Error Summary

Capacity Inaccurate

The LMD is susceptible to error on initialization or if no updates occur. On initialization, the LMD value includes the error between the programmed full capacity and the actual capacity. This error is present until a valid discharge occurs and LMD is updated. (See the DCR description.) The other cause of LMD error is battery wear-out. As the battery ages, the measured capacity must be adjusted to account for changes in actual battery capacity.

A Capacity Inaccurate counter (CPI) is maintained and incremented each time a valid charge occurs (qualified by NAC; see the CPI register description). It is reset whenever LMD is updated from the DCR. The counter does not wrap around but stops counting at 255. The capacity inaccurate flag (CI) is set if LMD has not been updated following 64 valid charges.

Current-Sensing Error

Table 6 shows the non-linearity and non-repeatability errors associated with the bq2014H current sensing.

Table 7 illustrates the current-sensing error as a function of V_{OS}. A digital filter prevents charge and discharge counts to the NAC register when V_{SRO} is between V_{SRQ} and V_{SRD}.

Table 7. V_{OS}-Related Current Sense Error (Current = 1A)

V_{OS} (µV)	Sense Resistor			
	20	50	100	mΩ
50	0.25	0.10	0.05	%
100	0.50	0.20	0.10	%
150	0.75	0.30	0.15	%
180	0.90	0.36	0.18	%

Done Input

A charge-control IC or a microcontroller uses the DONE input to communicate charge status to the bq2014H. When the DONE input is asserted high on charge completion, the bq2014H sets NAC = LMD and VDQ = 1. The DONE input should be maintained high as long as the charge controller or microcontroller keeps the batteries full; otherwise, the pin should be held low.

Communicating with the bq2014H

The bq2014H includes a simple single-pin (HDQ plus return) serial data interface. A host processor uses the interface to access various bq2014H registers. Battery characteristics may be easily monitored by adding a single contact to the battery pack. The open-drain HDQ pin on the bq2014H should be pulled up by the host system, or may be left floating if the serial interface is not used.

The interface uses a command-based protocol, in which the host processor sends a command byte to the bq2014H. The command directs the bq2014H to either store the next eight bits of data received to a register specified by the command byte or output the eight bits of data specified by the command byte. (See Figure 4.)

The communication protocol is asynchronous return-to-one. Command and data bytes consist of a stream of eight bits that have a maximum transmission rate of 5K bits/sec. The least-significant bit of a command or data byte is transmitted first. The protocol is simple enough that it can be implemented by most host processors using either polled or interrupt processing. Data input from the bq2014H may be sampled using the pulse-width capture timers available on some microcontrollers.

If a communication error occurs (e.g., t_{CYCB} > 250µs), the bq2014H should be sent a BREAK to reinitiate the serial interface. A BREAK is detected when the HDQ pin is driven to a logic-low state for a time, t_B or greater. The HDQ pin should then be returned to its normal ready-high logic state for a time, t_{BR}. The bq2014H is now ready to receive a command from the host processor.

The return-to-one data bit frame consists of three distinct sections:

1. The first section is used to start the transmission by either the host or the bq2014H taking the HDQ pin to a logic-low state for a period, $t_{STRH;B}$.
2. The next section is the actual data transmission, where the data should be valid by a period, $t_{DSU;B}$, after the negative edge used to start communication. The data should be held for a period, $t_{DH;DV}$, to allow the host or bq2014H to sample the data bit.
3. The final section is used to stop the transmission by returning the HDQ pin to a logic-high state by at least a period, $t_{SSU;B}$, after the negative edge used to start communication. The final logic-high state should be until a period $t_{CYCH;B}$, to allow time to ensure that the bit transmission was stopped properly. The timings for data and break communication are given in the serial communication timing specification and illustration sections.

Communication with the bq2014H is always performed with the bit transmitted first. Figure 5 shows an example of a communication sequence to read the bq2014H NACH register.

bq2014H Command Code and Registers

The bq2014H status registers are listed in Table 8 and described below. All registers are Read/Write in the bq2014H. **Caution: When writing to bq2014H registers ensure that proper data are written. A write-verify read is recommended.**

Command Code

The bq2014H latches the command code when eight valid command bits have been received by the bq2014H. The command code contains two fields:

- W/$\overline{R}$ bit
- Command address

The W/$\overline{R}$ bit of the command code is used to select whether the received command is for a read or a write function:

The W/$\overline{R}$ values are

Command Code Bits							
7	6	5	4	3	2	1	0
W/$\overline{R}$	-	-	-	-	-	-	-

where W/$\overline{R}$ is

0 The bq2014H outputs the requested register contents specified by the address portion of command code.

1 The following eight bits should be written to the register specified by the address portion of command code.

The lower 7-bit field of the command code contains the address portion of the register to be accessed:

Command Code Bits							
7	6	5	4	3	2	1	0
-	AD6	AD5	AD4	AD3	AD2	AD1	AD0 (LSB)

Primary Status Flags Register (FLGS1)

The FLGS1 register (address = 01h) contains the primary bq2014H flags.

The ***charge status*** flag (CHGS) is asserted when a valid charge rate is detected. Charge rate is deemed valid when $V_{SRO} > V_{SRQ}$. A V_{SRO} of less than V_{SRQ} or discharge activity clears CHGS.

The CHGS values are

FLGS1 Bits							
7	6	5	4	3	2	1	0
CHGS	-	-	-	-	-	-	-

where CHGS is

0 Either discharge activity detected or $V_{SRO} \leq V_{SRQ}$

1 $V_{SRO} > V_{SRQ}$

The ***battery replaced*** flag (BRP) is asserted whenever the bq2014H is reset either by application of V_{CC} or by a serial port command. BRP is reset when either a valid charge action increments NAC to be equal to LMD, or a valid charge action is detected after the EDV1 flag is asserted. BRP = 1 signifies that the device has been reset.

The BRP values are

FLGS1 Bits							
7	6	5	4	3	2	1	0
-	BRP	-	-	-	-	-	-

where BRP is

0 Battery is charged until NAC = LMD or discharged until the EDV1 flag is asserted

1 bq2014H is reset

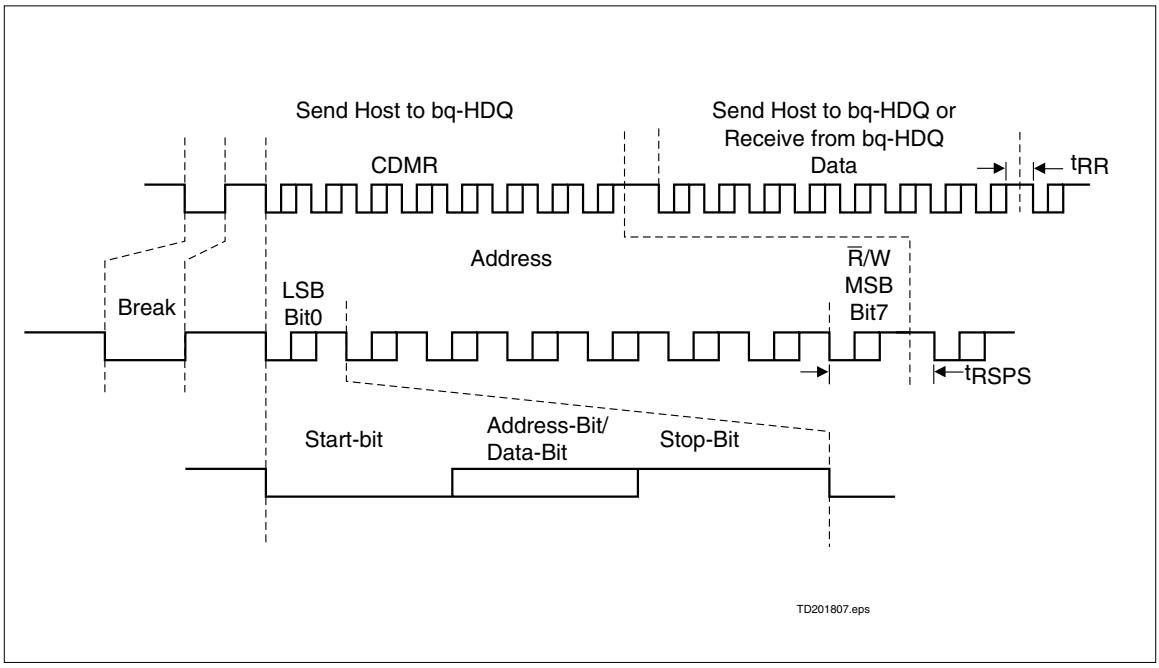

Figure 4. bq2014H Communication Example

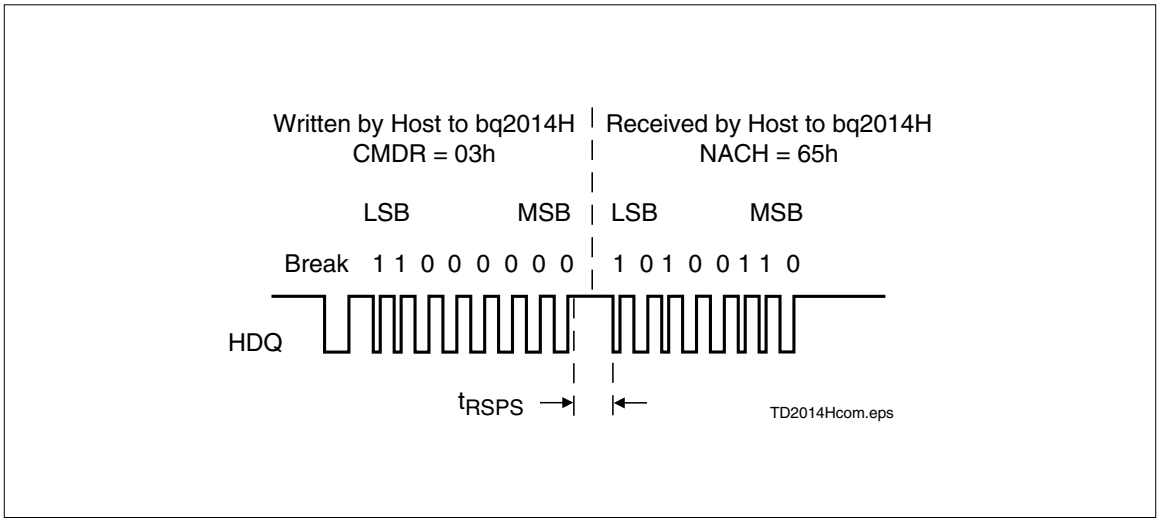

Figure 5. Typical Communication with the bq2014H

Table 8. bq2014H Command and Status Registers

Symbol	Register Name	Loc. (hex)	Read/ Write	Control Field 7(MSB)	6	5	4	3	2	1	0(LSB)
FLGS1	Primary status flags register	01h	R	CHGS	BRP	0	CI	VDQ	1	EDV1	EDVF
TMP	Temperature register	02h	R	TMP3	TMP2	TMP1	TMP0	GG3	GG2	GG1	GG0
NACH	Nominal available capacity high byte register	03h	R/W	NACH7	NACH6	NACH5	NACH4	NACH3	NACH2	NACH1	NACH0
NACL	Nominal available capacity low byte register	17h	R/W	NACL7	NACL6	NACL5	NACL4	NACL3	NACL2	NACL1	NACL0
BATID	Battery identification register	04h	R/W	BATID7	BATID6	BATID5	BATID4	BATID3	BATID2	BATID1	BATID0
LMD	Last measured discharge register	05h	R/W	LMD7	LMD6	LMD5	LMD4	LMD3	LMD2	LMD1	LMD0
FLGS2	Secondary status flags register	06h	R	RSVD	DR2	DR1	DR0	ENINT	VQ	RSVD	OVLD
PPD	Program pin pull-down register	07h	R	RSVD	RSVD	RSVD	PPD5	PPD4	PPD3	PPD2	PPD1
PPU	Program pin pull-up register	08h	R	RSVD	RSVD	RSVD	PPU5	PPU4	PPU3	PPU2	PPU1
CPI	Capacity inaccurate count register	09h	R/W	CPI7	CPI6	CPI5	CPI4	CPI3	CPI2	CPI1	CPI0
VSB	Battery voltage register	0bh	R	VSB7	VSB6	VSB5	VSB4	VSB3	VSB2	VSB1	VSB0
VTS	End-of-discharge threshold select register	0ch	R/W	VTS7	VTS6	VTS5	VTS4	VTS3	VTS2	VTS1	VTS0
CACT	Temperature and discharge rate compensated available capacity	0dh	R/W	CACT7	CACT6	CACT5	CACT4	CACT3	CACT2	CACT1	CACT0
CACD	Discharge rate compensated available capacity	0eh	R/W	CACD7	CACD6	CACD5	CACD4	CACD3	CACD2	CACD1	CACD0
SAEH	Scaled available energy high byte register	0fh	R	SAEH7	SAEH6	SAEH5	SAEH4	SAEH3	SAEH2	SAEH1	SAEH0
SAEL	Scaled available energy low byte register	10h	R	SAEL7	SAEL6	SAEL5	SAEL4	SAEL3	SAEL2	SAEL1	SAEL0
RCAC	Relative CAC	11h	R	-	RCAC6	RCAC5	RCAC4	RCAC3	RCAC2	RCAC1	RCAC0
VSRH	Current scale high	12h	R	VSRH7	VSRH6	VSRH5	VSRH4	VSRH3	VSRH2	VSRH1	VSRH0
VSRL	Current scale low	13h	R	VSRL7	VSRL6	VSRL5	VSRL4	VSRL3	VSRL2	VSRL1	VSRL0
DCR	Discharge register	18h	R/W	DCR7	DCR6	DCR5	DCR4	DCR3	DCR2	DCR1	DCR0
PPFC	Program pin data	1eh	R/W	RSVD	RSVD	RSVD	RSVD	RSVD	RSVD	RSVD	RSVD
INTSS	V_{OS} Interrupt	38h	R/W	RSVD	RSVD	RSVD	RSVD	DCHGI	RSVD	RSVD	CHGI

Notes: RSVD = reserved.
All other registers not documented are reserved.

The ***capacity inaccurate*** flag (CI) is used to warn the user that the battery has been charged a substantial number of times since LMD has been updated. The CI flag is asserted on the 64th charge after the last LMD update or when the bq2014H is reset. The flag is cleared after an LMD update.

The CI values are

FLGS1 Bits							
7	6	5	4	3	2	1	0
-	-	-	CI	-	-	-	-

where CI is

0 When LMD is updated with a valid full discharge

1 After the 64th valid charge action with no LMD updates or the bq2014H is reset

The ***valid discharge*** flag (VDQ) is asserted when the bq2014H is discharged from NAC = 0.94 ∗ LMD. The flag remains set until either LMD is updated or one of three actions that can clear VDQ occurs:

- When NAC has been reduced by more than 6.25% because of self-discharge since VDQ was set.
- A valid charge action is sustained at $V_{SRO} > V_{SRQ}$ for at least 2 NAC updates.
- The EDV1 flag was set at a temperature below 0°C

The VDQ values are

FLGS1 Bits							
7	6	5	4	3	2	1	0
-	-	-	-	VDQ	-	-	-

where VDQ is

0 Self-discharge of more than 6.25% of NAC, valid charge action detected, EDV1 asserted with the temperature less than 0°C, or reset

1 On first discharge after NAC ≥ 0.94 ∗ LMD

The ***first end-of-discharge warning*** flag (EDV1) warns the user that the battery is almost empty. The first segment pin, SEG_1, is modulated at a 4Hz rate if the display is enabled once EDV1 is asserted, which should warn the user that loss of battery power is imminent. The EDV1 flag is latched until a valid charge has been detected. The EDV1 threshold is externally controlled via the VTS register (see Voltage Threshold Register).

The EDV1 values are

FLGS1 Bits							
7	6	5	4	3	2	1	0
-	-	-	-	-	-	EDV1	-

where EDV1 is

0 Valid charge action detected, $V_{SB} \geq V_{TS}$

1 $V_{SB} < V_{TS}$ providing that the discharge rate is < 2C (OVLD not set)

The ***final end-of-discharge warning*** flag (EDVF) flag is used to warn that battery power is at a failure condition. All segment drivers are turned off. The EDVF flag is latched until a valid charge has been detected. The EDVF threshold is set 25mV below the EDV1 threshold.

The EDVF values are

FLGS1 Bits							
7	6	5	4	3	2	1	0
-	-	-	-	-	-	-	EDVF

where EDVF is

0 Valid charge action detected, $V_{SB} \geq (V_{TS} - 25mV)$

1 $V_{SB} < (V_{TS} - 25mV)$ providing the discharge rate is < 2C

Temperature Register (TMP)

The TMP register (address=02h) contains the battery temperature.

The bq2014H contains an internal temperature sensor. The temperature is used to set charge and discharge efficiency factors as well as to adjust the self-discharge coefficient. The temperature register contents may be translated as shown in Table 9.

TMP Temperature Bits							
7	6	5	4	3	2	1	0
TMP3	TMP2	TMP1	TMP0	-	-	-	-

The bq2014H calculates the gas gauge bits, GG3-GG0 as a function of CACT and LMD. The results of the calculation give available capacity in $1/16$ increments from 0 to $15/16$.

TMP Gas Gauge Bits							
7	6	5	4	3	2	1	0
-	-	-	-	GG3	GG2	GG1	GG0

Table 9. Temperature Register

TMP3	TMP2	TMP1	TMP0	Temperature
0	0	0	0	T < -30°C
0	0	0	1	-30°C < T < -20°C
0	0	1	0	-20°C < T < -10°C
0	0	1	1	-10°C < T < 0°C
0	1	0	0	0°C < T < 10°C
0	1	0	1	10°C < T < 20°C
0	1	1	0	20°C < T < 30°C
0	1	1	1	30°C < T < 40°C
1	0	0	0	40°C < T < 50°C
1	0	0	1	50°C < T < 60°C
1	0	1	0	60°C < T < 70°C
1	0	1	1	70°C < T < 80°C
1	1	0	0	T > 80°C

Nominal Available Capacity Registers (NACH/NACL)

The NACH high-byte register (address=03h) and the NACL low-byte register (address=17h) are the main gas gauging registers for the bq2014H. The NAC registers are incremented during charge actions and decremented during discharge and self-discharge actions. NACH and NACL are set to 0 during a bq2014H reset.

Writing to the NAC registers affects the available charge counts and, therefore, affects the bq2014H gas gauge operation. Do not write the NAC registers to a value greater than LMD.

Battery Identification Register (BATID)

The BATID register (address=04h) is available for use by the system to determine the type of battery pack. The BATID contents are retained as long as V_{RBI} is greater than 2V. The contents of BATID have no effect on the operation of the bq2014H. There is no default setting for this register.

Last Measured Discharge Register (LMD)

LMD is the register (address=05h) that the bq2014H uses as a measured full reference. The bq2014H adjusts LMD based on the measured discharge capacity of the battery from full to empty. In this way the bq2014H updates the capacity of the battery. LMD is set to PFC during a bq2014H reset.

LMD is set to DCR upon the first valid charge after EDV is set if VDQ is set.

If DCR < 0.94 LMD, then LMD is set to 0.94 ∗ LMD.

Secondary Status Flags Register (FLGS2)

The FLGS2 register (address=06h) contains the secondary bq2014H flags.

Bit 7 and bit 1 of FLGS2 are reserved. Do not write to these bits.

The ***discharge rate*** flags, DR2–0, are bits 6–4.

FLGS2 Bits							
7	6	5	4	3	2	1	0
-	DR2	DR1	DR0	-	-	-	

They are used to determine the current discharge regime as follows:

DR2	DR1	DR0	Discharge Rate
0	0	0	DRATE < 0.5C
0	0	1	0.5C ≤ DRATE < 2C
0	1	0	2C < DRATE

The ***enable interrupt*** flag (ENINT) is a test bit used to determine V_{SR} activity sensed by the bq2014H. The state of this bit will vary and should be ignored by the system.

FLGS2 Bits							
7	6	5	4	3	2	1	0
-	-	-	-	ENINT	-	-	

The ***valid charge*** flag (VQ), bit 2 of FLGS2, is used to indicate whether the bq2014H recognizes a valid charge condition. This bit is reset on the first discharge after NAC = LMD.

The VQ values are

FLGS2 Bits							
7	6	5	4	3	2	1	0
-	-	-	-	-	VQ	-	

where VQ is

0 Valid charge action not detected between a discharge from NAC = LMD and EDV1

1 Valid charge action detected

The ***overload*** flag (OVLD) is asserted when a discharge rate in excess of 2C is detected. OVLD remains asserted as long as the condition persists and is cleared 0.5 seconds after the rate drops below 2C. The overload condition is used to stop sampling of the battery terminal characteristics for end-of-discharge determination.

FLGS2 Bits							
7	6	5	4	3	2	1	0
-	-	-	-	-	-	-	OVLD

Program Pin Pull-Down Register (PPD)

The PPD register (address=07h) contains some of the programming pin information for the bq2014H. The segment drivers, $SEG_{1–5}$, have a corresponding PPD register location, $PPD_{1–5}$. A given location is set if a pull-down resistor has been detected on its corresponding segment driver. For example, if SEG_1 and SEG_4 have pull-down resistors, the contents of PPD are xxx01001.

Program Pin Pull-Up Register (PPU)

The PPU register (address=08h) contains the rest of the programming pin information for the bq2014H. The segment drivers, $SEG_{1–5}$, have a corresponding PPU register location, $PPU_{1–5}$. A given location is set if a pull-up resistor has been detected on its corresponding segment driver. For example, if SEG_3 and SEG_5 have pull-up resistors, the contents of PPU are xxx10100.

PPD/PPU Bits							
7	6	5	4	3	2	1	0
RSVD	RSVD	RSVD	PPU_5	PPU_4	PPU_3	PPU_2	PPU_1
RSVD	RSVD	RSVD	PPD_5	PPD_4	PPD_3	PPD_2	PPD_1

Capacity Inaccurate Count Register (CPI)

The CPI register (address=09h) is used to indicate the number of times a battery has been charged without an LMD update. Because the capacity of a rechargeable battery varies with age and operating conditions, the bq2014H adapts to the changing capacity over time. A complete discharge from full (NAC ≥ 0.94 ∗ LMD) to empty (EDV1=1) is required to perform an LMD update assuming there have been no intervening valid charges, the temperature is greater than or equal to 0°C, and there has been no more than a 6% self-discharge reduction.

The CPI register is incremented every time a valid charge is detected. When NAC ≥ 0.94 ∗ LMD, however, the CPI register increments on the first valid charge; CPI does not increment again for a valid charge until NAC < 0.94 ∗ LMD. This prevents continuous trickle charging from incrementing CPI if self-discharge decrements NAC. The CPI register increments to 255 without rolling over. When the contents of CPI are incremented to 64, the capacity inaccurate flag, CI, is asserted in the FLGS1 register. The CPI register is reset whenever an update of the LMD register is performed, and the CI flag is also cleared.

Battery Voltage Register (VSB)

The battery voltage register is used to read the single-cell battery voltage on the SB pin. The VSB register (address = 0Bh) is updated approximately once per second with the present value of the battery voltage.
V_{SB} = 1.2V ∗ (VSB/256).

VSB Register Bits							
7	6	5	4	3	2	1	0
VSB7	VSB6	VSB5	VSB4	VSB3	VSB2	VSB1	VSB0

Voltage Threshold Register (VTS)

The end-of-discharge threshold voltages (EDV1 and EDVF) can be set using the VTS register (address = 0Ch). The VTS register sets the EDV1 trip point. EDVF is set 25mV below EDV1. The default value in the VTS register is A2h, representing EDV1 = 0.76V and EDVF = 0.735V. EDV1 = 1.2V ∗ (VTS/256).

VTS Register Bits							
7	6	5	4	3	2	1	0
VTS7	VTS6	VTS5	VTS4	VTS3	VTS2	VTS1	VTS0

Compensated Available Charge Registers (CACT/CACD)

The CACD register (address = 0Eh) contains the NAC value compensated for discharge rate. This is a monotonicly decreasing value during discharge. If the discharge rate is > 2C then this value is lower than NAC. CACD is updated only when the discharge rate compensated NAC value is a lower value than CACD during discharge. During charge, CACD is continuously updated with the NAC value.

The CACT register (address = 0Dh) contains the CACD value compensated for temperature. CACT will contain a value lower than CACD when the battery temperature is below 10°C. The CACT value is also used in calculating the LED display pattern.

Scaled Available Energy Registers (SAEH/SAEL)

The SAEH high-byte register (address = 0Fh) and the SAEL low-byte register (address = 10h) are used to scale battery voltage and CACT to a value that can be translated to watt-hours remaining under the present conditions.

Relative CAC Register (RCAC)

The RCAC register (address = 11h) provides the relative battery state-of-charge by dividing CACT by LMD.

RCAC varies from 0 to 64h representing relative state-of-charge from 0 to 100%.

Current Scale Register (VSRH/VSRL)

The VSRH register (address = 12h) and the VSRL register (address = 13h) report the average signal across the SR and V_{SS} pins. The bq2050H updates this register pair every 22.5s. V_{SRH} (high-byte) and V_{SRL} (low-byte) form a 16-bit signed integer value representing the average current during this time. The battery pack current can be calculated from:

$$|I(mA)| = (V_{SRH} * 256 + V_{SRL})/(8 * R_S)$$

where:

R_S = sense resistor value in Ω.
V_{SRH} = high-byte value of battery current
V_{SRL} = low-byte value of battery current

The bq2014H indicates an average discharge current with a "1" in the MSB position of the VSRH register. To calculate discharge current, use the 2's complement if the concatenated register contents in the above equation.

Discharge Count Register (DCR)

The DCR register (address = 18h) stores the high-byte of the discharge count. DCR is reset to zero at the start of a valid discharge cycle and can count to a maximum of FFh. DCR will not increment if EDV1 = 1 and will not roll over from FFh.

Program Pin Full Count (PPFC)

The PPFC register contains information concerning the program pin configuration. This information is used to determine the data integrity of the bq2014H. **The only approved user application for this register is to write a zero to this register as part of a reset request.**

The recommended reset method for the bq2014H is

- Write PPFC to zero
- Write LMD to zero

After these operations, a software reset will occur.

Resetting the bq2014H sets the following:

- LMD = PFC
- CPI, VDQ, RCAC, NACH/L, CACH/L, SAEH/L, NMCV = 0
- CI and BRP = 1

Voltage Offset (V_{OS}) Interrupt (INTSS)

The INTSS register (address = 38h) is useful during intial characterization of bq2014H designs. When the bq2014H counts a charge pulse, CHGI (bit 0) will be set to 1. When the bq2014H counts a discharge pulse, DCHGI (bit 3) will be set to 1. All other locations in the INTSS register are reserved.

Display

The bq2014H can directly display capacity information using low-power LEDs. If LEDs are used, the program pins should be resistively tied to V_{CC} or V_{SS} for a program high or program low, respectively.

The bq2014H displays the battery charge state in relative mode. In relative mode, the battery charge is represented as a percentage of the LMD. Each LED segment represents 20% of the LMD.

The capacity display is also adjusted for the present battery temperature and discharge rate. The temperature adjustment reflects the available capacity at a given temperature but does not affect the NAC register. The temperature adjustments are detailed in the CACT and CACD register descriptions.

When $\overline{DISP}$ is tied to V_{CC}, the SEG_{1-5} outputs are inactive. When $\overline{DISP}$ is left floating, the display becomes active whenever the bq2014H detects a charge in progress $V_{SRO} > V_{SRQ}$. When pulled low, the segment outputs become active for a period of four seconds, ± 0.5 seconds.

The segment outputs are modulated as two banks, with segments 1, 3, and 5 alternating with segments 2 and 4. The segment outputs are modulated at approximately 100Hz with each segment bank active for 30% of the period.

SEG_1 blinks at a 4Hz rate whenever V_{SB} has been detected to be below V_{EDV1} (EDV1 = 1), indicating a low-battery condition. V_{SB} below V_{EDVF} (EDVF = 1) disables the display output.

Microregulator

A micropower source for the bq2014H can be inexpensively built using a FET and an external resistor. (See Figure 1.)

Absolute Maximum Ratings

Symbol	Parameter	Minimum	Maximum	Unit	Notes
V_{CC}	Relative to V_{SS}	-0.3	+7.0	V	
All other pins	Relative to V_{SS}	-0.3	+7.0	V	
REF	Relative to V_{SS}	-0.3	+8.5	V	Current limited by R1 (see Figure 1)
V_{SR}	Relative to V_{SS}	-0.3	Vcc+0.7	V	100kΩ series resistor should be used to protect SR in case of a shorted battery.
T_{OPR}	Operating temperature	0	+70	°C	Commercial

Note: Permanent device damage may occur if **Absolute Maximum Ratings** are exceeded. Functional operation should be limited to the Recommended DC Operating Conditions detailed in this data sheet. Exposure to conditions beyond the operational limits for extended periods of time may affect device reliability.

DC Voltage Thresholds ($T_A = T_{OPR}$; V = 3.0 to 6.5V)

Symbol	Parameter	Minimum	Typical	Maximum	Unit	Notes
V_{EDV1}	First empty warning	0.73	0.76	0.79	V	SB, default
V_{EDVF}	Final empty warning	V_{EDV1} - 0.035	V_{EDV1} - 0.025	V_{EDV1} - 0.015	V	SB, default
V_{SRO}	SR sense range	-300	-	+500	mV	SR, $V_{SR} + V_{OS}$
V_{SRQ}	Valid charge	250	-	-	µV	$V_{SR} + V_{OS}$ (see note)
V_{SRD}	Valid discharge	-	-	-250	µV	$V_{SR} + V_{OS}$ (see note)

Note: V_{OS} is affected by PC board layout. Proper layout guidelines should be followed for optimal performance. See “LayoutConsiderations.”

DC Electrical Characteristics ($T_A = T_{OPR}$)

Symbol	Parameter	Minimum	Typical	Maximum	Unit	Notes
V_{CC}	Supply voltage	3.0	4.25	6.5	V	V_{CC} excursion from < 2.0V to ≥ 3.0V initializes the unit.
V_{OS}	Offset referred to V_{SR}	-	±50	±150	µV	$\overline{DISP}$ = VCC
V_{REF}	Reference at 25°C	5.7	6.0	6.3	V	I_{REF} = 5µA
	Reference at -40°C to +85°C	4.5	-	7.5	V	I_{REF} = 5µA
R_{REF}	Reference input impedance	2.0	5.0	-	MΩ	V_{REF} = 3V
I_{CC}	Normal operation	-	90	135	µA	V_{CC} = 3.0V, HDQ = 0
		-	120	180	µA	V_{CC} = 4.25V, HDQ = 0
		-	170	250	µA	V_{CC} = 6.5V, HDQ = 0
V_{SB}	Battery input	0	-	V_{CC}	V	
R_{SBmax}	SB input impedance	10	-	-	MΩ	0 < V_{SB} < V_{CC}
I_{DISP}	$\overline{DISP}$ input leakage	-	-	5	µA	V_{DISP} = V_{SS}
I_{LCOM}	LCOM input leakage	-0.2	-	0.2	µA	$\overline{DISP}$ = V_{CC}
I_{RBI}	RBI data retention current	-	-	100	nA	V_{RBI} > V_{CC} < 3V
R_{HDQ}	Internal pulldown	500	-	-	KΩ	
R_{SR}	SR input impedance	10	-	-	MΩ	-200mV < V_{SR} < V_{CC}
V_{IHPFC}	Logic input high	V_{CC} - 0.2	-	-	V	$PROG_{1–5}$
V_{ILPFC}	Logic input low	-	-	V_{SS} + 0.2	V	$PROG_{1–5}$
V_{IZPFC}	Logic input Z	float	-	float	V	$PROG_{1–5}$
V_{OLSL}	SEG output low, low V_{CC}	-	0.1	-	V	V_{CC} = 3V, I_{OLS} ≤ 1.75mA SEG_1–SEG_5
V_{OLSH}	SEG output low, high V_{CC}	-	0.4	-	V	V_{CC} = 6.5V, I_{OLS} ≤ 11.0mA SEG_1–SEG_5
V_{OHML}	LCOM output high, low V_{CC}	V_{CC} - 0.3	-	-	V	V_{CC} = 3V, I_{OHLCOM} = -5.25mA
V_{OHMH}	LCOM output high, high V_{CC}	V_{CC} - 0.6	-	-	V	V_{CC} > 3.5V, I_{OHLCOM} = -33.0mA
I_{OLS}	SEG sink current	11.0	-	-	mA	At V_{OLSH} = 0.4V, V_{CC} = 6.5V
I_{OL}	Open-drain sink current	5.0	-	-	mA	At V_{OL} = V_{SS} + 0.3V, HDQ
V_{OL}	Open-drain output low	-	-	0.3	V	I_{OL} ≤ 5mA, HDQ
V_{IHDQ}	HDQ input high	2.5	-	-	V	HDQ
V_{ILDQ}	HDQ input low	-	-	0.8	V	HDQ
R_{PROG}	Soft pull-up or pull-down resistor value (for programming)	-	-	200	KΩ	$PROG_{1–5}$
R_{FLOAT}	Float state external impedance	-	5	-	MΩ	$PROG_{1–5}$

Note: All voltages relative to V_{SS}.

High-Speed Serial Communication Timing Specification ($T_A = T_{OPR}$)

Symbol	Parameter	Minimum	Typical	Maximum	Unit	Notes
t_{CYCH}	Cycle time, host to bq2014H (write)	190	-	-	µs	See note
t_{CYCB}	Cycle time, bq2014H to host (read)	190	205	250	µs	
t_{STRH}	Start hold, host to bq2014H (write)	5	-	-	ns	
t_{STRB}	Start hold, bq2014H to host (read)	32	-	-	µs	
t_{DSU}	Data setup	-	-	50	µs	
t_{DSUB}	Data setup	-	-	50	µs	
t_{DH}	Data hold	90	-	-	µs	
t_{DV}	Data valid	-	-	80	µs	
t_{SSU}	Stop setup	-	-	145	µs	
t_{SSUB}	Stop setup	-	-	145	µs	
t_{RSPS}	Response time, bq2014H to host	190	-	320	µs	
t_B	Break	190	-	-	µs	
t_{BR}	Break recovery	40	-	-	µs	

Note: The open-drain HDQ pin should be pulled to at least V_{CC} by the host system for proper HDQ operation. HDQ may be left floating if the serial interface is not used.

Break Timing

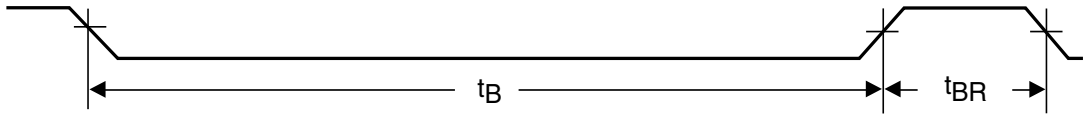

TD201803.eps

Host to bq2014H

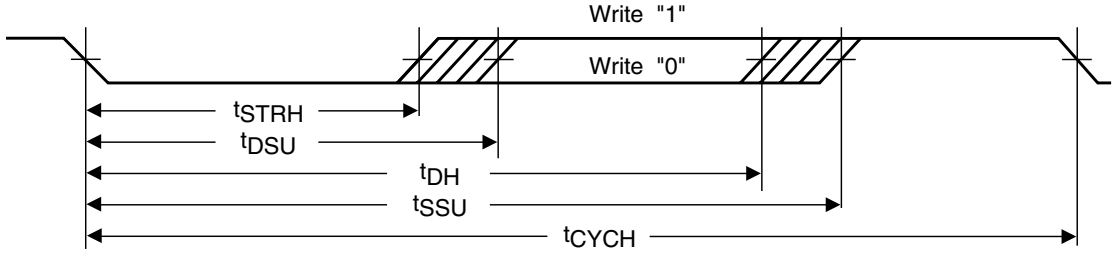

bq2014H to Host

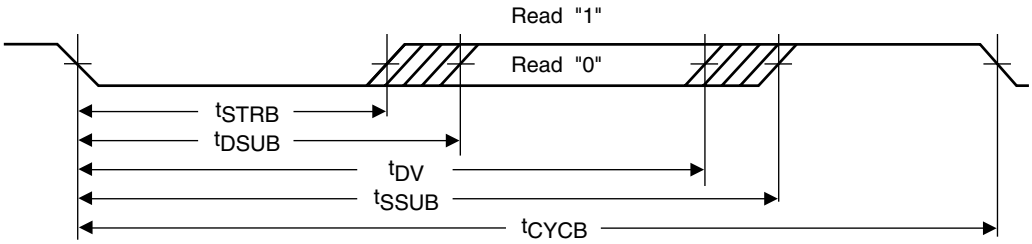

16-Pin SOIC Narrow (SN)

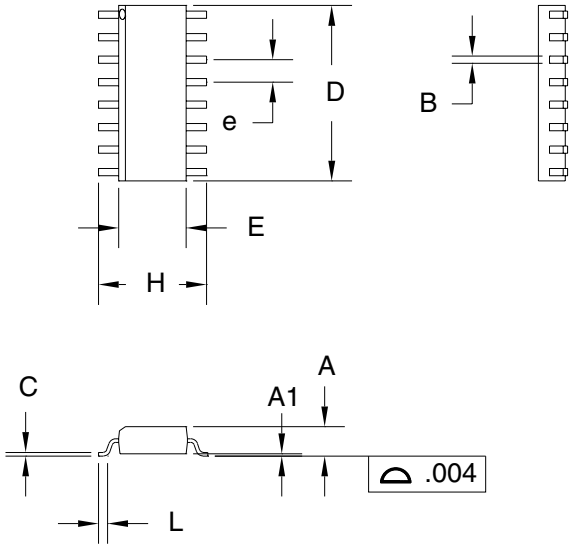

16-Pin SN (0.150" SOIC)

Dimension	Inches		Millimeters	
	Min.	Max.	Min.	Max.
A	0.060	0.070	1.52	1.78
A1	0.004	0.010	0.10	0.25
B	0.013	0.020	0.33	0.51
C	0.007	0.010	0.18	0.25
D	0.385	0.400	9.78	10.16
E	0.150	0.160	3.81	4.06
e	0.045	0.055	1.14	1.40
H	0.225	0.245	5.72	6.22
L	0.015	0.035	0.38	0.89

Ordering Information

bq2014H

Temperature Range:
blank = Commercial (0 to +70°C)

Package Option:
SN = 16-pin narrow SOIC

Device:
bq2014H Gas-Gauge IC

IMPORTANT NOTICE

Texas Instruments and its subsidiaries (TI) reserve the right to make changes to their products or to discontinue any product or service without notice, and advise customers to obtain the latest version of relevant information to verify, before placing orders, that information being relied on is current and complete. All products are sold subject to the terms and conditions of sale supplied at the time of order acknowledgement, including those pertaining to warranty, patent infringement, and limitation of liability.

TI warrants performance of its semiconductor products to the specifications applicable at the time of sale in accordance with TI's standard warranty. Testing and other quality control techniques are utilized to the extent TI deems necessary to support this warranty. Specific testing of all parameters of each device is not necessarily performed, except those mandated by government requirements.

CERTAIN APPLICATIONS USING SEMICONDUCTOR PRODUCTS MAY INVOLVE POTENTIAL RISKS OF DEATH, PERSONAL INJURY, OR SEVERE PROPERTY OR ENVIRONMENTAL DAMAGE ("CRITICAL APPLICATIONS"). TI SEMICONDUCTOR PRODUCTS ARE NOT DESIGNED, AUTHORIZED, OR WARRANTED TO BE SUITABLE FOR USE IN LIFE-SUPPORT DEVICES OR SYSTEMS OR OTHER CRITICAL APPLICATIONS. INCLUSION OF TI PRODUCTS IN SUCH APPLICATIONS IS UNDERSTOOD TO BE FULLY AT THE CUSTOMER'S RISK.

In order to minimize risks associated with the customer's applications, adequate design and operating safeguards must be provided by the customer to minimize inherent or procedural hazards.

TI assumes no liability for applications assistance or customer product design. TI does not warrant or represent that any license, either express or implied, is granted under any patent right, copyright, mask work right, or other intellectual property right of TI covering or relating to any combination, machine, or process in which such semiconductor products or services might be or are used. TI's publication of information regarding any third party's products or services does not constitute TI's approval, warranty or endorsement thereof.

Copyright © 1999, Texas Instruments Incorporated