查询BU2708AX供应商 捷多邦，专业PCB打样工厂，24小时加急出货

Silicon Diffused Power Transistor BU2708AX

GENERAL DESCRIPTION

High voltage, high speed switching npn transistor in a plastic full-pack envelope. Intended for use in horizontal deflection circuits of colour television receivers. Features exceptional tolerance to base drive and collector current load variations, resulting in a low worst-case dissipation. Designed to withstand V_{CES} pulses up to 1700 V.

QUICK REFERENCE DATA

SYMBOL	PARAMETER	CONDITIONS	TYP.	MAX.	UNIT
V_{CESM}	Collector-emitter voltage peak value	V_{BE} = 0 V	-	1700	V
V_{CEO}	Collector-emitter voltage (open base)		-	825	V
I_C	Collector current (DC)		-	8	A
I_{CM}	Collector current peak value		-	15	A
P_{tot}	Total power dissipation	$T_{hs} \leq 25$ ˚C	-	45	W
V_{CEsat}	Collector-emitter saturation voltage	I_C = 4 A; I_B = 1.33 A	-	1.0	V
I_{Csat}	Collector saturation current	f = 16 kHz	4	-	A
t_s	Storage time	I_{Csat} = 4 A; f = 16 kHz	4.8	5.5	µs

PINNING - SOT399

PIN	DESCRIPTION
1	base
2	collector
3	emitter
case	isolated

PIN CONFIGURATION

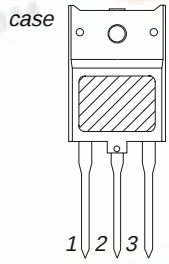

SYMBOL

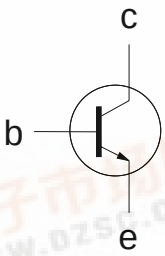

LIMITING VALUES

Limiting values in accordance with the Absolute Maximum Rating System (IEC 134)

SYMBOL	PARAMETER	CONDITIONS	MIN.	MAX.	UNIT
V_{CESM}	Collector-emitter voltage peak value	V_{BE} = 0 V	-	1700	V
V_{CEO}	Collector-emitter voltage (open base)		-	825	V
I_C	Collector current (DC)		-	8	A
I_{CM}	Collector current peak value		-	15	A
I_B	Base current (DC)		-	4	A
I_{BM}	Base current peak value		-	6	A
$-I_{BM}$	Reverse base current peak value [1]		-	5	A
P_{tot}	Total power dissipation	$T_{hs} \leq$ 25 ˚C	-	45	W
T_{stg}	Storage temperature		-65	150	˚C
T_j	Junction temperature		-	150	˚C

ESD LIMITING VALUES

SYMBOL	PARAMETER	CONDITIONS	MIN.	MAX.	UNIT
V_C	Electrostatic discharge capacitor voltage	Human body model (250 pF, 1.5 kΩ)	-	10	kV

1 Turn-off current.

找PDF 维库一下 pdf.dzsc.com

THERMAL RESISTANCES

SYMBOL	PARAMETER	CONDITIONS	TYP.	MAX.	UNIT
$R_{th\ j\text{-}hs}$	Junction to heatsink	without heatsink compound	-	3.7	K/W
$R_{th\ j\text{-}hs}$	Junction to heatsink	with heatsink compound	-	2.8	K/W
$R_{th\ j\text{-}a}$	Junction to ambient	in free air	35	-	K/W

ISOLATION LIMITING VALUE & CHARACTERISTIC

T_{hs} = 25 ˚C unless otherwise specified

SYMBOL	PARAMETER	CONDITIONS	MIN.	TYP.	MAX.	UNIT
V_{isol}	Repetitive peak voltage from all three terminals to external heatsink	R.H. ≤ 65 % ; clean and dustfree	-		2500	V
C_{isol}	Capacitance from T2 to external heatsink	f = 1 MHz	-	22	-	pF

STATIC CHARACTERISTICS

T_{hs} = 25 ˚C unless otherwise specified

SYMBOL	PARAMETER	CONDITIONS	MIN.	TYP.	MAX.	UNIT
I_{CES}	Collector cut-off current [2]	V_{BE} = 0 V; V_{CE} = $V_{CESMmax}$	-	-	1.0	mA
I_{CES}		V_{BE} = 0 V; V_{CE} = $V_{CESMmax}$; T_j = 125 ˚C	-	-	2.0	mA
I_{EBO}	Emitter cut-off current	V_{EB} = 6 V; I_C = 0 A	-	-	70	µA
BV_{EBO}	Emitter-base breakdown voltage	I_B = 1 mA	7.5	13.5	-	V
$V_{CEOsust}$	Collector-emitter sustaining voltage	I_B = 0 A; I_C = 100 mA; L = 25 mH	825	900	-	V
V_{CEsat}	Collector-emitter saturation voltage	I_C = 4 A; I_B = 1.33 A	-	-	1.0	V
V_{BEsat}	Base-emitter saturation voltage	I_C = 4 A; I_B = 1.33 A	0.83	0.91	1.00	V
h_{FE}	DC current gain	I_C = 100 mA; V_{CE} = 5 V	-	21	-	
h_{FE}		I_C = 4 A; V_{CE} = 1 V	3	6	7.3	

DYNAMIC CHARACTERISTICS

T_{hs} = 25 ˚C unless otherwise specified

SYMBOL	PARAMETER	CONDITIONS	TYP.	MAX.	UNIT
	Switching times (line deflection circuit 16 kHz)	I_{Csat} = 4 A; $I_{B(end)}$ = 0.8 A; $-I_{BM}$ = I_{CM}/2; L_B = 6 µH; $-V_{BB}$ = 4 V; L_C = 1 mH; C_{FB} = 12.2 nF			
t_s	Turn-off storage time		4.8	5.5	µs
t_f	Turn-off fall time		0.4	0.52	µs

2 Measured with half sine-wave voltage (curve tracer).

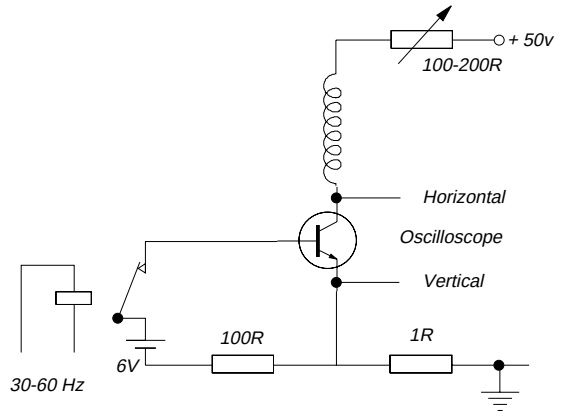

Fig.1. Test circuit for $V_{CEOsust}$.

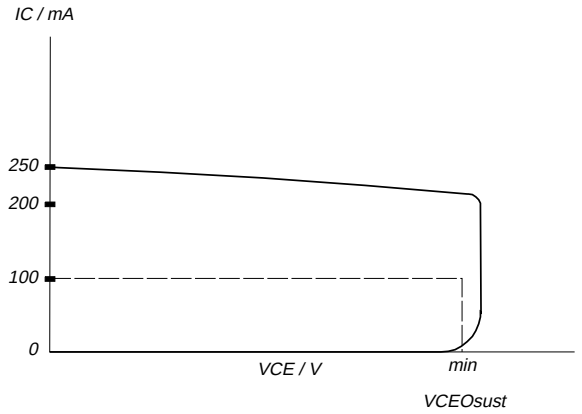

Fig.2. Oscilloscope display for $V_{CEOsust}$.

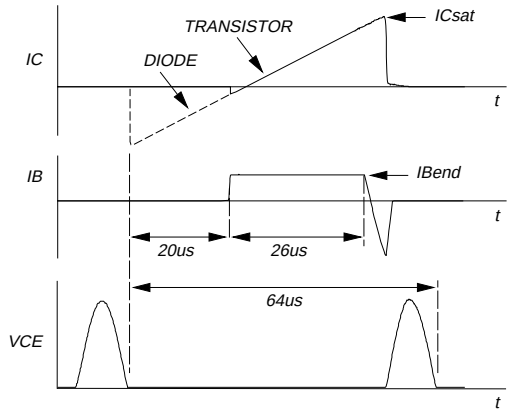

Fig.3. Switching times waveforms.

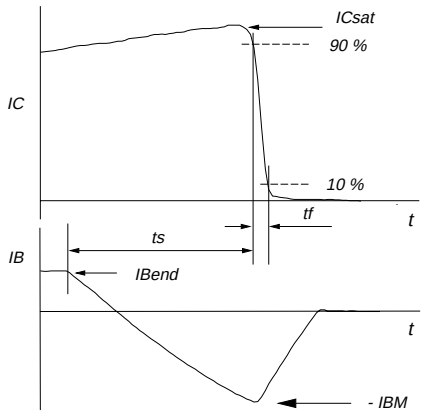

Fig.4. Switching times definitions.

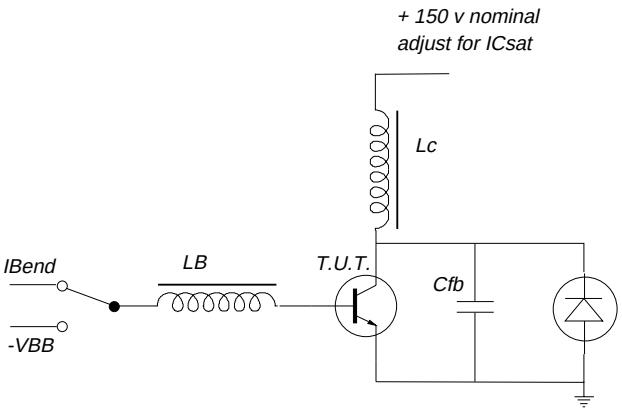

Fig.5. Switching times test circuit.

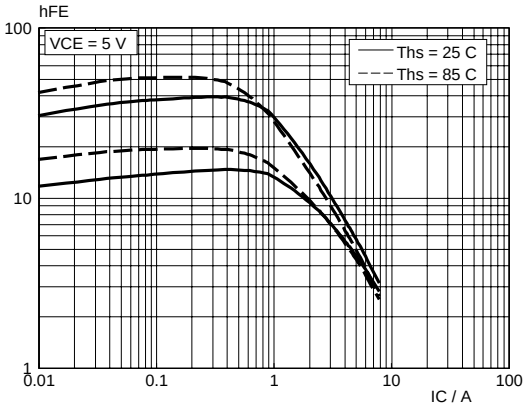

Fig.6. DC current gain. $h_{FE} = f(I_C)$
Parameter T_{hs}
(Low and high gain)

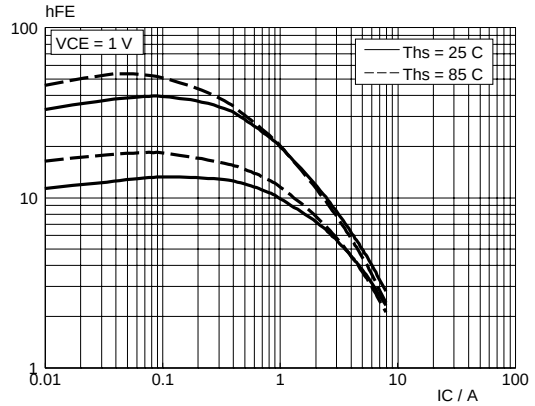

Fig.7. DC current gain. $h_{FE} = f(I_C)$
Parameter T_{hs}
(Low and high gain)

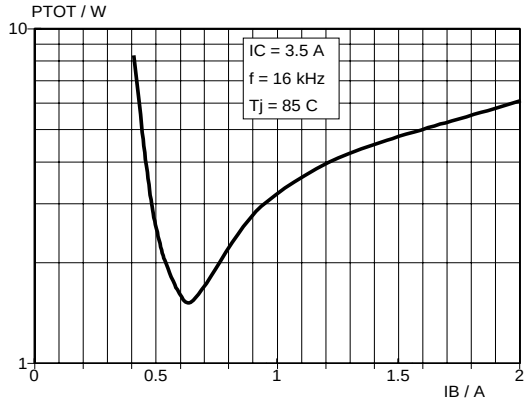

Fig.10. Limit P_{tot}; $T_j = 85^{\circ}C$
$P_{tot} = f(I_{B(end)})$; $I_C = 3.5$ A; f = 16 kHz

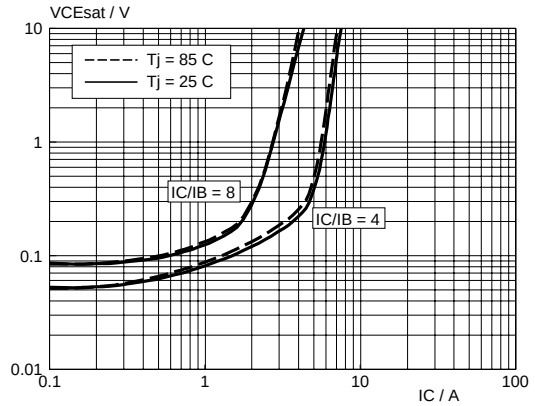

Fig.8. Typical collector-emitter saturation voltage.
$V_{CEsat} = f(I_C)$; parameter I_C/I_B

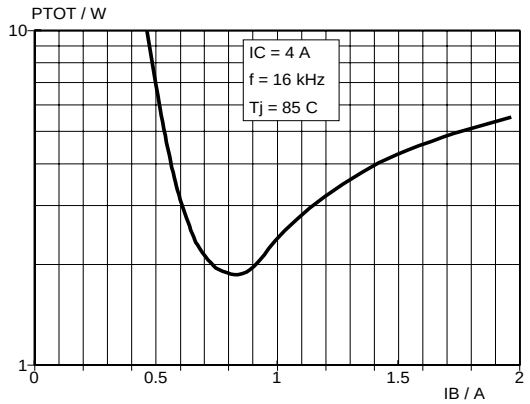

Fig.11. Limit P_{tot}; $T_j = 85^{\circ}C$
$P_{tot} = f(I_{B(end)})$; $I_C = 4.0$ A; f = 16 kHz

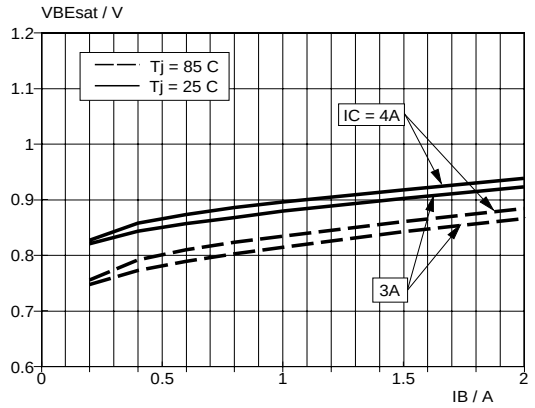

Fig.9. Typical base-emitter saturation voltage.
$V_{BEsat} = f(I_B)$; parameter I_C

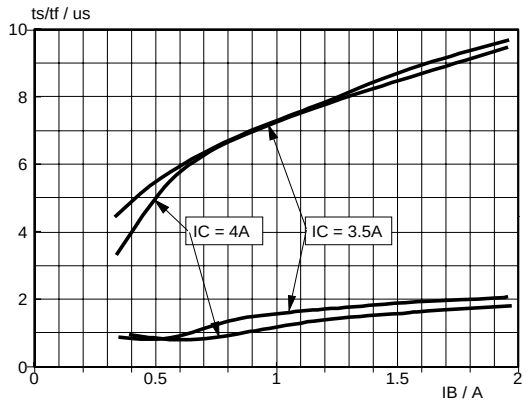

Fig.12. Limit storage and fall time.
$t_s = f(I_B)$; $tf = f(I_B)$; parameter I_C; $T_j = 85^{\circ}C$; f = 16 kHz

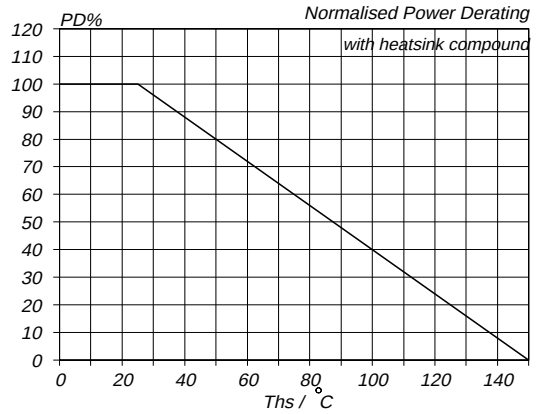

Fig.13. Normalised power dissipation.
PD% = 100·PD/PD 25˚C = f (T_{hs})

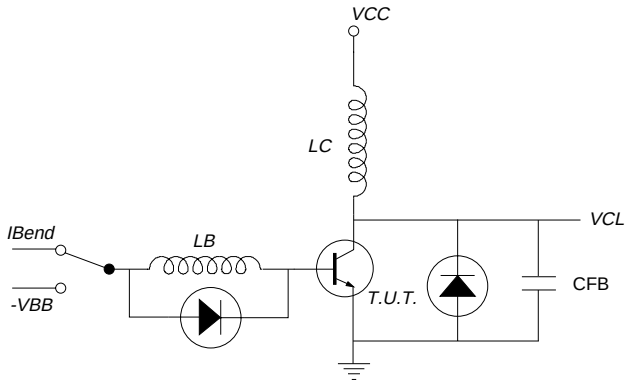

Fig.15. Test Circuit RBSOA. V_{CC} = 150 V;
$-V_{BB}$ = 1 - 4 V;
L_C = 1 mH; V_{CL} = 1500 V; L_B = 1 - 3 µH;
C_{FB} = 1 - 4 nF; $I_{B(end)}$ = 0.8 - 4 A

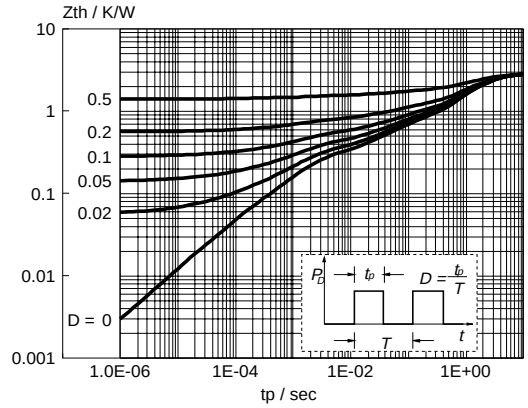

Fig.14. Transient thermal impedance.
$Z_{th\ j\text{-}hs}$ = f(t); parameter D = t_p/T

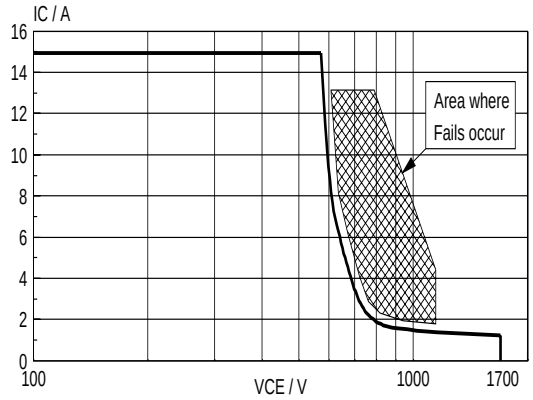

Fig.16. Reverse bias safe operating area. $T_j \leq T_{jmax}$

MECHANICAL DATA

Dimensions in mm

Net Mass: 5.88 g

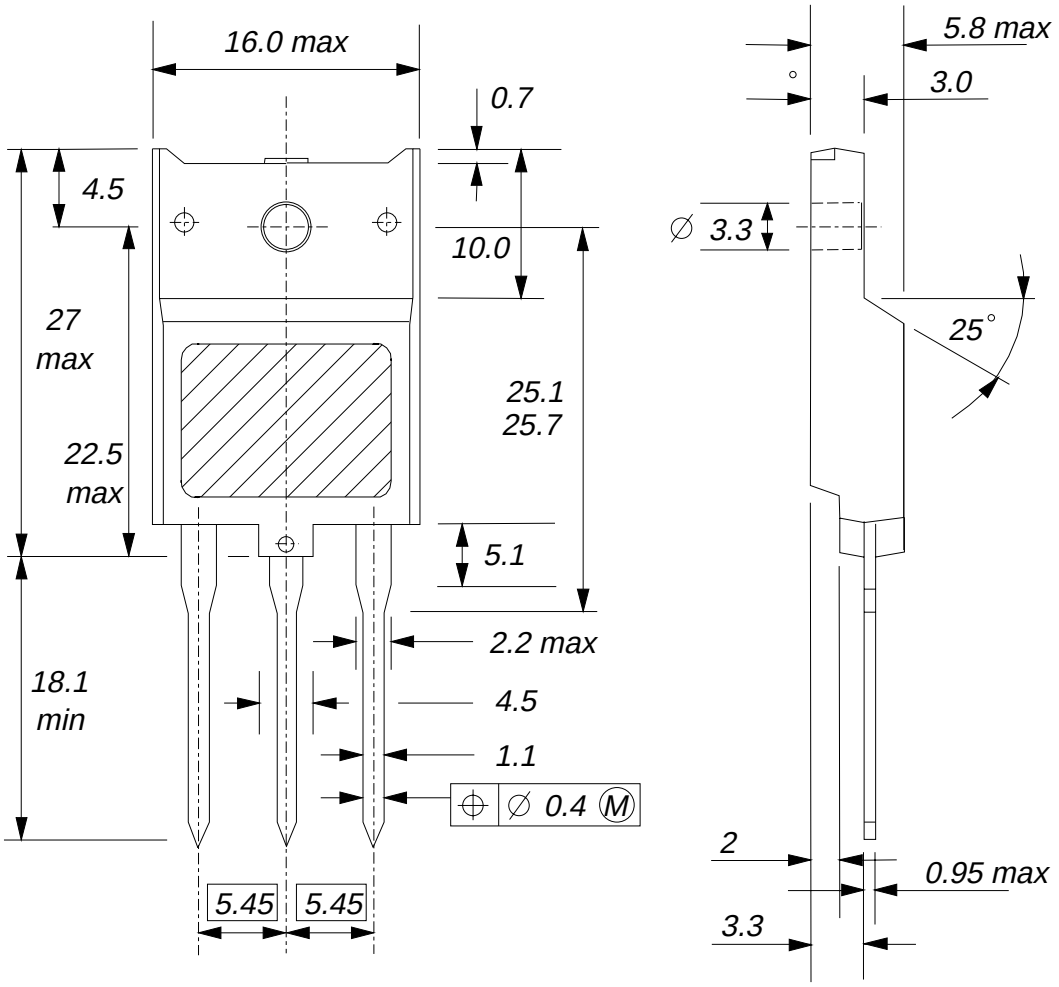

Fig.17. SOT399; The seating plane is electrically isolated from all terminals.

Notes

1. Refer to mounting instructions for F-pack envelopes.
2. Epoxy meets UL94 V0 at 1/8".

DEFINITIONS

Data sheet status	
Objective specification	This data sheet contains target or goal specifications for product development.
Preliminary specification	This data sheet contains preliminary data; supplementary data may be published later.
Product specification	This data sheet contains final product specifications.
Limiting values	
Limiting values are given in accordance with the Absolute Maximum Rating System (IEC 134). Stress above one or more of the limiting values may cause permanent damage to the device. These are stress ratings only and operation of the device at these or at any other conditions above those given in the Characteristics sections of this specification is not implied. Exposure to limiting values for extended periods may affect device reliability.	
Application information	
Where application information is given, it is advisory and does not form part of the specification.	
© **Philips Electronics N.V. 1997**	
All rights are reserved. Reproduction in whole or in part is prohibited without the prior written consent of the copyright owner.	
The information presented in this document does not form part of any quotation or contract, it is believed to be accurate and reliable and may be changed without notice. No liability will be accepted by the publisher for any consequence of its use. Publication thereof does not convey nor imply any license under patent or other industrial or intellectual property rights.	

LIFE SUPPORT APPLICATIONS

These products are not designed for use in life support appliances, devices or systems where malfunction of these products can be reasonably expected to result in personal injury. Philips customers using or selling these products for use in such applications do so at their own risk and agree to fully indemnify Philips for any damages resulting from such improper use or sale.