查询BU8788KN供应商 捷多邦，专业PCB打样工厂，24小时加急出货

03W023A

Melody Sound Source LSI for Cellular Phone
BU8788KN

● Description

BU8788KN is a melody sound source LSI for cellular phones. This LSI generates 32 polyphonic tones simultaneously and is capable of generating user's own sounds by an ADPCM decoder. A total of 207 tones(128tones+47drums +32effect sounds) can be generated. FIFO and Sequencer for playing are incorporated. The sequencer itself can control the timing and play the music by sending the melody data to FIFO.

● Dimension (Unit : mm)

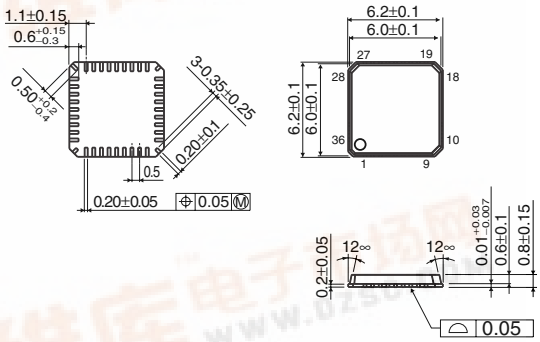

QFN36V

● Features

1) PCM sound source
2) 32 harmonies generator available at the same time
   128 sounds+drum set 47 sounds generation
3) ADPCM decode functions are mounted, and mixing
   with sounds is possible.
4) FIFO buffer and sequencer are used to reduce CPU load
5) PitchBend and vibrato available
6) Integrated stereo sound DAC
7) CPU control through serial and parallel I/F

● Applications

Sound source for cellular phones and portable appliances

● Absolute Maximum Ratings (Ta=25˚C)

Parameter	Symbol	Limits	Unit
Supply voltage range	V_{DD}	–0.3 ~ +4.5	V
Power dissipation	Pd	450 *	mW
Operating temperature range	Topr	–40 ~ +85	˚C
Storage temperature range	Tstg	–50 ~ +125	˚C

*Derating : 4.5mW/˚C for operation above Ta=25˚C

February, 2003

找PDF 维库一下 pdf.dzsc.com

● Recommended Operating Conditions (Ta=25˚C)

Parameter	Symbol	Min.	Typ.	Max.	Unit
Supply voltage range	V_{DD}	2.7	3.0	3.6	V

● Electrical characteristics (Unless otherwise noted; Ta=25˚C, Vcc=3.0V)

Parameter	Symbol	Min.	Typ.	Max.	Unit	Conditions
Clock input frequency	F_{MCLK}	12	—	20	MHz	Scale precision is within 0.2%
ANOUT pin load resistance	Z_{AN}	50	—	—	kΩ	After DC Coupling
VREF pin rise time	T_{RVR}	—	70	100	ms	After releasing RESET when CVREF=1μF
PLL pin rise time	T_{RPLL}	—	—	10	ms	After releasing RESET or STANDBY mode (When C=4.7nF between PLL-FILTER pin and GND)
ANOUT amplitude	V_{MAX}	—	$0.667V_{DD}$	—	V_{P-P}	Theoretical value of dynamic range
Analog operating current consumption	I_{DDA}	—	1	2	mA	Playing mode
Digital operating current consumption	I_{DDD}	—	33	50	mA	Playing mode
Analog static current	I_{stA}	—	—	5	μA	Standby mode
Digital static current	I_{stD}	—	—	5	μA	Standby mode

● Block Diagram

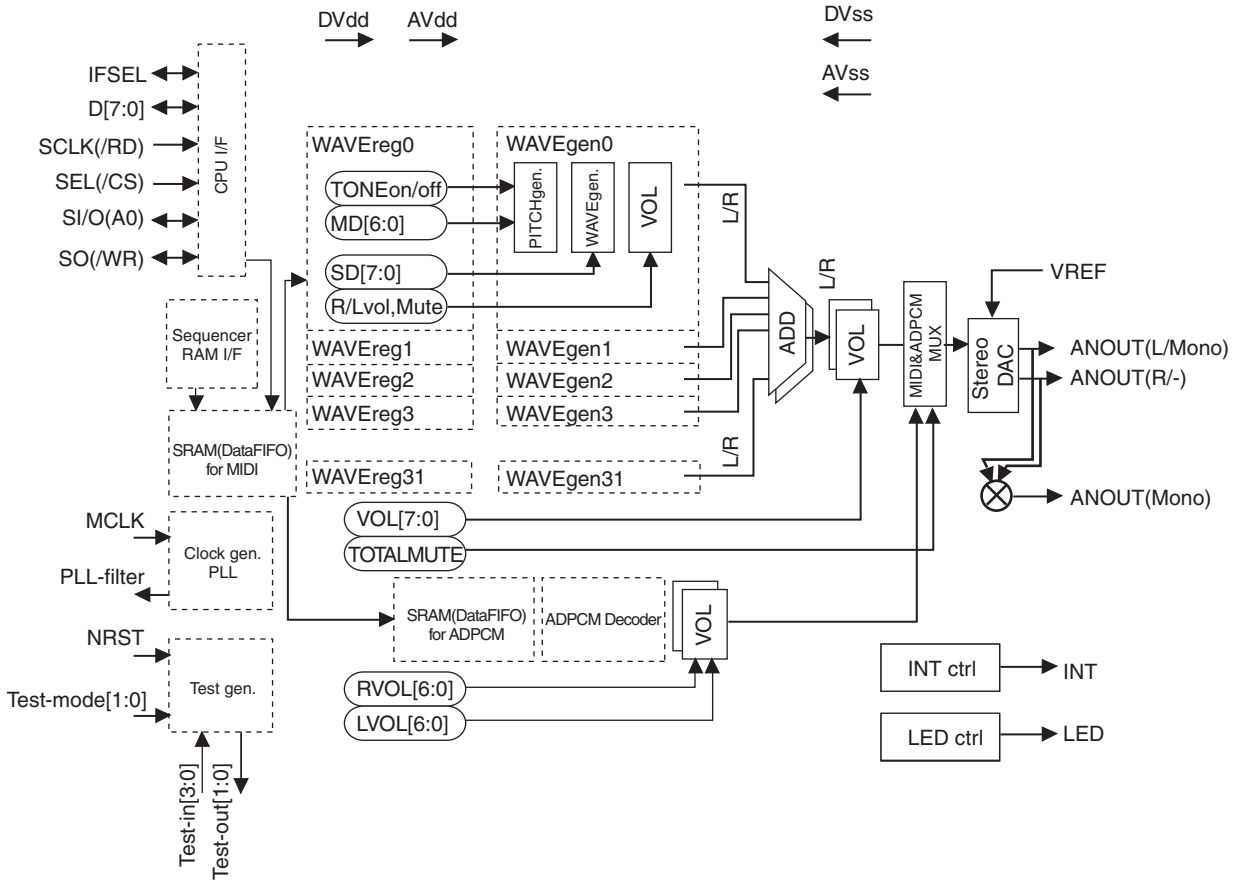

Notes

- No technical content pages of this document may be reproduced in any form or transmitted by any means without prior permission of ROHM CO.,LTD.
- The contents described herein are subject to change without notice. The specifications for the product described in this document are for reference only. Upon actual use, therefore, please request that specifications to be separately delivered.
- Application circuit diagrams and circuit constants contained herein are shown as examples of standard use and operation. Please pay careful attention to the peripheral conditions when designing circuits and deciding upon circuit constants in the set.
- Any data, including, but not limited to application circuit diagrams information, described herein are intended only as illustrations of such devices and not as the specifications for such devices. ROHM CO.,LTD. disclaims any warranty that any use of such devices shall be free from infringement of any third party's intellectual property rights or other proprietary rights, and further, assumes no liability of whatsoever nature in the event of any such infringement, or arising from or connected with or related to the use of such devices.
- Upon the sale of any such devices, other than for buyer's right to use such devices itself, resell or otherwise dispose of the same, no express or implied right or license to practice or commercially exploit any intellectual property rights or other proprietary rights owned or controlled by
- ROHM CO., LTD. is granted to any such buyer.
- Products listed in this document use silicon as a basic material.
  Products listed in this document are no antiradiation design.

The products listed in this document are designed to be used with ordinary electronic equipment or devices (such as audio visual equipment, office-automation equipment, communications devices, electrical appliances and electronic toys).
Should you intend to use these products with equipment or devices which require an extremely high level of reliability and the malfunction of with would directly endanger human life (such as medical instruments, transportation equipment, aerospace machinery, nuclear-reactor controllers, fuel controllers and other safety devices), please be sure to consult with our sales representative in advance.

About Export Control Order in Japan

Products described herein are the objects of controlled goods in Annex 1 (Item 16) of Export Trade Control Order in Japan.
In case of export from Japan, please confirm if it applies to "objective" criteria or an "informed" (by MITI clause) on the basis of "catch all controls for Non-Proliferation of Weapons of Mass Destruction.