BYT200PIV-400

ULTRAFAST POWER RECTIFIER DIODE

MAIN PRODUCT CHARACTERISTICS

$I_{F(AV)}$	2 x100 A
V_{RRM}	400 V
V_F (max)	1.4 V

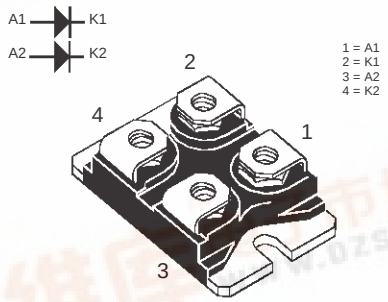

ISOTOP™

FEATURES AND BENEFITS

- LOW CONDUCTION LOSSES
- NEGLIGIBLE SWITCHING LOSSES
- HIGH AVALANCHE CAPABILITY
- ISOLATED PACKAGE :
  2500 V_{DC}
  CAPACITANCE 42pF

DESCRIPTION

High current power rectifier diode suited for Switched Mode Power Supply and high frequency DC to DC converters.

Packaged in ISOTOP, this device is intended for use in a medium voltage high current applications such as **welding equipment and Telecom supplies.**

ABSOLUTE MAXIMUM RATING

Symbol	Parameter		Value	Unit
V_{RRM}	Repetitive peak reverse voltage		400	V
$I_{F(RMS)}$	RMS forward current		150	A
$I_{F(AV)}$	Average forward current	Tc = 80°C δ = 0.5	100	A
I_{FSM}	Surge non repetitive forward current	tp = 10 ms Sinusoidal	600	A
I_{FRM}	Repetitive peak forward current	tp ® 10 µs	800	A
T_{stg}	Storage temperature range		- 40 to + 150	°C
Tj	Maximum junction temperature		150	°C

ISOTOP is a trademark of STMicroelectronics

THERMAL RESISTANCES

Symbol	Parameter		Value	Unit
$R_{th\ (j-c)}$	Junction to case	Per leg	0.55	°C/W
		Total	0.33	
$R_{th\ (c)}$		Coupling	0.1	

STATIC ELECTRICAL CHARACTERISTICS (per diode)

Symbol	Parameter	Tests Conditions		Min.	Typ.	Max.	Unit
I_R *	Reverse leakage current	Tj = 25°C	$V_R = V_{RRM}$			120	µA
		Tj = 100°C			4	12	mA
V_F **	Forward voltage drop	Tj = 25°C	I_F = 100 A			1.6	V
		Tj = 125°C	I_F = 100 A		0.95	1.4	

Pulse test : * tp = 5 ms, duty cycle < 2 %
** tp = 380 µs, duty cycle < 2%

RECOVERY CHARACTERISTICS

Symbol	Parameter	Test Conditions	Min.	Typ.	Max.	Unit
t_{rr}	Reverse recovery time	I_F=0.5A I_R=1A Irr=0.25A I_F=1A dI/dt= -50A/µs Vr=30V		55	100	ns
I_{RM}	Reverse recovery current	dI_F/dt=-200A/µs Tj=125°C V_R=400V I_F=100A			40	A
S factor	Softness factor	dI_F/dt=-200A/µs Tj=125°C V_R=400V I_F=100A		0.25		
t_{fr}	Forward recovery time	I_F=100A dI_F/dt=500A/µs Measured at 1.1 x V_F max. Tj=25°C			500	ns
V_{FP}	Peak forward voltage				12	V

To evaluate the conduction losses use the following equation :

$P = 0.8 \times I_{F(AV)} + 0.00228 \times I_F^2{}_{(RMS)}$

Fig. 1: Average forward power dissipation versus average forward current (per diode).

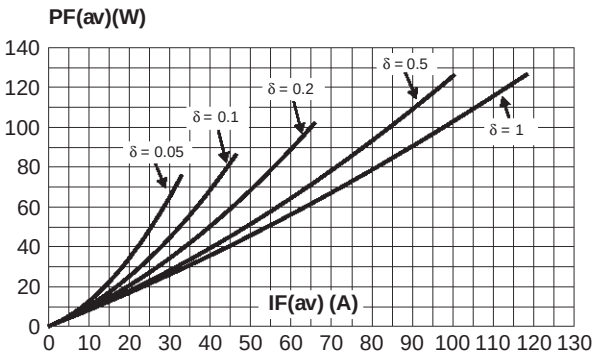

Fig. 2: Peak current versus form factor (per diode).

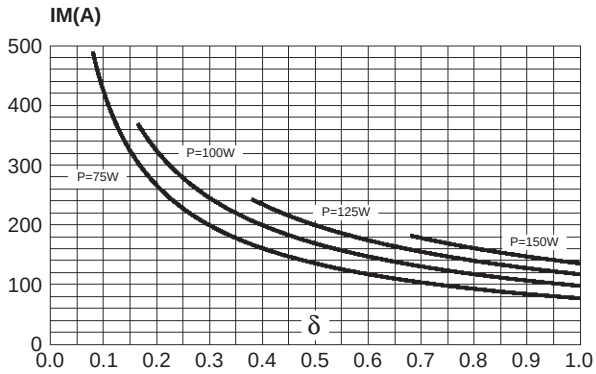

Fig. 3: Average forward current versus ambient temperature (δ = 0.5, per diode).

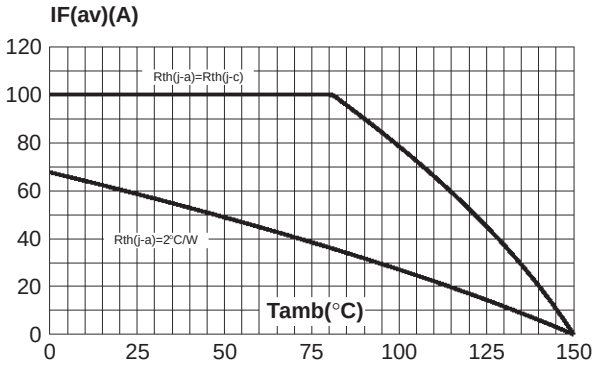

Fig. 4: Non repetitive surge peak forward current versus overload duration (per diode).

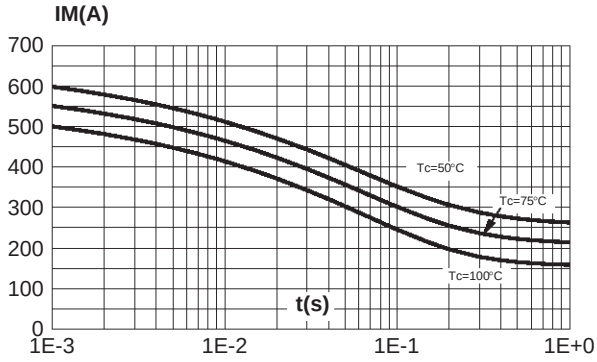

Fig. 5: Relative variation of thermal impedance junction to case versus pulse duration (per diode).

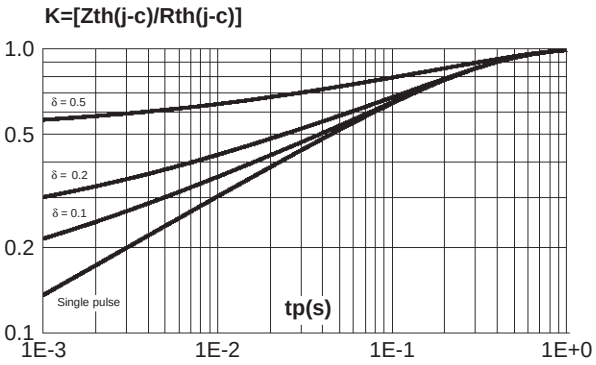

Fig. 6: Forward voltage drop versus forward current (maximum values, per diode).

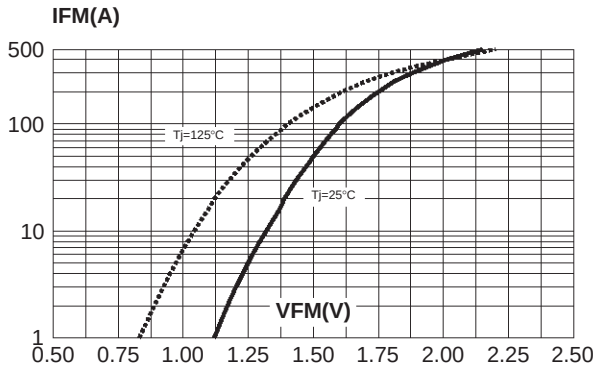

Fig. 7: Junction capacitance versus reverse voltage applied (typical values, per diode).

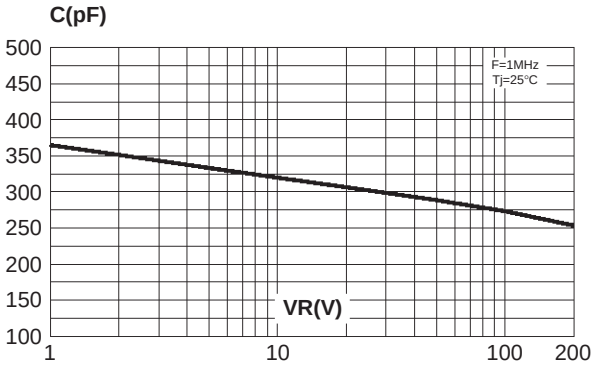

Fig. 8: Recovery charges versus dIF/dt (per diode).

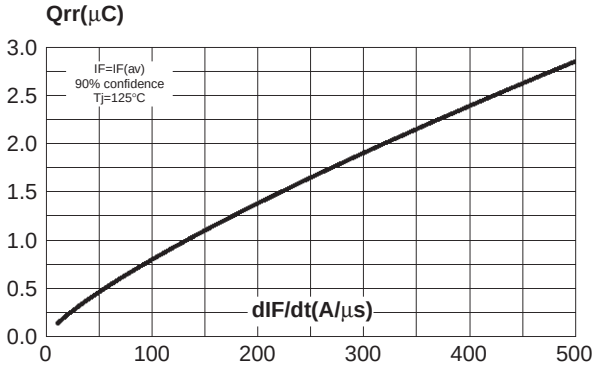

Fig. 9: Recovery current versus dIF/dt (per diode).

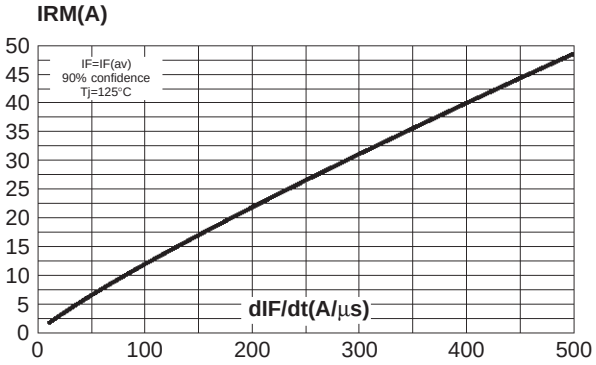

Fig. 10: Transient peak forward voltage versus dIF/dt (per diode).

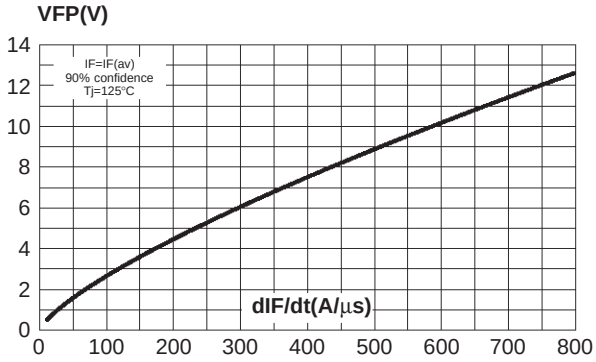

Fig. 11: Dynamic parameters versus junction temperature.

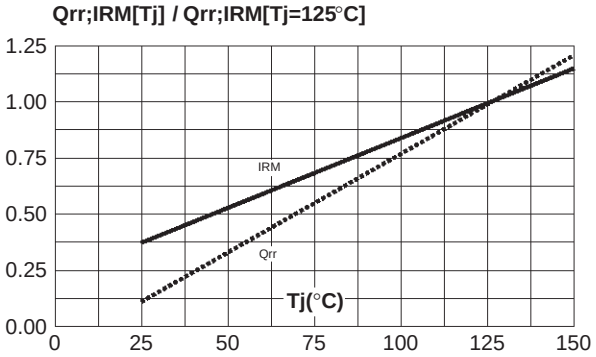

PACKAGE MECHANICAL DATA
ISOTOP

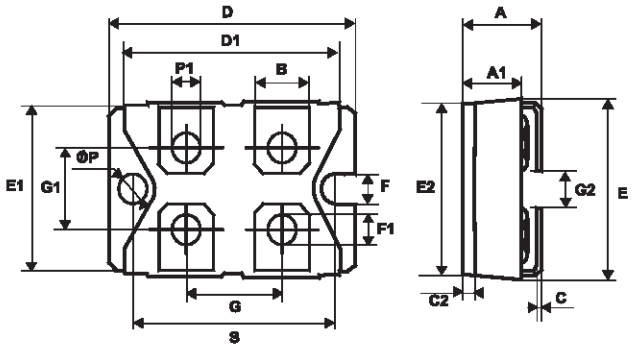

REF.	DIMENSIONS			
	Millimeters		Inches	
	Min.	Max.	Min.	Max.
A	11.80	12.20	0.465	0.480
A1	8.90	9.10	0.350	0.358
B	7.8	8.20	0.307	0.323
C	0.75	0.85	0.030	0.033
C2	1.95	2.05	0.077	0.081
D	37.80	38.20	1.488	1.504
D1	31.50	31.70	1.240	1.248
E	25.15	25.50	0.990	1.004
E1	23.85	24.15	0.939	0.951
E2	24.80 typ.		0.976 typ.	
G	14.90	15.10	0.587	0.594
G1	12.60	12.80	0.496	0.504
G2	3.50	4.30	0.138	0.169
F	4.10	4.30	0.161	0.169
F1	4.60	5.00	0.181	0.197
P	4.00	4.30	0.157	0.69
P1	4.00	4.40	0.157	0.173
S	30.10	30.30	1.185	1.193

- Epoxy meets UL94, V0