查询C393C供应商

DATA SHEET

NEC

BIPOLAR ANALOG INTEGRATED CIRCUIT

μPC393

LOW POWER DUAL COMPARATORS

DESCRIPTION

The μPC393 is a dual comparator which is designed to operate from a single power supply over a wide range of voltage. Operation from split power supplies is also possible and the power supply current drain is very low. Further advantage, the input common-mode voltage includes ground, even though operated from a single power supply voltage.

FEATURES

- Common-mode input voltage range includes V⁻
- Wide supply voltage range
  - 2 V to 32 V (Single)
  - ±1 V to ±16 V (Split)
- Low supply current
- Open collector output

EQUIVALENT CIRCUIT (1/2 Circuit)

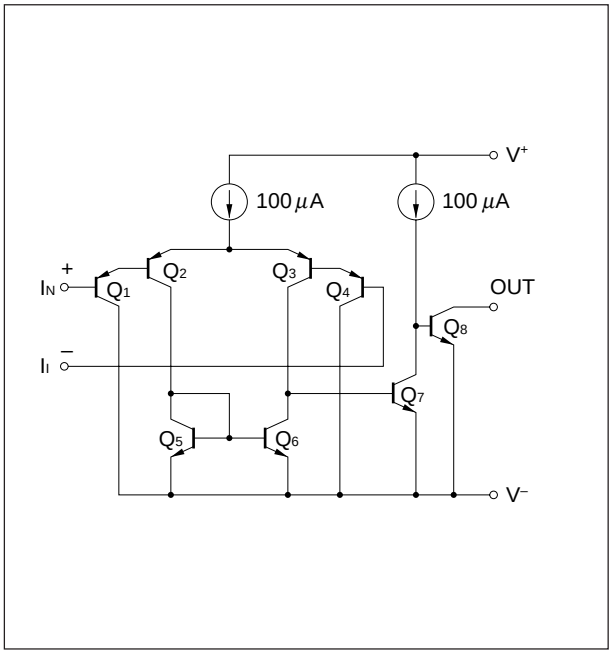

PIN CONFIGURATION (Top View)

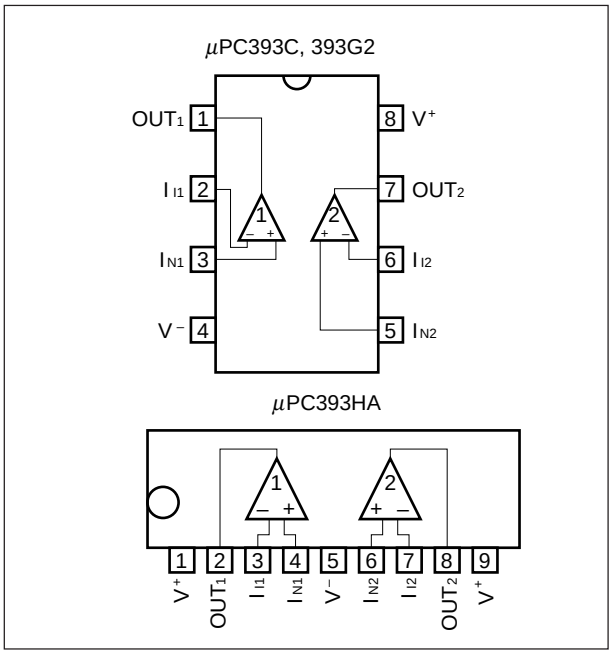

ORDERING INFORAMTION

Part Number	Package
μPC393C	8-pin plastic DIP (300 mil)
μPC393G2	8-pin plastic SOP (225 mil)
μPC393HA	9-pin plastic slim SIP

The information in this document is subject to change without notice.

Document No. G11766EJ3V0DS00 (3rd edition)
(Previous No. IC-1971)
Date Published April 1997 N
Printed in Japan

The mark ★ shows major revised points.

© NEC Corporation 1989

ABSOLUTE MAXIMUM RATINGS (T_A = 25 °C)

Parameter			Symbol	Ratings	Unit
Voltage between V^+ and V^-		**Note 1**	$V^+ - V^-$	–0.3 to +36	V
Differential Input Voltage			V_{ID}	±36	V
Input Voltage		**Note 2**	V_I	V^- –0.3 to V^- +36	V
Output Voltage		**Note 3**	V_O	V^- –0.3 to V^- +36	V
Power Dissipation	C Package	**Note 4**	P_T	350	mW
	G2 Package	**Note 5**		440	mW
	HA Package	**Note 4**		350	mW
Output Short Circuit Duration		**Note 6**		Indefinite	sec
Operating Ambient Temperature			T_A	–20 to +80	°C
Storage Temperature			T_{stg}	–55 to + 125	°C

Notes 1. Reverse connection of supply voltage can cause destruction.

2. The input voltage should be allowed to input without damage or destruction independent of the magnitude of V^+. Either input signal should not be allowed to go negative by more than 0.3 V. The normal operation will establish when any input is within the Common Mode Input Voltage Range of electrical characteristics.

3. This specification is the voltage which should be allowed to supply to the output terminal from external without damage or destruction independent of the magnitude of V^+. Even during the transition period of supply voltage, power on/off etc., this specification should be kept.

4. Thermal derating factor is –5.0 mW/°C when operating ambient temperature is higher than 55 °C.

5. Thermal derating factor is –4.4 mW/°C when operating ambient temperature is higher than 25 °C.

6. Short circuits from the output to V^+ can cause destruction. Pay careful attention to the total power dissipation not to exceed the absolute maximum ratings, Note 4 and Note 5.

RECOMMENDED OPERATING CONDITIONS

Parameter	Symbol	MIN.	TYP.	MAX.	Unit
Supply Voltage (Split)	$V^{\pm}$	±1		±16	V
Supply Voltage (V^- = GND)	V^+	+2		+32	V

ELECTRICAL CHARACTERISTICS (T_A = 25 °C, V^+ = 5 V, V^- = GND)

Parameter	Symbol	Conditions	MIN.	TYP.	MAX.	Unit
Input Offset Voltage	V_{IO}	V_O = 1.4 V, V_{REF} = 1.4 V, R_S = 0 Ω		±2	±5	mV
Input Offset Current	I_{IO}	V_O ≒ 1.4 V		±5	±50	nA
Input Bias Current	I_B	V_O ≒ 1.4 V		25	250	nA
Voltage Gain	A_V	R_L = 15 kΩ		200		V/mV
Supply Current	I_{CC}	R_L = ∞, I_O = 0 A, Both Comparators		0.6	1	mA
Common Mode Input Voltage Range	V_{ICM}		0		V^+–1.5	V
Output Saturation Voltage	V_{OL}	$V_{IN(-)}$ = 1 V, $V_{IN(+)}$ = 0 V, $I_{O\,SINK}$ = 4 mA		0.2	0.4	V
Output Sink Current	$I_{O\,SINK}$	$V_{IN(-)}$ = 1 V, $V_{IN(+)}$ = 0 V, V_O ≤ 1.5 V	6	16		mA
Output Leakage Current	$I_{O\,LEAK}$	$V_{IN(+)}$ = 1 V, $V_{IN(-)}$ = 0 V, V_O = 5 V		0.1		nA
Response Time		R_L = 5.1 kΩ, V_{RL} = 5 V		1.3		μs

APPLICATION CIRCUIT EXAMPLE

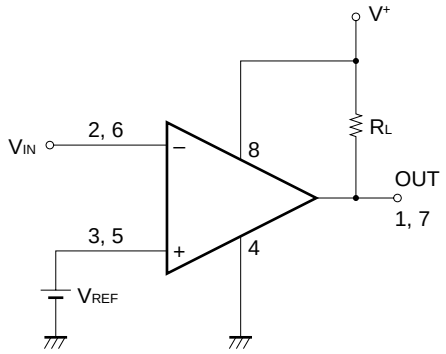

V_{REF}: V^- to V^+ –1.5 (V)

COMPARATOR with HYSTERESIS CIRCUIT

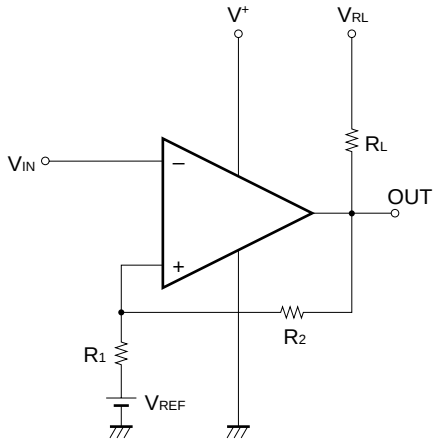

- Threshold voltage

$$V_{TH\,(High)} \fallingdotseq V_{REF} + \frac{R_1}{R_L + R_2 + R_1}\,(V_{RL} - V_{REF})$$

$$V_{TH\,(Low)} \fallingdotseq V_{REF} - \frac{R_1}{R_1 + R_2}\,(V_{REF} - V_{OL})$$

$(V_{RL} > V_{REF} > V_{OL})$

TYPICAL PERFORMANCE CHARACTERISTICS (T_A = 25 °C, TYP.)

POWER DISSIPATION

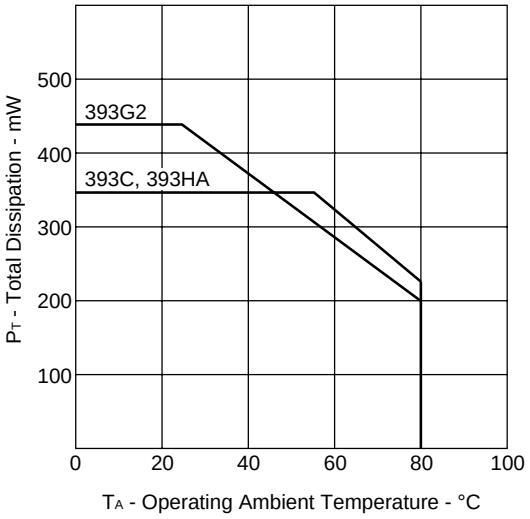

SUPPLY CURRENT

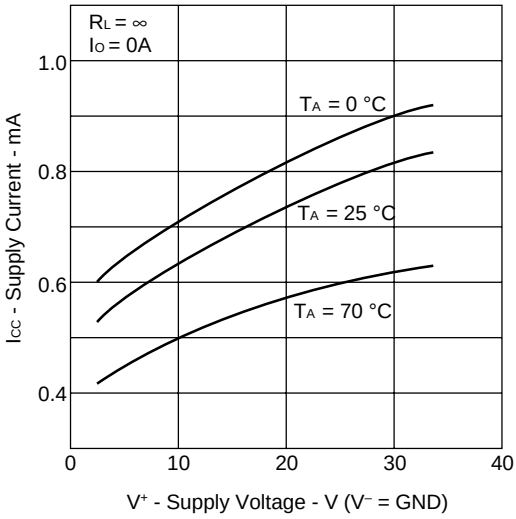

★ INPUT OFFSET VOLTAGE

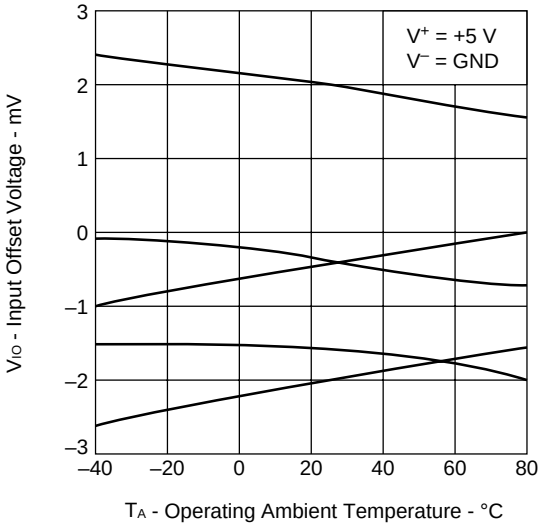

INPUT BIAS CURRENT

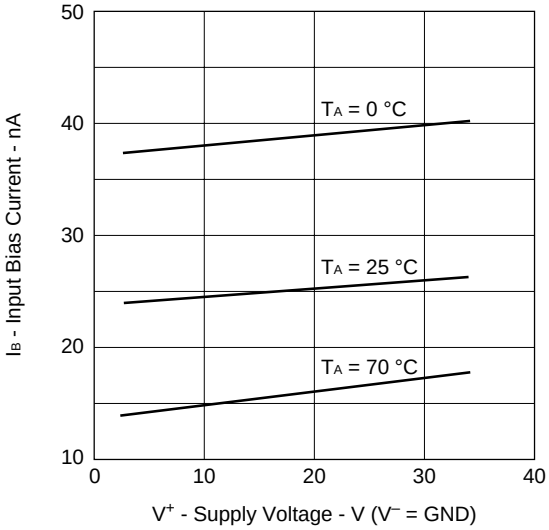

OUTPUT SATURATION VOLTAGE

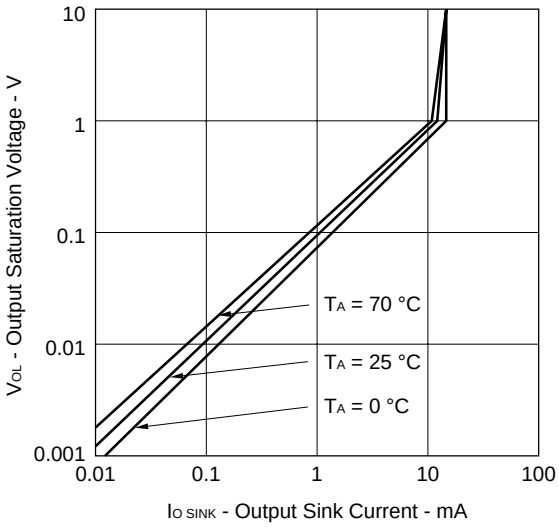

RESPONSE TIME FOR VARIOUS INPUT OVERDRIVES I

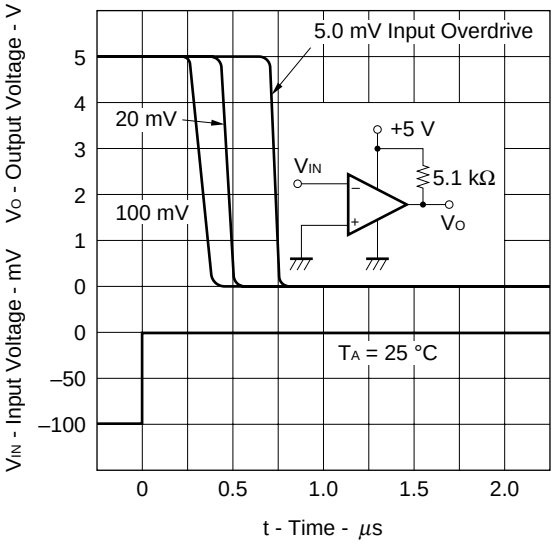

RESPONSE TIME FOR VARIOUS INPUT OVERDRIVES II

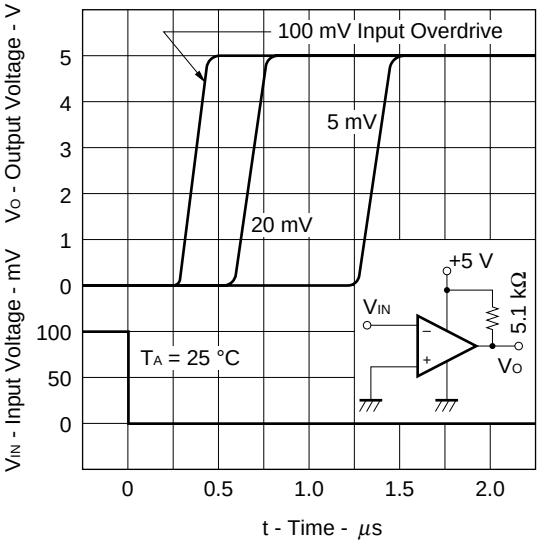

PACKAGE DRAWINGS

8PIN PLASTIC DIP (300 mil)

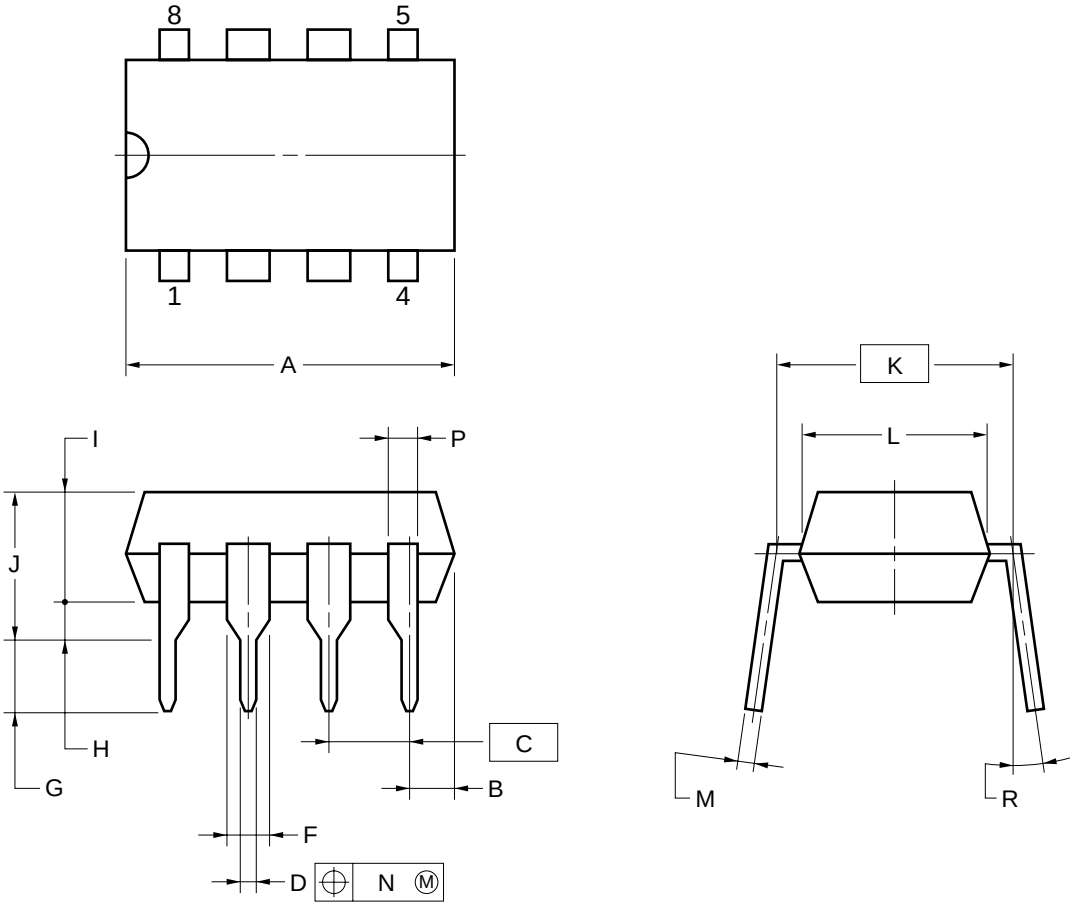

NOTES

1) Each lead centerline is located within 0.25 mm (0.01 inch) of its true position (T.P.) at maximum material condition.

2) Item "K" to center of leads when formed parallel.

ITEM	MILLIMETERS	INCHES
A	10.16 MAX.	0.400 MAX.
B	1.27 MAX.	0.050 MAX.
C	2.54 (T.P.)	0.100 (T.P.)
D	0.50±0.10	$0.020^{+0.004}_{-0.005}$
F	1.4 MIN.	0.055 MIN.
G	3.2±0.3	0.126±0.012
H	0.51 MIN.	0.020 MIN.
I	4.31 MAX.	0.170 MAX.
J	5.08 MAX.	0.200 MAX.
K	7.62 (T.P.)	0.300 (T.P.)
L	6.4	0.252
M	$0.25^{+0.10}_{-0.05}$	$0.010^{+0.004}_{-0.003}$
N	0.25	0.01
P	0.9 MIN.	0.035 MIN.
R	0~15°	0~15°

P8C-100-300B,C-1

8 PIN PLASTIC SOP (225 mil)

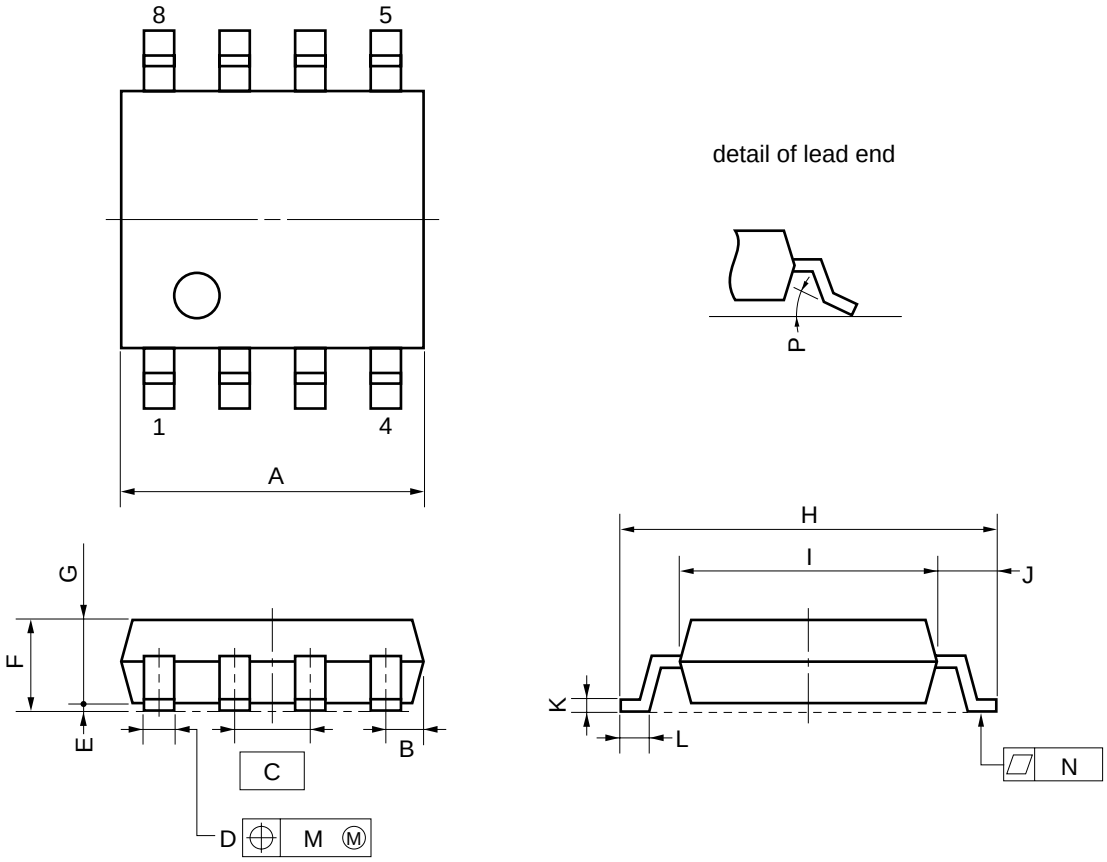

NOTE

Each lead centerline is located within 0.12 mm (0.005 inch) of its true position (T.P.) at maximum material condition.

ITEM	MILLIMETERS	INCHES
A	5.37 MAX.	0.212 MAX.
B	0.78 MAX.	0.031 MAX.
C	1.27 (T.P.)	0.050 (T.P.)
D	$0.40^{+0.10}_{-0.05}$	$0.016^{+0.004}_{-0.003}$
E	0.1±0.1	0.004±0.004
F	1.8 MAX.	0.071 MAX.
G	1.49	0.059
H	6.5±0.3	0.256±0.012
I	4.4	0.173
J	1.1	0.043
K	$0.15^{+0.10}_{-0.05}$	$0.006^{+0.004}_{-0.002}$
L	0.6±0.2	$0.024^{+0.008}_{-0.009}$
M	0.12	0.005
N	0.10	0.004
P	$3^{\circ}{}^{+7^{\circ}}_{-3^{\circ}}$	$3^{\circ}{}^{+7^{\circ}}_{-3^{\circ}}$

S8GM-50-225B-4

9 PIN PLASTIC SLIM SIP

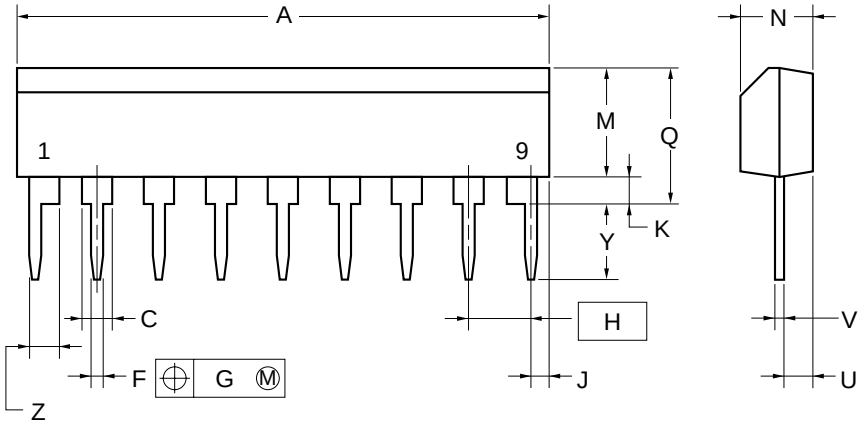

NOTE

Each lead centerline is located within 0.25 mm (0.01 inch) of its true position (T.P.) at maximum material condition.

ITEM	MILLIMETERS	INCHES
A	22.86 MAX.	0.900 MAX.
C	1.1 MIN.	0.043 MIN.
F	0.5±0.1	$0.02^{+0.004}_{-0.005}$
G	0.25	0.010
H	2.54	0.100
J	1.27 MAX.	0.050 MAX.
K	0.51 MIN.	0.020 MIN.
M	5.08 MAX.	0.200 MAX.
N	2.8±0.2	$0.11^{+0.009}_{-0.008}$
Q	5.75 MAX.	0.227 MAX.
U	1.5 MAX.	0.059 MAX.
V	$0.25^{+0.10}_{-0.05}$	$0.01^{+0.004}_{-0.003}$
Y	3.2±0.5	0.126±0.02
Z	1.1 MIN.	0.043 MIN.

P9HA-254B-1

RECOMMENDED SOLDERING CONDITIONS

When soldering this product, it is highly recommended to observe the conditions as shown below. If other soldering processes are used, or if the soldering is performed under different conditions, please make sure to consult with our sales offices.

For more details, refer to our document **"SEMICONDUCTOR DEVICE MOUNTING TECHNOLOGY MANUAL" (C10535E)**.

Type of surface mount device

μPC393G2: 8-pin plastic SOP (225 mil)

Process	Conditions	Symbol
Infrared Ray Reflow	Peak temperature: 230 °C or below (Package surface temperature), Reflow time: 30 seconds or less (at 210 °C or higher), Maximum number of reflow processes: 1 time.	IR30-00-1
Vapor Phase Soldering	Peak temperature: 215 °C or below (Package surface temperature), Reflow time: 40 seconds or less (at 200 °C or higher), Maximum number of reflow processes: 1 time.	VP15-00-1
Wave Soldering	Solder temperature: 260 °C or below, Flow time: 10 seconds or less, Maximum number of flow processes: 1 time, Pre-heating temperature: 120 °C or below (Package surface temperature).	WS60-00-1
Partial Heating Method	Pin temperature: 300 °C or below, Heat time: 3 seconds or less (Per each side of the device).	–

Caution Apply only one kind of soldering condition to a device, except for "partial heating method", or the device will be damaged by heat stress.

Type of through-hold device

μPC393C : 8-pin plastic DIP (300 mil)
μPD393HA : 9-pin plastic slim SIP

Process	Conditions
Wave Soldering (only to leads)	Solder temperature: 260 °C or below, Flow time: 10 seconds or less.
★ Partial Heating Method	Pin temperature: 300 °C or below, Heat time: 3 seconds or less (per each lead.)

Caution For through-hole device, the wave soldering process must be applied only to leads, and make sure that the package body does not get jet soldered.

REFERENCE DOCUMENTS

QUALITY GRADES ON NEC SEMICONDUCTOR DEVICES	C11531E
SEMICONDUCTOR DEVICE MOUNTING TECHNOLOGY MANUAL	C10535E
IC PACKAGE MANUAL	C10943X
GUIDE TO QUALITY ASSUARANCE FOR SEMICONDUCTOR DEVICES	MEI-1202
SEMICONDUCTORS SELECTION GUIDE	X10679E
NEC SEMICONDUCTOR DEVICE RELIABILITY/ QUALITY CONTROL SYSTEM - STANDARD LINEAR IC	IEI-1212

[MEMO]

The application circuits and their parameters are for reference only and are not intended for use in actual design-ins.

No part of this document may be copied or reproduced in any form or by any means without the prior written consent of NEC Corporation. NEC Corporation assumes no responsibility for any errors which may appear in this document.
NEC Corporation does not assume any liability for infringement of patents, copyrights or other intellectual property rights of third parties by or arising from use of a device described herein or any other liability arising from use of such device. No license, either express, implied or otherwise, is granted under any patents, copyrights or other intellectual property rights of NEC Corporation or others.
While NEC Corporation has been making continuous effort to enhance the reliability of its semiconductor devices, the possibility of defects cannot be eliminated entirely. To minimize risks of damage or injury to persons or property arising from a defect in an NEC semiconductor device, customers must incorporate sufficient safety measures in its design, such as redundancy, fire-containment, and anti-failure features.
NEC devices are classified into the following three quality grades:
"Standard", "Special", and "Specific". The Specific quality grade applies only to devices developed based on a customer designated "quality assurance program" for a specific application. The recommended applications of a device depend on its quality grade, as indicated below. Customers must check the quality grade of each device before using it in a particular application.

Standard: Computers, office equipment, communications equipment, test and measurement equipment, audio and visual equipment, home electronic appliances, machine tools, personal electronic equipment and industrial robots

Special: Transportation equipment (automobiles, trains, ships, etc.), traffic control systems, anti-disaster systems, anti-crime systems, safety equipment and medical equipment (not specifically designed for life support)

Specific: Aircrafts, aerospace equipment, submersible repeaters, nuclear reactor control systems, life support systems or medical equipment for life support, etc.

The quality grade of NEC devices is "Standard" unless otherwise specified in NEC's Data Sheets or Data Books.
If customers intend to use NEC devices for applications other than those specified for Standard quality grade, they should contact an NEC sales representative in advance.
Anti-radioactive design is not implemented in this product.

M4 96.5