查询TC7MA244FK供应商 捷多邦，专业PCB打样工厂，24小时加急出货

TOSHIBA CMOS DIGITAL INTEGRATED CIRCUIT SILICON MONOLITHIC

TC7MA244FK

LOW-VOLTAGE OCTAL BUS BUFFER WITH 3.6 V TOLERANT INPUTS AND OUTPUTS

The TC7MA244FK is a high performance CMOS OCTAL BUS BUFFER. Designed for use in 1.8, 2.5 or 3.3 Volt systems, it achieves high speed operation while maintaining the CMOS low power dissipation.
It is also designed with over voltage tolerant inputs and outputs up to 3.6 V.
This device is non-inverting 3-state buffer having four active-low output enables. When the $\overline{OE}$ input is high, the outputs are in a high impedance state. This device is designed to be used with 3-state memory address drivers, etc.
All inputs are equipped with protection circuits against static discharge.

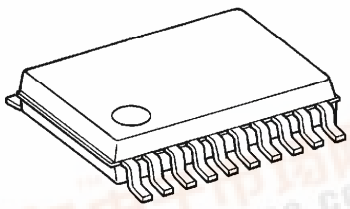

VSSOP20-P-0030-0.50

Weight : 0.03 g (typ.)

Features

- Low Voltage Operation : V_{CC} = 1.8~3.6 V
- High Speed Operation : t_{pd} = 3.5 ns (max) at V_{CC} = 3.0~3.6 V
  : t_{pd} = 4.2 ns (max) at V_{CC} = 2.3~2.7 V
  : t_{pd} = 8.4 ns (max) at V_{CC} = 1.8 V
- 3.6 V Tolerant inputs and outputs.
- Output Current : I_{OH}/I_{OL} = ±24 mA (min) at V_{CC} = 3.0 V
  : I_{OH}/I_{OL} = ±18 mA (min) at V_{CC} = 2.3 V
  : I_{OH}/I_{OL} = ±6 mA (min) at V_{CC} = 1.8 V
- Latch-up Performance : ±300 mA
- ESD Performance : Human Body Model > ±2000 V
  : Machine Model > ±200 V
- Package : VSSOP (US20)
- Power Down Protection is provided on all inputs and outputs.
- Supports live insertion / withdrawal (Note 1)

(Note 1): To ensure the high-impedance state during power up or power down, $\overline{OE}$ should be tied to V_{CC} through a pullup resistor; the minimum value of the resistor is determined by the current-sourcing capability of the driver.

980910EBA1

● TOSHIBA is continually working to improve the quality and the reliability of its products. Nevertheless, semiconductor devices in general can malfunction or fail due to their inherent electrical sensitivity and vulnerability to physical stress. It is the responsibility of the buyer, when utilizing TOSHIBA products, to observe standards of safety, and to avoid situations in which a malfunction or failure of a TOSHIBA product could cause loss of human life, bodily injury or damage to property. In developing your designs, please ensure that TOSHIBA products are used within specified operating ranges as set forth in the most recent products specifications. Also, please keep in mind the precautions and conditions set forth in the TOSHIBA Semiconductor Reliability Handbook.
● The products described in this document are subject to the foreign exchange and foreign trade laws.
● The information contained herein is presented only as a guide for the applications of our products. No responsibility is assumed by TOSHIBA CORPORATION for any infringements of intellectual property or other rights of the third parties which may result from its use. No license is granted by implication or otherwise under any intellectual property or other rights of TOSHIBA CORPORATION or others.
● The information contained herein is subject to change without notice.

找PDF 维库一下 pdf.dzsc.com

Pin Assignment

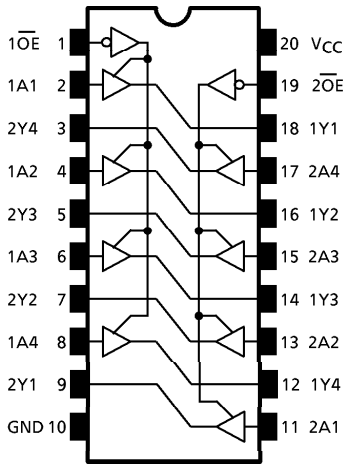

(TOP VIEW)

IEC Logic Symbol

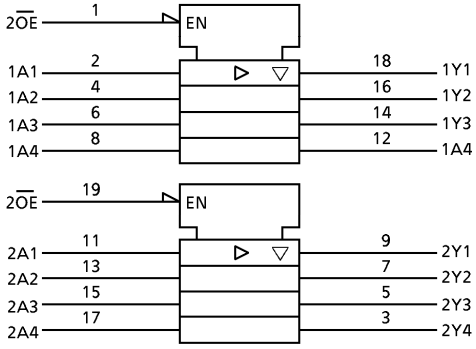

Truth Table

INPUTS		OUTPUTS
$\overline{OE}$	An	
L	L	L
L	H	H
H	X	Z

X : Don't Care
Z : High Impedance

Maximum Ratings

PARAMETER	SYMBOL	RATING	UNIT
Power Supply Voltage	V_{CC}	−0.5~4.6	V
DC Input Voltage	V_{IN}	−0.5~4.6	V
DC Output Voltage	V_{OUT}	−0.5~4.6 (Note 1)	V
		−0.5~V_{CC} + 0.5 (Note 2)	
Input Diode Current	I_{IK}	−50	mA
Output Diode Current	I_{OK}	±50 (Note 3)	mA
DC Output Current	I_{OUT}	±50	mA
Power Dissipation	P_D	180	mW
DC V_{CC} / Ground Current	I_{CC} / I_{GND}	±100	mA
Storage Temperature	T_{stg}	−65~150	°C

(Note 1): Off-State
(Note 2): High or Low State. I_{OUT} absolute maximum rating must be observed.
(Note 3): V_{OUT} < GND, V_{OUT} > V_{CC}

Recommended Operating Range

PARAMETER	SYMBOL	RATING	UNIT
Supply Voltage	V_{CC}	1.8~3.6	V
		1.2~3.6 (Note 4)	
Input Voltage	V_{IN}	−0.3~3.6	V
Output Voltage	V_{OUT}	0~3.6 (Note 5)	V
		0~ V_{CC} (Note 6)	
Output Current	I_{OH} / I_{OL}	±24 (Note 7)	mA
		±18 (Note 8)	
		±6 (Note 9)	
Operating Temperature	T_{opr}	−40~85	°C
Input Rise And Fall Time	dt / dv	0~10 (Note 10)	ns / V

(Note 4): Data Retention Only
(Note 5): Off-State
(Note 6): High or Low State
(Note 7): V_{CC} = 3.0~3.6 V
(Note 8): V_{CC} = 2.3~2.7 V
(Note 9): V_{CC} = 1.8 V
(Note 10): V_{IN} = 0.8~2.0 V, V_{CC} = 3.0 V

Electrical Characteristics

DC characteristics (Ta = −40~85°C, 2.7 V < V_{CC} ≦ 3.6 V)

PARAMETER		SYMBOL	TEST CONDITION		V_{CC} (V)	Min	Max	UNIT
Input Voltage	"H" Level	V_{IH}			2.7~3.6	2.0	—	V
	"L" Level	V_{IL}			2.7~3.6	—	0.8	
Output Voltage	"H" Level	V_{OH}	V_{IN} = V_{IH} or V_{IL}	I_{OH} = −100 μA	2.7~3.6	V_{CC} − 0.2	—	V
				I_{OH} = −12 mA	2.7	2.2	—	
				I_{OH} = −18 mA	3.0	2.4	—	
				I_{OH} = −24 mA	3.0	2.2	—	
	"L" Level	V_{OL}	V_{IN} = V_{IH} or V_{IL}	I_{OL} = 100 μA	2.7~3.6	—	0.2	
				I_{OL} = 12 mA	2.7	—	0.4	
				I_{OL} = 18 mA	3.0	—	0.4	
				I_{OL} = 24 mA	3.0	—	0.55	
Input Leakage Current		I_{IN}	V_{IN} = 0~3.6 V		2.7~3.6	—	±5.0	μA
3-State Output Off-State Current		I_{OZ}	V_{IN} = V_{IH} or V_{IL} V_{OUT} = 0~3.6 V		2.7~3.6	—	±10.0	μA
Power Off Leakage Current		I_{OFF}	V_{IN}, V_{OUT} = 0~3.6 V		0	—	10.0	μA
Quiescent Supply Current		I_{CC}	V_{IN} = V_{CC} or GND		2.7~3.6	—	20.0	μA
			V_{CC} ≦ (V_{IN}, V_{OUT}) ≦ 3.6 V		2.7~3.6	—	±20.0	
Increase In I_{CC} Per Input		ΔI_{CC}	V_{IH} = V_{CC} − 0.6 V		2.7~3.6	—	750	μA

Electrical Characteristics

DC characteristics (Ta = −40~85°C, 2.3 V ≦ V_{CC} ≦ 2.7 V)

PARAMETER		SYMBOL	TEST CONDITION		V_{CC} (V)	Min	Max	UNIT
Input Voltage	"H" Level	V_{IH}			2.3~2.7	1.6	—	V
	"L" Level	V_{IL}			2.3~2.7	—	0.7	
Output Voltage	"H" Level	V_{OH}	V_{IN} = V_{IH} or V_{IL}	I_{OH} = −100 μA	2.3~2.7	V_{CC} − 0.2	—	V
				I_{OH} = −6 mA	2.3	2.0	—	
				I_{OH} = −12 mA	2.3	1.8	—	
				I_{OH} = −18 mA	2.3	1.7	—	
	"L" Level	V_{OL}	V_{IN} = V_{IH} or V_{IL}	I_{OL} = 100 μA	2.3~2.7	—	0.2	
				I_{OL} = 12 mA	2.3	—	0.4	
				I_{OL} = 18 mA	2.3	—	0.6	
Input Leakage Current		I_{IN}	V_{IN} = 0~3.6 V		2.3~2.7	—	±5.0	μA
3-State Output Off-State Current		I_{OZ}	V_{IN} = V_{IH} or V_{IL} V_{OUT} = 0~3.6 V		2.3~2.7	—	±10.0	μA
Power Off Leakage Current		I_{OFF}	V_{IN}, V_{OUT} = 0~3.6 V		0	—	10.0	μA
Quiescent Supply Current		I_{CC}	V_{IN} = V_{CC} or GND		2.3~2.7	—	20.0	μA
			V_{CC} ≦ (V_{IN}, V_{OUT}) ≦ 3.6 V		2.3~2.7	—	±20.0	

Electrical Characteristics

DC characteristics (Ta = −40~85°C, 1.8 V ≦ V_{CC} < 2.3 V)

PARAMETER		SYMBOL	TEST CONDITION		V_{CC} (V)	Min	Max	UNIT
Input Voltage	"H" Level	V_{IH}			1.8~2.3	0.7 × V_{CC}	—	V
	"L" Level	V_{IL}			1.8~2.3	—	0.2 × V_{CC}	
Output Voltage	"H" Level	V_{OH}	V_{IN} = V_{IH} or V_{IL}	I_{OH} = −100 μA	1.8	V_{CC} − 0.2	—	V
				I_{OH} = −6 mA	1.8	1.4	—	
	"L" Level	V_{OL}	V_{IN} = V_{IH} or V_{IL}	I_{OL} = 100 μA	1.8	—	0.2	
				I_{OL} = 6 mA	1.8	—	0.3	
Input Leakage Current		I_{IN}	V_{IN} = 0~3.6 V		1.8	—	±5.0	μA
3-State Output Off-State Current		I_{OZ}	V_{IN} = V_{IH} or V_{IL} V_{OUT} = 0~3.6 V		1.8	—	±10.0	μA
Power Off Leakage Current		I_{OFF}	V_{IN}, V_{OUT} = 0~3.6 V		0	—	10.0	μA
Quiescent Supply Current		I_{CC}	V_{IN} = V_{CC} or GND		1.8	—	20.0	μA
			V_{CC} ≦ (V_{IN}, V_{OUT}) ≦ 3.6 V		1.8	—	±20.0	

AC characteristics (Ta = −40~85°C, Input t_r = t_f = 2.0 ns, C_L = 30 pF, R_L = 500 Ω)

PARAMETER	SYMBOL	TEST CONDITION	V_{CC} (V)	Min	Max	UNIT
Propagation Delay Time	t_{pLH} t_{pHL}	(Fig.1, 2)	1.8	1.5	8.4	ns
			2.5 ± 0.2	0.8	4.2	
			3.3 ± 0.3	0.6	3.5	
3-State Output Enable Time	t_{pZL} t_{pZH}	(Fig.1, 3)	1.8	1.5	9.8	ns
			2.5 ± 0.2	0.8	5.5	
			3.3 ± 0.3	0.6	4.5	
3-State Output Disable Time	t_{pLZ} t_{pHZ}	(Fig.1, 3)	1.8	1.5	5.8	ns
			2.5 ± 0.2	0.8	3.2	
			3.3 ± 0.3	0.6	3.0	
Output To Output Skew	t_{osLH} t_{osHL}	(Note 11)	1.8	—	0.5	ns
			2.5 ± 0.2	—	0.5	
			3.3 ± 0.3	—	0.5	

For C_L = 50 pF, add approximately 300 ps to the AC maximum specification.

(Note 11): Parameter guaranteed by design.
(t_{osLH} = $|t_{pLHm} - t_{pLHn}|$, t_{osHL} = $|t_{pHLm} - t_{pHLn}|$)

Dynamic switching characteristics (Ta = 25°C, Input $t_r = t_f$ = 2.0 ns, C_L = 30 pF)

PARAMETER	SYMBOL	TEST CONDITION	V_{CC} (V)	Typ.	UNIT
Quiet Output Maximum Dynamic V_{OL}	V_{OLP}	V_{IH} = 1.8 V, V_{IL} = 0 V (Note 12)	1.8	0.25	V
		V_{IH} = 2.5 V, V_{IL} = 0 V (Note 12)	2.5	0.6	
		V_{IH} = 3.3 V, V_{IL} = 0 V (Note 12)	3.3	0.8	
Quiet Output Minimum Dynamic V_{OL}	V_{OLV}	V_{IH} = 1.8 V, V_{IL} = 0 V (Note 12)	1.8	−0.25	V
		V_{IH} = 2.5 V, V_{IL} = 0 V (Note 12)	2.5	−0.6	
		V_{IH} = 3.3 V, V_{IL} = 0 V (Note 12)	3.3	−0.8	
Quiet Output Minimum Dynamic V_{OH}	V_{OHV}	V_{IH} = 1.8 V, V_{IL} = 0 V (Note 12)	1.8	1.5	V
		V_{IH} = 2.5 V, V_{IL} = 0 V (Note 12)	2.5	1.9	
		V_{IH} = 3.3 V, V_{IL} = 0 V (Note 12)	3.3	2.2	

(Note 12): Parameter guaranteed by design.

Capacitive characteristics (Ta = 25°C)

PARAMETER	SYMBOL	TEST CONDITION	V_{CC} (V)	Typ.	UNIT
Input Capacitance	C_{IN}		1.8, 2.5, 3.3	6	pF
Output Capacitance	C_{OUT}		1.8, 2.5, 3.3	7	pF
Power Dissipation Capacitance	C_{PD}	f_{IN} = 10 MHz (Note 13)	1.8, 2.5, 3.3	20	pF

(Note 13): C_{PD} is defined as the value of the internal equivalent capacitance which is calculated from the operating current consumption without load.
Average operating current can be obtained by the equation :

$$I_{CC\,(opr.)} = C_{PD} \cdot V_{CC} \cdot f_{IN} + I_{CC} / 8 \text{ (per bit)}$$

Test Circuit

Fig.1

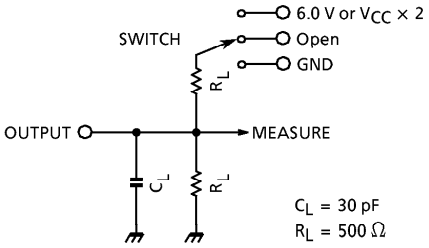

PARAMETER	SWITCH
t_{pLH}, t_{pHL}	Open
t_{pLZ}, t_{pZL}	6.0 V @V_{CC} = 3.3 ± 0.3 V V_{CC} × 2 @V_{CC} = 2.5 ± 0.2 V @V_{CC} = 1.8 V
t_{pHZ}, t_{pZH}	GND

AC Waveform

Fig.2 t_{pLH}, t_{pHL}

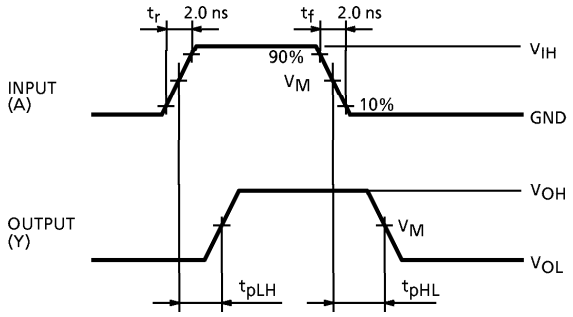

Fig.3 t_{pLZ}, t_{pHZ}, t_{pZL}, t_{pZH}

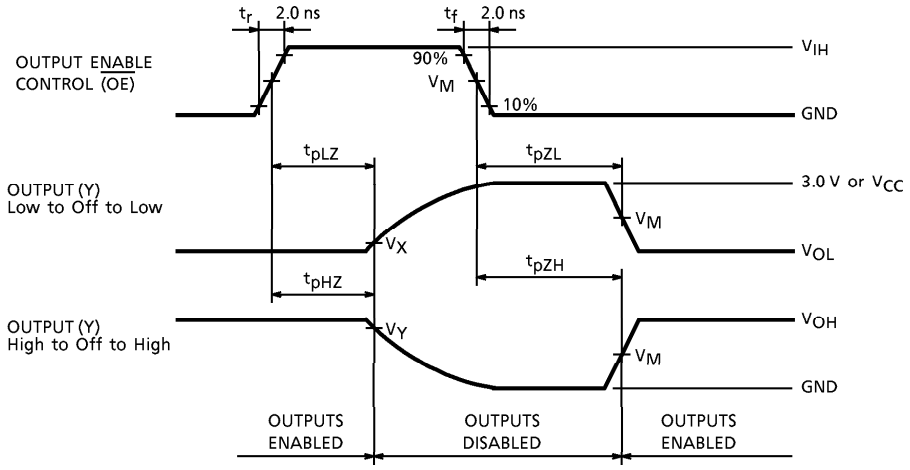

SYMBOL	V_{CC}		
	3.3 ± 0.3 V	2.5 ± 0.2 V	1.8 V
V_{IH}	2.7 V	V_{CC}	V_{CC}
V_M	1.5 V	V_{CC} / 2	V_{CC} / 2
V_X	V_{OL} + 0.3 V	V_{OL} + 0.15 V	V_{OL} + 0.15 V
V_Y	V_{OH} − 0.3 V	V_{OH} − 0.15 V	V_{OH} − 0.15 V

Outline Drawing

VSSOP20-P-0030-0.50 Unit : mm

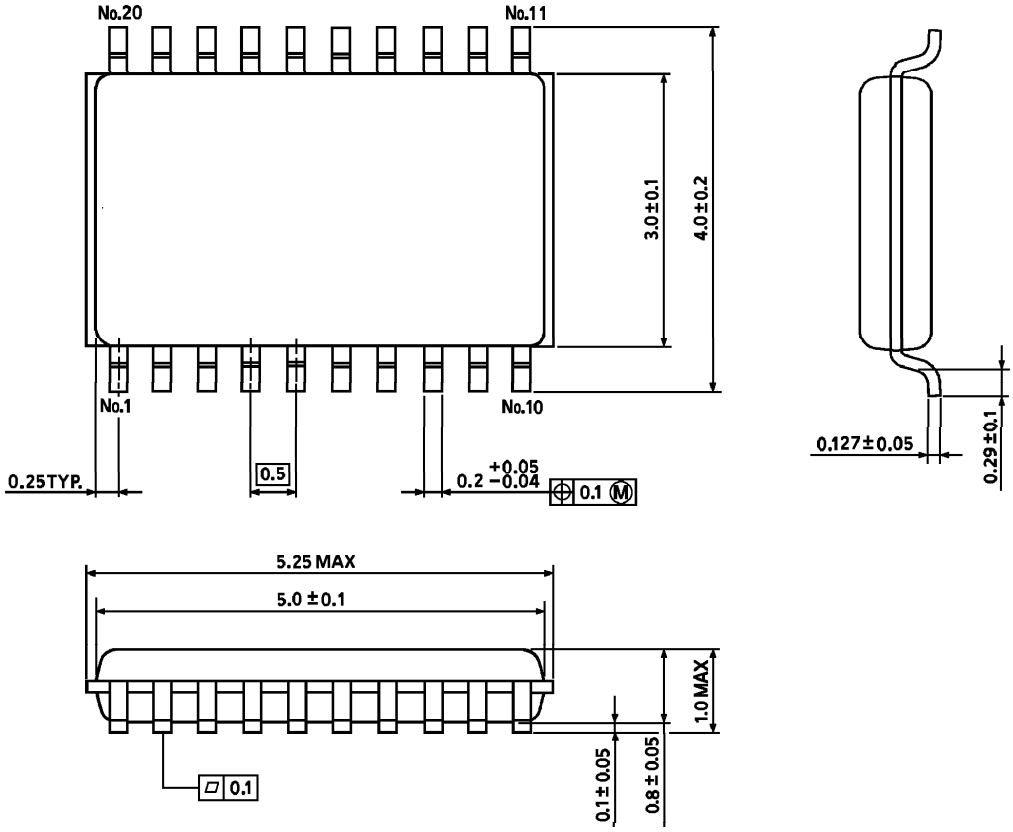

Weight : 0.03 g (typ.)