CMOS LSI

No. ※ 5010

LC895170W

CD-ROM Error Correction LSI

Preliminary

Overview

The LC895170W is an upwardly compatible version of the LC89517K that supports a larger external buffer RAM capacity and is provided in a more compact package.

Functions

- CD-ROM ECC function, subcode read function, AT interface

Features

- Support for double-speed operation at a 16.9344 MHz operating frequency
  Either SRAM (120 ns), DRAM (80 ns), or PSRAM (85 ns) can be used.
- Support for quad-speed operation at a 33.8688 MHz operating frequency
  SRAM (70 ns) must be used.
- On-chip 12-byte output FIFO for sub-CPU to host computer transfers
- On-chip 12-byte input FIFO for host computer to sub-CPU transfers
- Subcode data can be written to SRAM by connecting the CD-DSP SUB-CODE pin and the sub-CPU can read the subcode values.
- The sub-CPU can access buffer RAM through the LC895170W.
- On-chip data transfer function for buffer RAM to buffer RAM transfers
- Pseudo-SRAM (up to 128 kwords × 8 bits × 1) can be used.
- DRAM (256 kwords × 4 bits × 2, or 1 Mwords × 4 bits × 2) can be used.
- Transfer speed: 2.8 Mbytes/s
  (The transfer speed depends on the operating frequency.)
- Operating frequencies: 16.9344 MHz (double speed) or 33.8688 MHz (quad speed)

Package Dimensions

unit: mm

3181-SQFP100

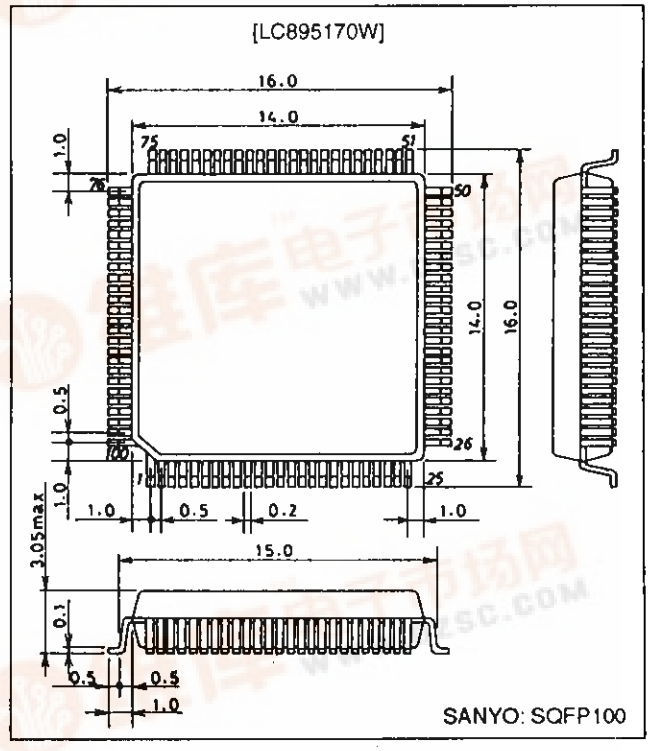

Block Diagram

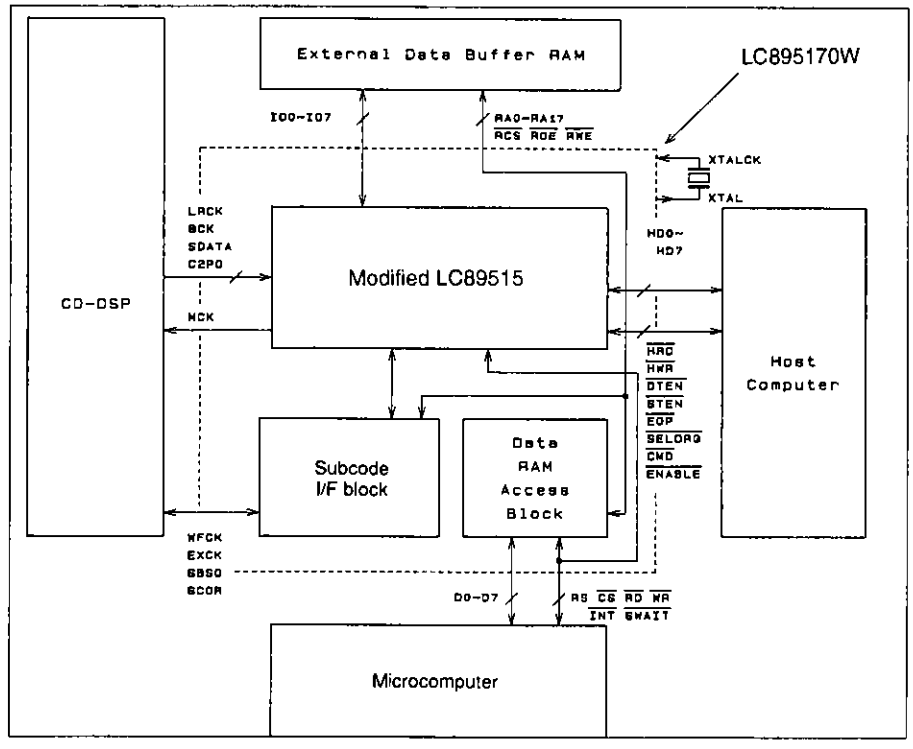

Pin Assignment

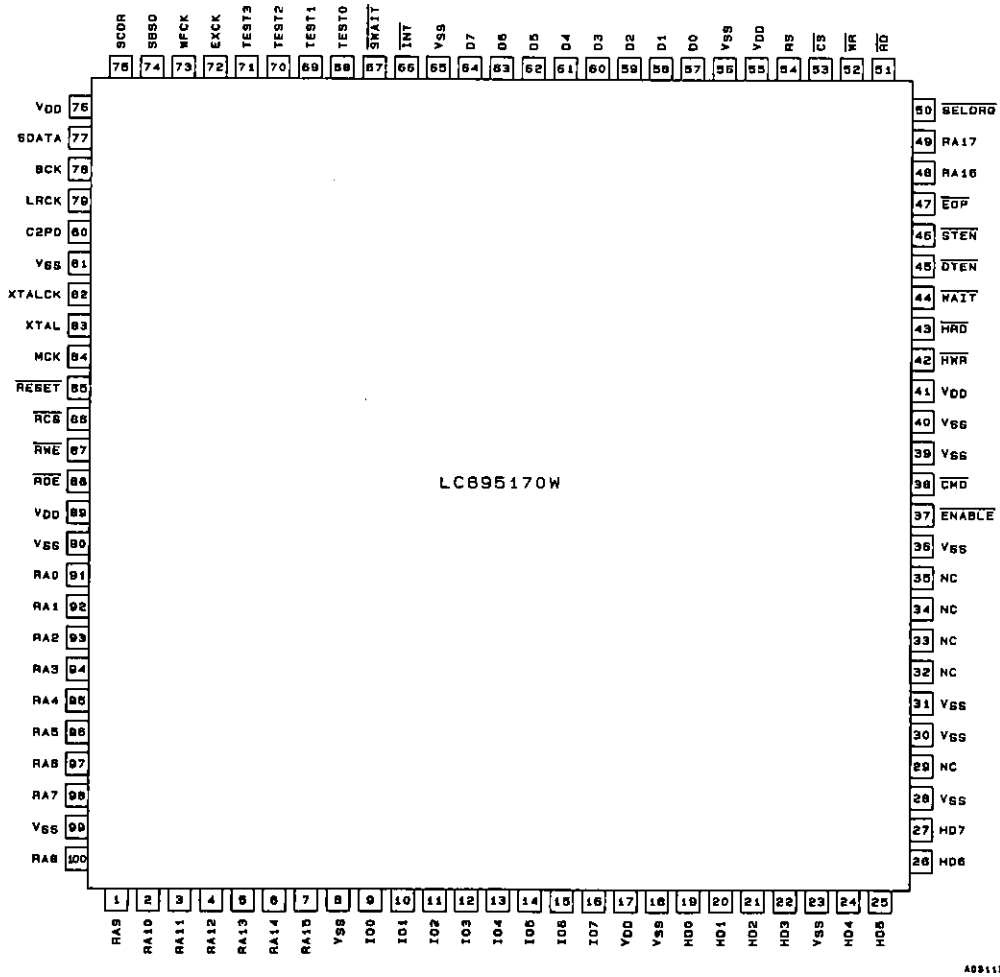

Top View

Pin Functions

Type: I: Input pin, O: Output pin, B: Bidirectional pin, P: Power supply pin, NC: Unconnected pin

Pin No.	Pin	Type	Function
1	RA9	O	Data buffer RAM address signal outputs
2	RA10	O	
3	RA11	O	
4	RA12	O	
5	RA13	O	
6	RA14	O	
7	RA15	O	
8	V_{SS}	P	
9	IO0	B	Data buffer RAM data signal outputs Pull-up resistors on chip
10	IO1	B	
11	IO2	B	
12	IO3	B	
13	IO4	B	
14	IO5	B	
15	IO6	B	
16	IO7	B	
17	V_{DD}	P	
18	V_{SS}	P	
19	HD0	B	Host data signals Pull-up resistors on chip
20	HD1	B	
21	HD2	B	
22	HD3	B	
23	V_{SS}	P	
24	HD4	B	Host data signals Pull-up resistors on chip
25	HD5	B	
26	HD6	B	
27	HD7	B	
28	V_{SS}	P	
29		NC	
30	V_{SS}	P	
31	V_{SS}	P	
32		NC	
33		NC	
34		NC	
35		NC	
36	V_{SS}	P	
37	$\overline{ENABLE}$	I	Host chip select signal input
38	$\overline{CMD}$	I	Host command/data selection signal input
39	V_{SS}	P	
40	V_{SS}	P	
41	V_{DD}	P	
42	$\overline{HWR}$	I	Host data write signal input
43	$\overline{HRD}$	I	Host data read signal input
44	$\overline{WAIT}$	O	Host wait signal. Can be switched to function as a DRQ signal.
45	$\overline{DTEN}$	O	Data enable signal output
46	$\overline{STEN}$	O	Status enable signal output
47	$\overline{EOP}$	O	End of process signal output. Used during DMA data transfers.
48	RA16	O	Data buffer RAM address signal outputs
49	RA17	O	
50	$\overline{SELDRQ}$	I	Host data transfer mode selection signal input

Continued on next page.

Continued from preceding page.

Type: I: Input pin, O: Output pin, B: Bidirectional pin, P: Power supply pin, NC: Unconnected pin

Pin No.	Pin	Type	Function
51	$\overline{RD}$	I	Microprocessor data read signal input
52	$\overline{WR}$	I	Microprocessor data write signal input
53	$\overline{CS}$	I	Chip select signal input (from microprocessor)
54	RS	I	Register selection signal
55	V_{DD}	P	
56	V_{SS}	P	
57	D0	B	Microprocessor data signals Pull-up resistors on chip
58	D1	B	
59	D2	B	
60	D3	B	
61	D4	B	
62	D5	B	
63	D6	B	
64	D7	B	
65	V_{SS}	P	
66	$\overline{INT}$	O	Interrupt request signal output (to the microprocessor) Open-drain output with on-chip pull-up resistor
67	$\overline{SWAIT}$	O	Sub-CPU wait signal
68	TEST0	I	Test inputs should be tied low in normal operation.
69	TEST1	I	
70	TEST2	I	
71	TEST3	I	
72	EXCK	O	Subcode I/O pins
73	WFCK	I	
74	SBSO	I	
75	SCOR	I	
76	V_{DD}	P	
77	SDATA	I	Serial data input
78	BCK	I	Serial data input clock
79	LRCK	I	44.1 kHz strobe signal input
80	C2PO	I	C2 pointer input
81	V_{SS}	P	
82	XTALCK	I	Crystal oscillator circuit input
83	XTAL	O	Crystal oscillator circuit output
84	MCK	O	XTALCK-divided-by-2 output
85	$\overline{RESET}$	I	Reset. The LC895170W is reset on a low level input.
86	$\overline{RCS}$	O	RAM chip select
87	$\overline{RWE}$	O	RAM data write signal
88	$\overline{ROE}$	O	RAM data read signal
89	V_{DD}	P	
90	V_{SS}	P	
91	RA0	O	Data buffer RAM address signals output.
92	RA1	O	
93	RA2	O	
94	RA3	O	
95	RA4	O	
96	RA5	O	
97	RA6	O	
98	RA7	O	
99	V_{SS}	P	
100	RA8	O	Data buffer RAM address signal output.

Specifications

Absolute Maximum Ratings at V_{SS} = 0 V

Parameter	Symbol	Conditions	Ratings	Unit
Maximum supply voltage	V_{DD} max	Ta = 25°C	−0.3 to +7.0	V
I/O voltages	$V_I V_O$	Ta = 25°C	−0.3 to V_{DD} + 0.3	V
Allowable power dissipation	Pd max	Ta ≤ 70°C	350	mW
Operating temperature	Topr		−30 to +70	°C
Storage temperature	Tstg		−55 to +125	°C
Soldering thermal stress limit (pins only)		10 seconds	260	°C

Allowable Operating Ranges at Ta = −30 to +70°C, V_{SS} = 0 V

Parameter	Symbol	Conditions	min	typ	max	Unit
Supply voltage	V_{DD}		4.5	5.0	5.5	V
Input voltage range	V_{IN}		0		V_{DD}	V

DC Characteristics at Ta = −30 to +70°C, V_{SS} = 0 V, V_{DD} = 4.5 to 5.5 V

Parameter	Symbol	Conditions	min	typ	max	Unit
Input high level voltage	V_{IH1}	All input pins other than (1) and XTALCK	2.2			V
Input low level voltage	V_{IL1}				0.8	V
Input high level voltage	V_{IH2}	$\overline{RESET}$, all bus pins ($\overline{HRD}$, $\overline{HWR}$, $\overline{ENABLE}$, $\overline{CMD}$, $\overline{RD}$, $\overline{CS}$, $\overline{WR}$, WFCK, SBSO, SCOR) (1)	2.5			V
Input low level voltage	V_{IL2}				0.6	V
Output high level voltage	V_{OH1}	I_{OH1} = −2 mA: All output pins (including bus pins) other than (2) and XTALCK	2.4			V
Output low level voltage	V_{OL1}	I_{OL1} = 2 mA: All output pins (including bus pins) other than (2) and XTALCK			0.4	V
Output low level voltage	V_{OL2}	I_{OL2} = 2 mA: $\overline{INT}$ (on-chip pull-up resistor, open drain) (2)			0.4	V
Output high level voltage	V_{OH3}	I_{OH3} = −6 mA: HD0 to HD7	2.4			V
Output low level voltage	V_{OL3}	I_{OL3} = 6 mA: HD0 to HD7			0.4	V
Input leakage current	I_L	V_I = V_{SS}, V_{DD}: All input pins	−25		+25	μA
Pull-up resistance	R_{UP}	All bus pins, $\overline{INT}$	40	80	160	kΩ