DATA SHEET

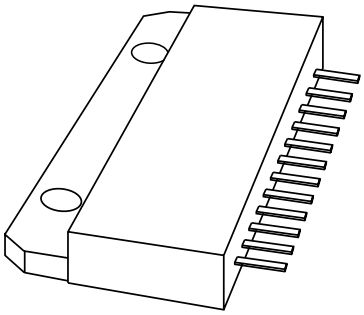

CR6928
Triple video driver hybrid amplifier

Product specification
Supersedes data of 1998 May 07
File under Discrete Semiconductors, SC05

1998 Jul 03

Philips
Semiconductors

PHILIPS

Triple video driver hybrid amplifier CR6928

FEATURES

- Transition times (10 to 90%) with 45 V (p-p) swing and C_L = 10 pF:
  - rise time (typ.) 2.5 ns
  - fall time (typ.) 2.1 ns
- Low power consumption: 11 W with 25 MHz square wave
- Minimum small signal bandwidth: 140 MHz at 1 V (p-p) or 120 MHz at 40 V (p-p)
- Very fast slew rate: 16000 V/µs
- Internal smearing compensation
- Excellent grey-scale linearity
- Unconditional stability
- Gold metallization ensures excellent reliability.

APPLICATIONS

- Cathode-ray tube (CRT) drivers in high-resolution colour monitors.

DESCRIPTION

Hybrid amplifier module comprising three video amplifiers in a SOT347 package.

PINNING

PIN	DESCRIPTION
1, 5, 9	supply voltage (V_S)
2	input 1
3, 7, 11	ground
4	output 1
6	input 2
8	output 2
10	input 3
12	output 3

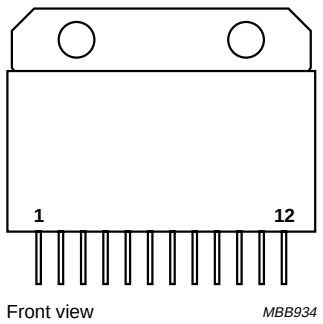

Fig.1 Simplified outline SOT347.

LIMITING VALUES

In accordance with the Absolute Maximum Rating System (IEC 134).

SYMBOL	PARAMETER	MIN.	MAX.	UNIT
V_S	supply voltage (DC)	–	110	V
T_{mb}	operating mounting base temperature	–20	+110	°C
T_{stg}	storage temperature	–40	+125	°C

RECOMMENDED OPERATING CONDITIONS

SYMBOL	PARAMETER	MIN.	MAX.	UNIT
V_S	supply voltage (DC)	–	90	V
T_{mb}	operating mounting base temperature	–20	+100	°C
T_{stg}	storage temperature	–40	+125	°C

CHARACTERISTICS

V_S = 85 V; T_{mb} = 25 °C; C_L = 10 pF; output swing = 45 V (p-p) with 42.5 V DC offset (see Fig.3); unless otherwise specified.

SYMBOL	PARAMETER	CONDITIONS	MIN.	TYP.	MAX.	UNIT
Per amplifier						
I_S	supply current	open input and open output	68	83	98	mA
P_{tot}	total power dissipation	25 MHz square wave	–	10.6	12	W
t_r	rise time transient response	10 to 90%; note 1	–	2.5	3.1	ns
t_f	fall time transient response	10 to 90%; note 1	–	2.1	2.5	ns
BW	small signal bandwidth	between –3 dB points; note 2	140	150	–	MHz
V_{tilt}	low frequency tilt voltage	10 kHz square wave	–	1.3	1.5	V
V_{os}	overshoot voltage (rise and fall time)	adjustable by C1 and C2; see Fig.3	–	3	10	%
NLN	non-linearity	V_O = 15 to 75 V	–	2	5	%
A_V	DC voltage gain	50 Ω source; note 3	11.2	12.4	13.6	V/V
V_G	insertion gain	50 Ω source; note 4	160	180	200	V/V

Notes

1. Input signal is a 100 kHz square wave of 3.46 V (p-p) with 115 mV DC offset (50 Ω source), without R_{level}.
2. Sinewave output signal: 1 V (p-p).
3. Measured V_O/V_I at input test circuit.
4. Measured V_O/V_I at input module.

APPLICATION NOTES

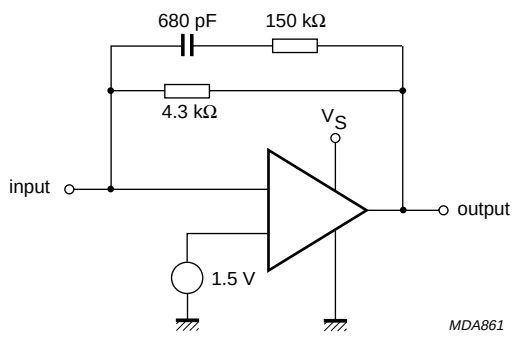

Fig.2 Block diagram, single amplifier.

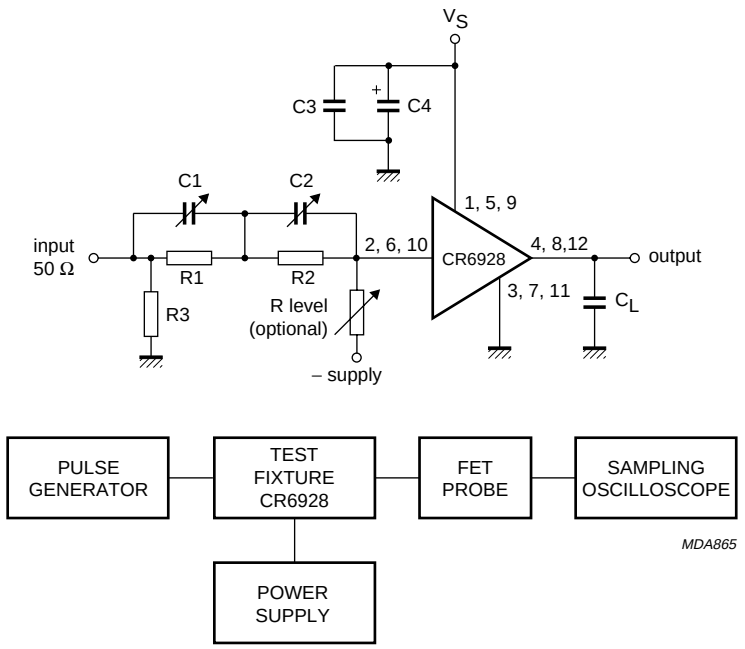

Speed-up circuit (R1, C1; R2, C2) ensures flat gain over the whole frequency range.

Fig.3 CRT test-circuit and block diagram.

Components used in test-circuit (see Fig.3)

COMPONENT	DESCRIPTION	VALUE
C1	variable capacitor	10 to 160 pF (typ. 50 pF)
C2	variable capacitor	10 to 160 pF (typ. 82 pF)
C3	chip capacitor	10 nF
C4	electrolytic capacitor	4.7 μF; 160 V
R1	resistor	275 Ω
R2	resistor	62 Ω
R3	resistor	50 Ω

Test equipment used in test-circuit (see Fig.3)

EQUIPMENT	TYPE DESCRIPTION
Pulse generator	Le Croy; model 9210 with unit 9211
	Philips; model PM5785B (125 MHz) with internal DC offset
Power supply	Philips; model PE1542, 80 V
FET probe	Philips; model PM8943, attenuation 100 : 1
Sampling oscilloscope	Tektronix; model 11801B, sampling head SD26

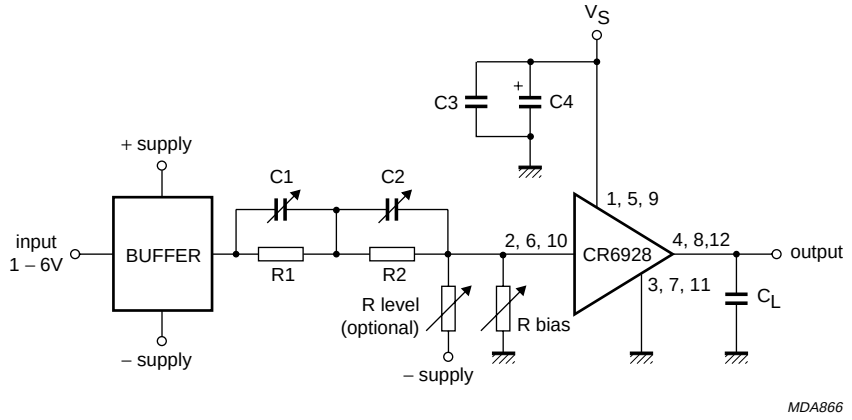

R_{level} and R_{bias} are intended to achieve the required output level and to optimize the frequency smearing performance.
R_{level} has to be adjusted to the required output level (approximately 2 kΩ at V_S = – 12 V).
R_{bias} has to be tuned for the best high frequency smearing performance (200 MHz burst).

Fig.4 Application test-circuit.

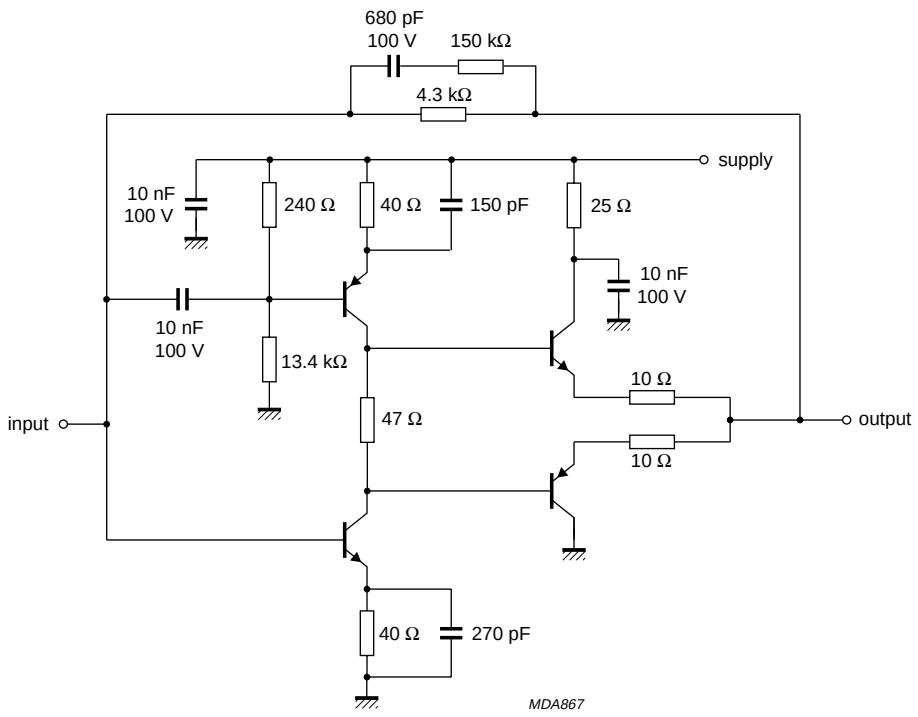

Supply voltages are internally connected.

Fig.5 Internal circuit, single amplifier.

PACKAGE OUTLINE

Ceramic single-ended flat package; heatsink mounted; 2 mounting holes; 12 in-line tin (Sn) plated leads **SOT347**

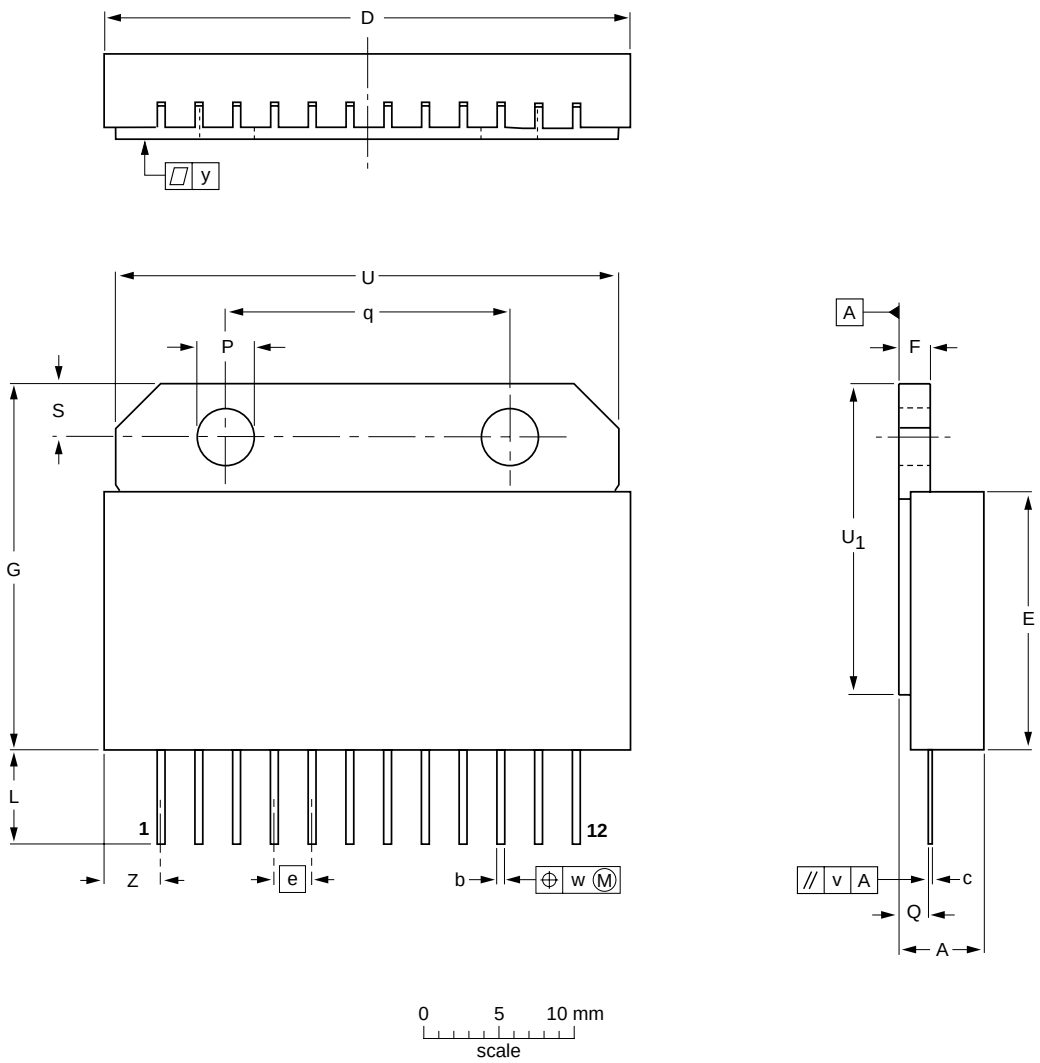

DIMENSIONS (mm are the original dimensions)

UNIT	A	b	c	D	E	e	F	G	L min.	P	Q	q	S	U	U_1	v	w	y	Z max.
mm	6.0 5.6	0.51 0.38	0.25	36.2 35.8	18.2 17.8	2.54	2.0	25.5 24.5	6	4.15 3.85	1.8	19	3.5 3.4	34.4 34.0	22.2 21.8	0.3	0.25	0.1	4.1

OUTLINE VERSION	REFERENCES				EUROPEAN PROJECTION	ISSUE DATE
	IEC	JEDEC	EIAJ			
SOT347						97-06-28

DEFINITIONS

Data sheet status	
Objective specification	This data sheet contains target or goal specifications for product development.
Preliminary specification	This data sheet contains preliminary data; supplementary data may be published later.
Product specification	This data sheet contains final product specifications.
Limiting values	
Limiting values given are in accordance with the Absolute Maximum Rating System (IEC 134). Stress above one or more of the limiting values may cause permanent damage to the device. These are stress ratings only and operation of the device at these or at any other conditions above those given in the Characteristics sections of the specification is not implied. Exposure to limiting values for extended periods may affect device reliability.	
Application information	
Where application information is given, it is advisory and does not form part of the specification.	

LIFE SUPPORT APPLICATIONS

These products are not designed for use in life support appliances, devices, or systems where malfunction of these products can reasonably be expected to result in personal injury. Philips customers using or selling these products for use in such applications do so at their own risk and agree to fully indemnify Philips for any damages resulting from such improper use or sale.

Philips Semiconductors – a worldwide company

Argentina: see South America

Australia: 34 Waterloo Road, NORTH RYDE, NSW 2113, Tel. +61 2 9805 4455, Fax. +61 2 9805 4466

Austria: Computerstr. 6, A-1101 WIEN, P.O. Box 213, Tel. +43 160 1010, Fax. +43 160 101 1210

Belarus: Hotel Minsk Business Center, Bld. 3, r. 1211, Volodarski Str. 6, 220050 MINSK, Tel. +375 172 200 733, Fax. +375 172 200 773

Belgium: see The Netherlands

Brazil: see South America

Bulgaria: Philips Bulgaria Ltd., Energoproject, 15th floor, 51 James Bourchier Blvd., 1407 SOFIA, Tel. +359 2 689 211, Fax. +359 2 689 102

Canada: PHILIPS SEMICONDUCTORS/COMPONENTS, Tel. +1 800 234 7381

China/Hong Kong: 501 Hong Kong Industrial Technology Centre, 72 Tat Chee Avenue, Kowloon Tong, HONG KONG, Tel. +852 2319 7888, Fax. +852 2319 7700

Colombia: see South America

Czech Republic: see Austria

Denmark: Prags Boulevard 80, PB 1919, DK-2300 COPENHAGEN S, Tel. +45 32 88 2636, Fax. +45 31 57 0044

Finland: Sinikalliontie 3, FIN-02630 ESPOO, Tel. +358 9 615800, Fax. +358 9 61580920

France: 51 Rue Carnot, BP317, 92156 SURESNES Cedex, Tel. +33 1 40 99 6161, Fax. +33 1 40 99 6427

Germany: Hammerbrookstraße 69, D-20097 HAMBURG, Tel. +49 40 23 53 60, Fax. +49 40 23 536 300

Greece: No. 15, 25th March Street, GR 17778 TAVROS/ATHENS, Tel. +30 1 4894 339/239, Fax. +30 1 4814 240

Hungary: see Austria

India: Philips INDIA Ltd, Band Box Building, 2nd floor, 254-D, Dr. Annie Besant Road, Worli, MUMBAI 400 025, Tel. +91 22 493 8541, Fax. +91 22 493 0966

Indonesia: PT Philips Development Corporation, Semiconductors Division, Gedung Philips, Jl. Buncit Raya Kav.99-100, JAKARTA 12510, Tel. +62 21 794 0040 ext. 2501, Fax. +62 21 794 0080

Ireland: Newstead, Clonskeagh, DUBLIN 14, Tel. +353 1 7640 000, Fax. +353 1 7640 200

Israel: RAPAC Electronics, 7 Kehilat Saloniki St, PO Box 18053, TEL AVIV 61180, Tel. +972 3 645 0444, Fax. +972 3 649 1007

Italy: PHILIPS SEMICONDUCTORS, Piazza IV Novembre 3, 20124 MILANO, Tel. +39 2 6752 2531, Fax. +39 2 6752 2557

Japan: Philips Bldg 13-37, Kohnan 2-chome, Minato-ku, TOKYO 108-8507, Tel. +81 3 3740 5130, Fax. +81 3 3740 5077

Korea: Philips House, 260-199 Itaewon-dong, Yongsan-ku, SEOUL, Tel. +82 2 709 1412, Fax. +82 2 709 1415

Malaysia: No. 76 Jalan Universiti, 46200 PETALING JAYA, SELANGOR, Tel. +60 3 750 5214, Fax. +60 3 757 4880

Mexico: 5900 Gateway East, Suite 200, EL PASO, TEXAS 79905, Tel. +9-5 800 234 7381

Middle East: see Italy

Netherlands: Postbus 90050, 5600 PB EINDHOVEN, Bldg. VB, Tel. +31 40 27 82785, Fax. +31 40 27 88399

New Zealand: 2 Wagener Place, C.P.O. Box 1041, AUCKLAND, Tel. +64 9 849 4160, Fax. +64 9 849 7811

Norway: Box 1, Manglerud 0612, OSLO, Tel. +47 22 74 8000, Fax. +47 22 74 8341

Pakistan: see Singapore

Philippines: Philips Semiconductors Philippines Inc., 106 Valero St. Salcedo Village, P.O. Box 2108 MCC, MAKATI, Metro MANILA, Tel. +63 2 816 6380, Fax. +63 2 817 3474

Poland: Ul. Lukiska 10, PL 04-123 WARSZAWA, Tel. +48 22 612 2831, Fax. +48 22 612 2327

Portugal: see Spain

Romania: see Italy

Russia: Philips Russia, Ul. Usatcheva 35A, 119048 MOSCOW, Tel. +7 095 755 6918, Fax. +7 095 755 6919

Singapore: Lorong 1, Toa Payoh, SINGAPORE 319762, Tel. +65 350 2538, Fax. +65 251 6500

Slovakia: see Austria

Slovenia: see Italy

South Africa: S.A. PHILIPS Pty Ltd., 195-215 Main Road Martindale, 2092 JOHANNESBURG, P.O. Box 7430 Johannesburg 2000, Tel. +27 11 470 5911, Fax. +27 11 470 5494

South America: Al. Vicente Pinzon, 173, 6th floor, 04547-130 SÃO PAULO, SP, Brazil, Tel. +55 11 821 2333, Fax. +55 11 821 2382

Spain: Balmes 22, 08007 BARCELONA, Tel. +34 93 301 6312, Fax. +34 93 301 4107

Sweden: Kottbygatan 7, Akalla, S-16485 STOCKHOLM, Tel. +46 8 5985 2000, Fax. +46 8 5985 2745

Switzerland: Allmendstrasse 140, CH-8027 ZÜRICH, Tel. +41 1 488 2741 Fax. +41 1 488 3263

Taiwan: Philips Semiconductors, 6F, No. 96, Chien Kuo N. Rd., Sec. 1, TAIPEI, Taiwan Tel. +886 2 2134 2865, Fax. +886 2 2134 2874

Thailand: PHILIPS ELECTRONICS (THAILAND) Ltd., 209/2 Sanpavuth-Bangna Road Prakanong, BANGKOK 10260, Tel. +66 2 745 4090, Fax. +66 2 398 0793

Turkey: Talatpasa Cad. No. 5, 80640 GÜLTEPE/ISTANBUL, Tel. +90 212 279 2770, Fax. +90 212 282 6707

Ukraine: PHILIPS UKRAINE, 4 Patrice Lumumba str., Building B, Floor 7, 252042 KIEV, Tel. +380 44 264 2776, Fax. +380 44 268 0461

United Kingdom: Philips Semiconductors Ltd., 276 Bath Road, Hayes, MIDDLESEX UB3 5BX, Tel. +44 181 730 5000, Fax. +44 181 754 8421

United States: 811 East Arques Avenue, SUNNYVALE, CA 94088-3409, Tel. +1 800 234 7381

Uruguay: see South America

Vietnam: see Singapore

Yugoslavia: PHILIPS, Trg N. Pasica 5/v, 11000 BEOGRAD, Tel. +381 11 625 344, Fax.+381 11 635 777

For all other countries apply to: Philips Semiconductors, International Marketing & Sales Communications, Building BE-p, P.O. Box 218, 5600 MD EINDHOVEN, The Netherlands, Fax. +31 40 27 24825

Internet: http://www.semiconductors.philips.com

Printed in The Netherlands 125102/1200/03/pp8 Date of release: 1998 Jul 03 Document order number: 9397 750 03973

Let's make things better.

Philips Semiconductors

PHILIPS