查询CS2842A供应商 捷多邦，专业PCB打样工厂，24小时加急出货

CS2842A/CS3842A
CS2843A/CS3843A

Off-Line Current Mode PWM Control Circuit with Undervoltage Lockout

Description

The CS284XA, CS384XA provides all the necessary features to implement off-line fixed frequency current-mode control with a minimum number of external components.

The CS384XA family incorporates a new precision temperature-controlled oscillator with an internally trimmed discharge current to minimize variations in frequency. A precision duty-cycle clamp eliminates the need for an external oscillator when a 50% duty-cycle is used. Duty-cycles greater than 50% are also possible. On board logic ensures that V_{REF} is stabilized before the output stage is enabled. Ion implant resistors provide tighter control of undervoltage lockout.

Other features include low start-up current, pulse-by-pulse current limiting, and a high-current totem pole output for driving capacitive loads, such as the gate of power MOSFET. The output is LOW in the off state, consistent with N-channel devices.

The CS384XA series of current-mode control ICs are available in 8 and14 lead packages for surface mount (SO) applications as well as 8 lead PDIP packages.

Absolute Maximum Ratings

Supply Voltage (I_{CC}<30mA) ..... Self Limiting
Supply Voltage (Low Impedance Source) 30V
Output Current ..... ±1A
Output Energy (Capacitive Load) 5μJ
Analog Inputs (V_{FB}, Sense) ..... -0.3V to 5.5V
Error Amp Output Sink Current 10mA
Lead Temperature Soldering
Wave Solder (through hole styles only) ..... 10 sec. max, 260°C peak
Reflow (SMD styles only) ..... 60 sec. max above 183°C, 230°C peak

Block Diagram

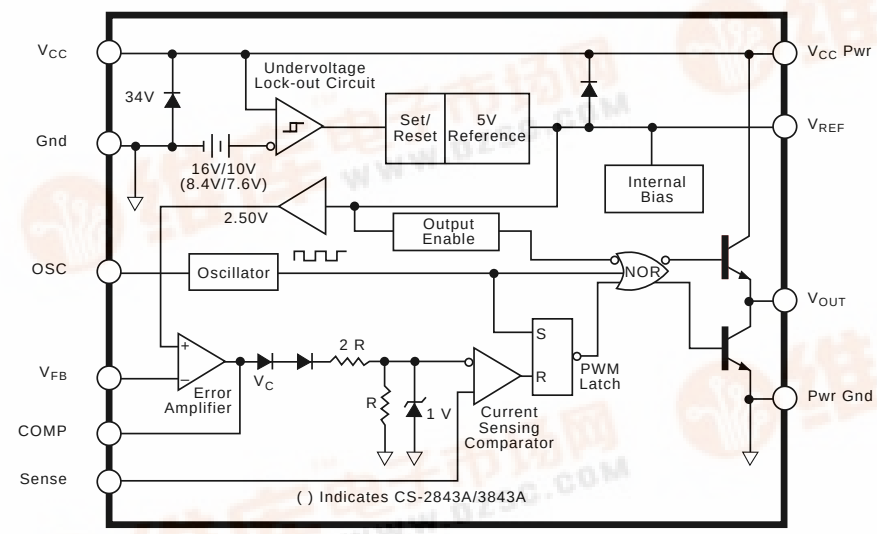

Features

- Optimized for Off-line Control
- Internally Trimmed Temperature Compensated Oscillator
- Maximum Duty-cycle Clamp
- V_{REF} stabilized before Output Stage is Enabled
- Low Start-up Current
- Pulse-by-pulse Current Limiting
- Improved Undervoltage Lockout
- Double Pulse Suppression
- 1% Trimmed Bandgap Reference
- High Current Totem Pole Output

Package Options

8 Lead PDIP & SO Narrow

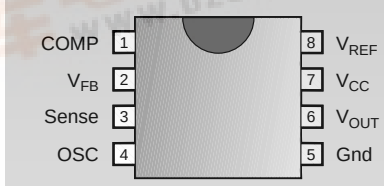

14 Lead SO Narrow

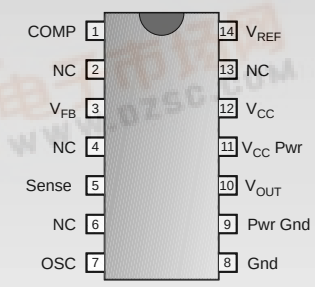

Cherry Semiconductor
Cherry Semiconductor Corporation
2000 South County Trail, East Greenwich, RI 02818
Tel: (401)885-3600 Fax: (401)885-5786
Email: info@cherry-semi.com
Web Site: www.cherry-semi.com

找PDF 维库一下 pdf.dzsc.com

Electrical Characteristics: $-25° \le T_A \le 85°C$ for CS2842A/2843A, $0° \le T_A \le 70°C$ for CS3842A/3843A. V_{CC} = 15V (Note 1); R_T = 680Ω, C_T = .022μF for triangular mode, R_T = 10kΩ, C_T = 3.3nF for sawtooth mode (see Figure 3), unless otherwise stated.

PARAMETER	TEST CONDITIONS	CS2842A/CS2843A			CS3842A/CS3843A			UNITS
		MIN	TYP	MAX	MIN	TYP	MAX	
■ Reference Section								
Output Voltage	T_J = 25°C, I_{OUT} = 1mA	4.95	5.00	5.05	4.90	5.00	5.10	V
Line Regulation	$12 \le V_{IN} \le 25V$		6	20		6	20	mV
Load Regulation	$1 \le I_{OUT} \le 20mA$		6	25		6	25	mV
Temperature Stability	(Note 2)		0.2	0.4		0.2	0.4	mV/°C
Total Output Variation	Line, Load, Temp. (Note 2)	4.90		5.10	4.82		5.18	V
Output Noise Voltage	$10Hz \le f \le 10kHz$, T_J = 25°C (Note 2)		50			50		μV
Long Term Stability	T_A = 125°C, 1kHrs. (Note 2)		5	25		5	25	mV
Output Short Circuit	T_A = 25°C	-30	-100	-180	-30	-100	-180	mA
■ Oscillator Section								
Initial Accuracy	Sawtooth Mode (see Fig. 3), T_J = 25°C	47	52	57	47	52	57	kHz
	Triangular Mode (see Fig. 3), T_J = 25°C	47	52	57	44	52	60	kHz
Voltage Stability	$12 \le V_{CC} \le 25V$		0.2	1.0		0.2	1.0	%
Temp. Stability	Sawtooth Mode $T_{MIN} \le T_A \le T_{MAX}$ (Note 2)		5			5		%
	Triangular Mode $T_{MIN} \le T_A \le T_{MAX}$ (Note 2)		8			8		%
Amplitude	OSC peak to peak		1.7			1.7		V
Discharge Current	T_J = 25°C	7.5	8.3	9.3	7.5	8.3	9.3	mA
	$T_{MIN} \le T_A \le T_{MAX}$	7.2		9.5	7.2		9.5	mA
■ Error Amp Section								
Input Voltage	V_{COMP} = 2.5V	2.45	2.50	2.55	2.42	2.50	2.58	V
Input Bias Current	V_{FB} = 0		-0.3	-1.0		-0.3	-2.0	μA
A_{VOL}	$2 \le V_{OUT} \le 4V$	65	90		65	90		dB
Unity Gain Bandwidth	(Note 2)	0.7	1.0		0.7	1.0		MHz
PSRR	$12 \le V_{CC} \le 25V$	60	70		60	70		dB
Output Sink Current	V_{FB} = 2.7V, V_{COMP} = 1.1V	2	6		2	6		mA
Output Source Current	V_{FB} = 2.3V, V_{COMP} = 5V	-0.5	-0.8		-0.5	-0.8		mA
V_{OUT} High	V_{FB} = 2.3V, R_L = 15kΩ to ground	5	6		5	6		V
V_{OUT} Low	V_{FB} = 2.7V, R_L = 15kΩ to V_{REF}		0.7	1.1		0.7	1.1	V
■ Current Sense Section								
Gain	(Notes 3 & 4)	2.85	3.00	3.15	2.85	3.00	3.15	V/V
Maximum Input Signal	V_{COMP} = 5V (Note 3)	0.9	1.0	1.1	0.9	1.0	1.1	V
PSRR	$12 \le V_{CC} \le 25V$ (Note 3)		70			70		dB
Input Bias Current	V_{Sense} = 0		-2	-10		-2	-10	μA
Delay to Output	T_J = 25°C (Note 2)		150	300		150	300	ns
■ Output Section								
Output Low Level	I_{SINK} = 20mA		0.1	0.4		0.1	0.4	V
	I_{SINK} = 200mA		1.5	2.2		1.5	2.2	V
Output High Level	I_{SOURCE} = 20mA	13.0	13.5		13.0	13.5		V
	I_{SOURCE} = 200mA	12.0	13.5		12.0	13.5		V

Electrical Characteristics: continued

PARAMETER	TEST CONDITIONS	CS2842A/CS2843A MIN	CS2842A/CS2843A TYP	CS2842A/CS2843A MAX	CS3842A/CS3843A MIN	CS3842A/CS3843A TYP	CS3842A/CS3843A MAX	UNITS
■ Output Section: continued								
Rise Time	$T_J = 25°C$, $C_L = 1nF$ (Note 2)		50	150		50	150	ns
Fall Time	$T_J = 25°C$, $C_L = 1nF$ (Note 2)		50	150		50	150	ns
Output Leakage	UVLO Active, $V_{OUT} = 0$		-0.01	-10.00		-0.01	-10.00	μA
■ Total Standby Current								
Start-Up Current			0.5	1.0		0.5	1.0	mA
Operating Supply Current	$V_{FB} = V_{Sense} = 0V$, $R_T = 10k\Omega$, $C_T = 3.3nF$	11	17		11	17	mA	
V_{CC} Zener Voltage	$I_{CC} = 25mA$		34			34		V

PARAMETER	TEST CONDITIONS	CS2842A MIN	CS2842A TYP	CS2842A MAX	CS3842A MIN	CS3842A TYP	CS3842A MAX	CS2843A/CS3843A MIN	CS2843A/CS3843A TYP	CS2843A/CS3843A MAX	UNITS
■ Under-Voltage Lockout Section											
Start Threshold		15	16	17	14.5	16.0	17.5	7.8	8.4	9.0	V
Min. Operating Voltage	After Turn On	9	10	11	8.5	10.0	11.5	7.0	7.6	8.2	V

Notes:
1. Adjust V_{CC} above the start threshold before setting at 15V.
2. These parameters, although guaranteed, are not 100% tested in production.
3. Parameter measured at trip point of latch with VFB=0.
4. Gain defined as:

$$A = \frac{\Delta V_{COMP}}{\Delta V_{Sense}} \; ; 0 \le VSense \le 0.8V.$$

Package Pin Description

PACKAGE PIN # 8L PDIP/SO	PACKAGE PIN # 14L SO Narrow	PIN SYMBOL	FUNCTION
1	1	COMP	Error amp output, used to compensate error amplifier
2	3	V_{FB}	Error amp inverting input
3	5	Sense	Noninverting input to Current Sense Comparator
4	7	OSC	Oscillator timing network with Capacitor to Ground, resistor to V_{REF}
5	8	Gnd	Ground
	9	Pwr Gnd	Output driver Ground
6	10	V_{OUT}	Output drive pin
	11	V_{CC}Pwr	Output driver positive supply
7	12	V_{CC}	Positive power supply
8	14	V_{REF}	Output of 5V internal reference
	2,4,6,13	NC	No Connection

Typical Performance Characteristics

Oscillator Frequency vs C_T

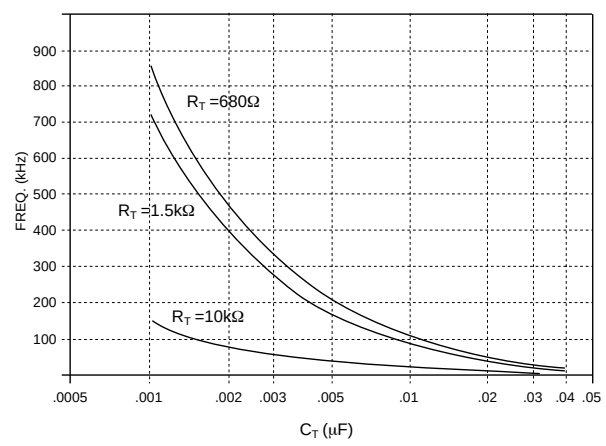

Oscillator Duty Cycle vs R_T

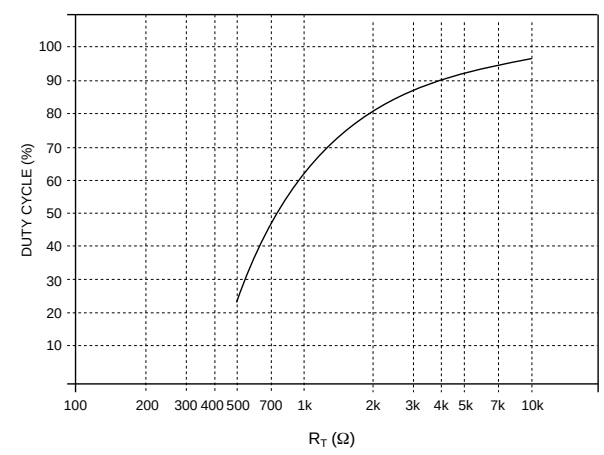

Test Circuit

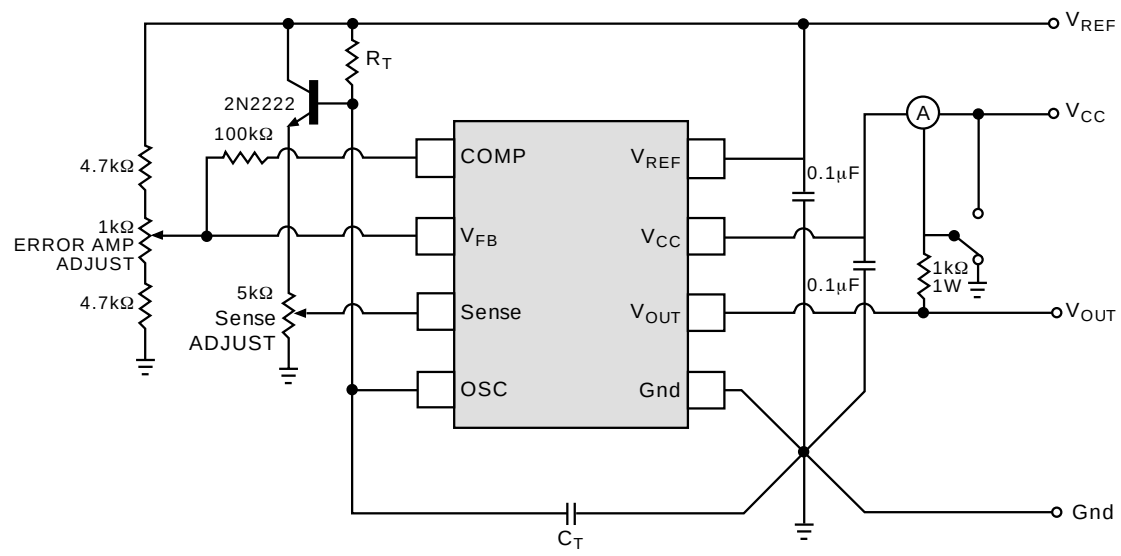

Circuit Description

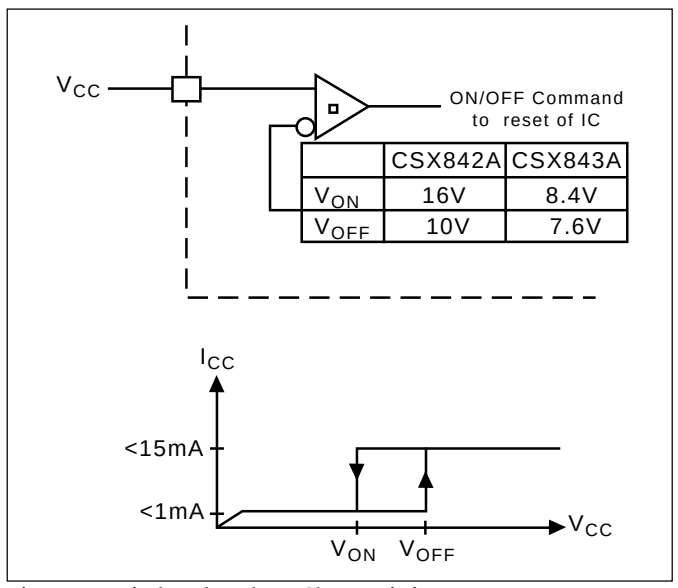

	CSX842A	CSX843A
V_{ON}	16V	8.4V
V_{OFF}	10V	7.6V

Figure 1: Typical Undervoltage Characteristics

Undervoltage Lockout

During Undervoltage Lockout (Figure 1), the output driver is biased to a high impedance state. The output should be shunted to ground with a resistor to prevent output leakage current from activating the power switch.

PWM Waveform

To generate the PWM waveform, the control voltage from the error amplifier is compared to a current sense signal which represents the peak output inductor current (Figure 2). An increase in V_{CC} causes the inductor current slope to increase, thus reducing the duty cycle. This is an inherent feed-forward characteristic of current mode control, since the control voltage does not have to change during changes of input supply voltage.

When the power supply sees a sudden large output current increase, the control voltage will increase allowing the duty cycle to momentarily increase. Since the duty cycle tends to exceed the maximum allowed to prevent trans-

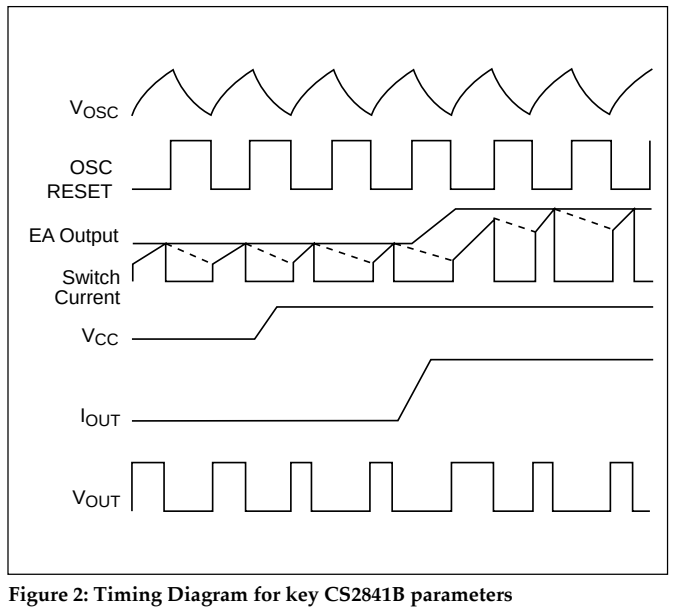

Figure 2: Timing Diagram for key CS2841B parameters

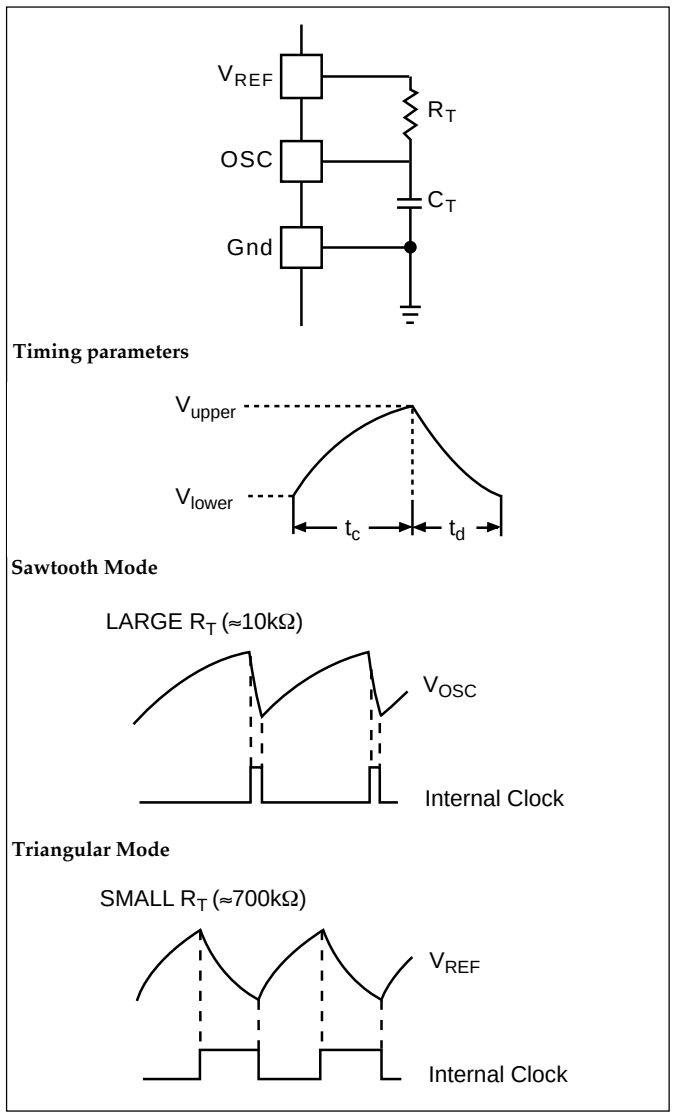

Figure 3: Oscillator Timing Network and parameters

former saturation in some power supplies, the internal oscillator waveform provides the maximum duty cycle clamp as programmed by the selection of oscillator components.

Setting the Oscillator

Oscillator timing capacitor, C_T, is charged by V_{REF} through R_T and discharged by an internal current source. During the discharge time, the internal clock signal blanks out the output to the Low state, thus providing a user selected maximum duty cycle clamp. Charge and discharge times are determined by the formula:

$$t_c = R_T C_T \ln\left(\frac{V_{REF} - V_{lower}}{V_{REF} - V_{upper}}\right)$$

$$t_d = R_T C_T \ln\left(\frac{V_{REF} - I_d R_T - V_{lower}}{V_{REF} - I_d R_T - V_{upper}}\right)$$

Substituting in typical values for the parameters in the above formulas:

$V_{REF} = 5.0V$, $V_{upper} = 2.7V$, $V_{lower} = 1.0V$, $I_d = 8.3mA$

$t_c \approx 0.5534 R_T C_T$

$$t_d = R_T C_T \ln\left(\frac{2.3 - 0.0083\ R_T}{4.0 - 0.0083\ R_T}\right)$$

The frequency and maximum duty cycle can be determined using the Typical Performance Characteristic graphs.

Grounding

High peak currents associated with capacitive loads necessitate careful grounding techniques. Timing and bypass capacitors should be connected close to Gnd pin in a single point ground.

The transistor and 5kΩ potentiometer, shown in the test circuit, are used to sample the oscillator waveform and apply an adjustable ramp to Sense.

Package Specification

PACKAGE DIMENSIONS IN mm (INCHES)

Lead Count	D Metric Max	D Metric Min	D English Max	D English Min
8 Lead PDIP	10.16	9.02	.400	.355
8 Lead SO Narrow	5.00	4.80	.197	.189
14 Lead SO Narrow	8.75	8.55	.344	.337

PACKAGE THERMAL DATA

Thermal Data		8 L PDIP	8 L SO Narrow	14 L SO Narrow	
$R_{\Theta JC}$	typ	52	45	30	°C/W
$R_{\Theta JA}$	typ	100	165	125	°C/W

Plastic DIP (N); 300 mil wide

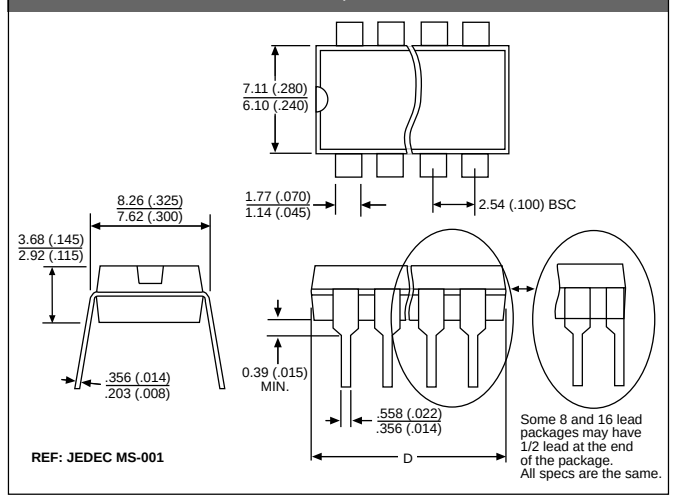

Surface Mount Narrow Body (D); 150 mil wide

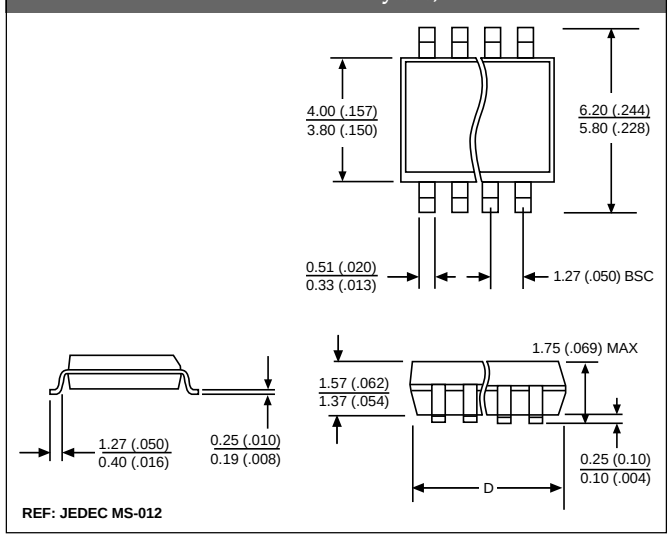

Ordering Information

Part Number	0°C to 70°C	-25°C to 85°C	Description
CS2842ALN8		•	8L PDIP
CS2843ALN8		•	8L PDIP
CS3842AGN8	•		8L PDIP
CS3842AGD8	•		8L SO Narrow
CS3842AGDR8	•		8L SO Narrow *(tape & reel)*
CS3842AGD14	•		14L SO Narrow
CS3842AGDR14	•		14L SO Narrow *(tape & reel)*
CS2843ALD14		•	14L SO Narrow
CS2843ALDR14		•	14L SO Narrow *(tape & reel)*
CS3843AGN8	•		8L PDIP
CS3843AGD8	•		8L SO Narrow
CS3843AGDR8	•		8L SO Narrow *(tape & reel)*
CS3843AGD14	•		14L SO Narrow
CS3843AGDR14	•		14L SO Narrow *(tape & reel)*

Cherry Semiconductor Corporation reserves the right to make changes to the specifications without notice. Please contact Cherry Semiconductor Corporation for the latest available information.

 © 1999 Cherry Semiconductor Corporation