查询CSPRC032供应商

Chip Scale Package (CSP) EMI Filter Network

Features

- Minimal Cross-Talk
- 4 Filter lines per device
- Ultra small foot print
- Silicon substrate
- 0.35mm Eutectic Solder Bumps

Applications

- Cellular Phones
- Cordless Phones
- Internet Appliances
- PDAs
- Laptop Computers

Product Description

Many portable applications frequently demand filtering of signals in the 800-2,700 MHz band. California Micro Devices' unique thin film Flip Chip filters provide a minimum of –30 dB of attenuation over this frequency band. The bump size and pitch of these filters are selected such that the device can be placed directly on a FR4 printed circuit board using conventional assembly techniques. The pin-out for the device features a signal 'flow through' design, allowing optimal signal routing. Ground-bounce and cross-talk are minimized via a die design that provides two solder bump contacts to the common supply connection. The solder bump contacts are a 63/37 Sn/Pb alloy and are nominally 0.35 mm in diameter.

SCHEMATIC DIAGRAM

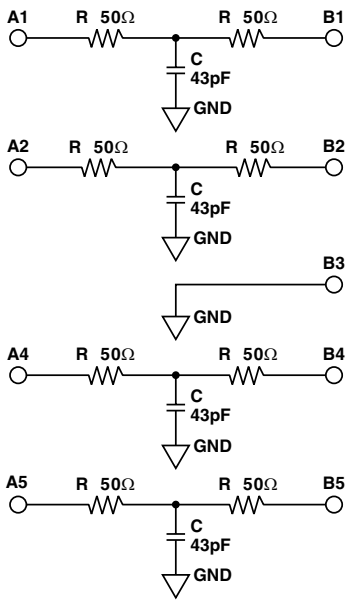

STANDARD VALUES	
Resistor	50Ω
Absolute Tolerance R	±10%
Capacitor	43pF
Absolute Tolerance C	±20%
TCR of Resistors	±100ppm
Operating Temperature Range	–40°C to 85°C
Leakage Current @ ±6V	<1µA
Power Rating/Resistor	25mW

ELECTRICAL CHARACTERISTICS

Filter	R(Ω)	C(pF)	Fc(Note 1)	Fc(Note 2)
RC	50	43	74MHz	74MHz

* Note 1: Calculated with 0Ω Source impedance and infinite Load impedance.

* Note 2: Calculated with 50Ω Source impedance and 50Ω Load impedance.

© 2000 California Micro Devices Corp. All rights reserved.

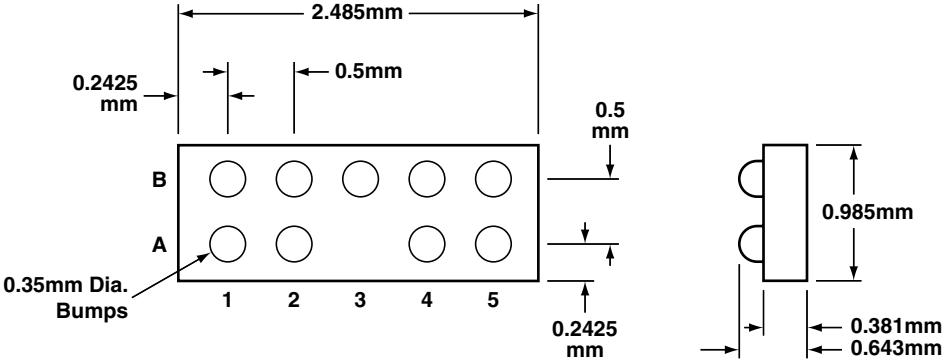

Figure 2. CSPRC032 Package Diagram

PRINTED CIRCUIT BOARD RECOMMENDATIONS	
Pad Size on PCB	0.300mm
Pad Shape	Round
Pad Definition	Non Solder Mask Devined Pads (NSMD)
Solder Mask Opening	0.350mm
Solder Stencil Thickness	0.152mm
Solder Stencil Aperture Opening	0.360mm (sq.)
Solder Flux Ratio	50/50
No Clean Solder Paste	
Bond Trace Finish	OSP (Entek Cu Plus 106A)

CSPRC032 FILTER TYPICAL MEASURED FREQUENCY RESPONSE (S21) MEASUREMENT

The measurement is done with 50Ω-source & 50Ω-load impedance using a HP 8753C Network Analyzer with a HP85047A S-parameter Test Set.

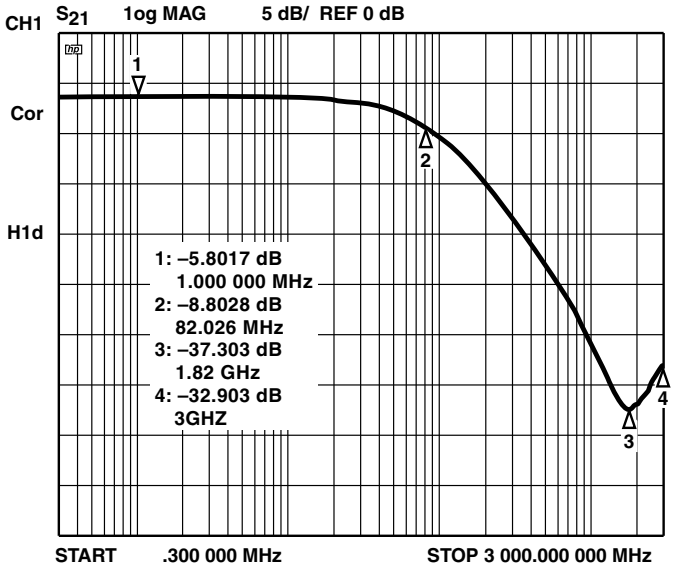

CSPRC032 Filter A2-B2 to GND (A3)

©2000 California Micro Devices Corp. All rights reserved.

Typical Solder Reflow Thermal Profile (No Clean Flux)

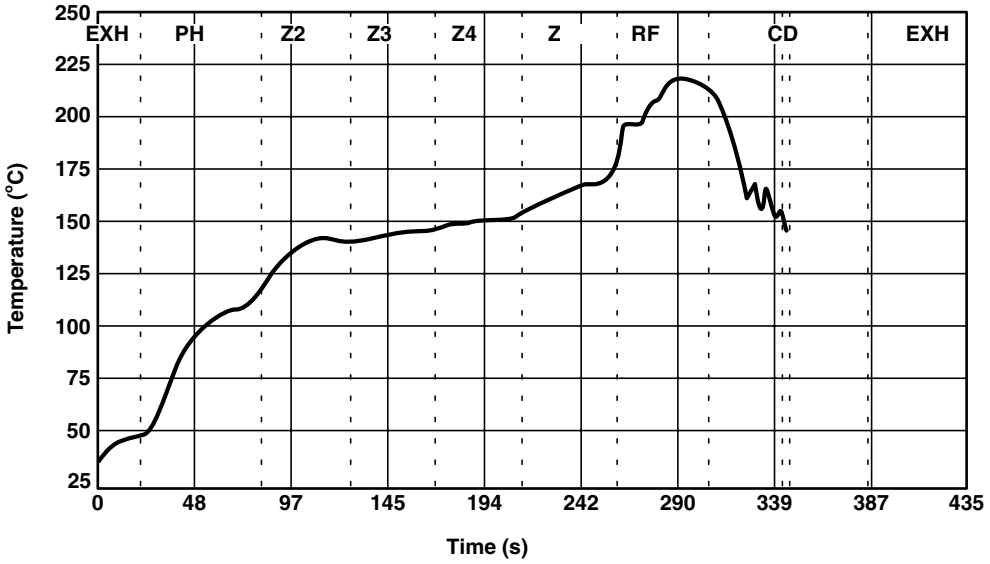

PACKAGE	NON-STANDARD PART ORDERING INFORMATION	
Part Series	Resistor Value (XXX)	Capacitor Value (YYY)
Example (CSPRC032)	500 (= 50Ω)	430 (= 43PF)
	First 2 digits are significant value.Third digit represents number of zeros to follow.	First 2 digits are significant value. Third digit represents number of zeros to follow.

PART NUMBER KEY

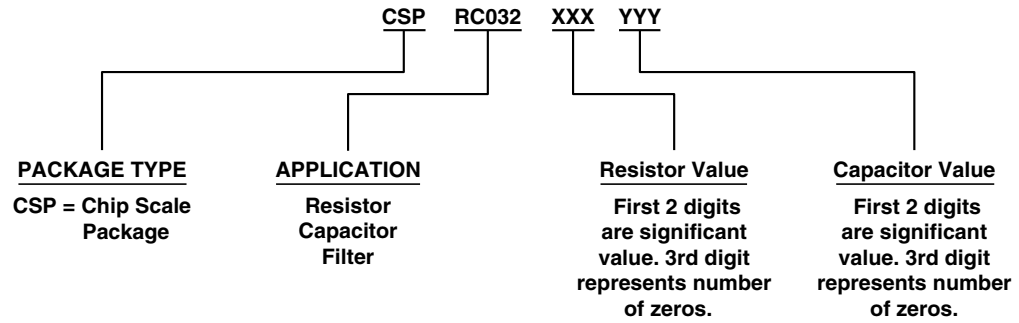

© 2000 California Micro Devices Corp. All rights reserved.